AgEcon SEARCH
RESEARCH IN AGRICULTURAL & APPLIED ECONOMICS

The World's Largest Open Access Agricultural & Applied Economics Digital Library

This document is discoverable and free to researchers across the globe due to the work of AgEcon Search.

Help ensure our sustainability.

Give to AgEcon Search

AgEcon Search
http://ageconsearch.umn.edu
aesearch@umn.edu

*Papers downloaded from **AgEcon Search** may be used for non-commercial purposes and personal study only. No other use, including posting to another Internet site, is permitted without permission from the copyright owner (not AgEcon Search), or as allowed under the provisions of Fair Use, U.S. Copyright Act, Title 17 U.S.C.*

IWMI - NAIP Report 1

WATER POVERTY IN THE NORTHEASTERN HILL REGION (INDIA): POTENTIAL ALLEVIATION THROUGH MULTIPLE-USE WATER SYSTEMS

..... Cross learnings from Nepal Hills

BHARAT SHARMA
M. V. Riaz • D. Pant • D. L. Adhikary • B.P. Bhatt • H. Rahman

IWMI
International Water Management Institute

राकृनप
NAIP

In the northeast region of India, the societal water use is less than 5 per cent of the existing potential. This leads to vast devastation, poor crop yields, constrained livelihood options, malnutrition and drudgery. The region and the households witness 'water poverty' among the water abundance. This report maps the household water poverty in a typical remote village of the northeast, understands the causes for such a scenario and reflects on the past efforts. Local water resource-based Multiple-Use Water Systems, provide water supply both for household and livestock needs and for small high-value agriculture. Additionally, the low-cost systems reduce drudgery, empower women; and improve household income, nutrition and sanitation.

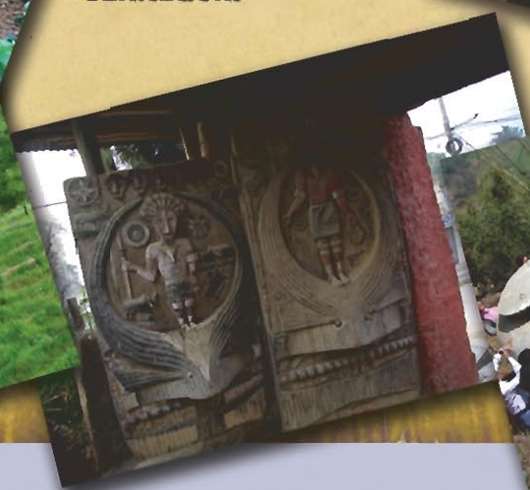

IWMI- NAIP Report 1

WATER POVERTY IN THE NORTHEASTERN HILL REGION (INDIA) : POTENTIAL ALLEVIATION THROUGH MULTIPLE-USE WATER SYSTEMS

.....Cross-learnings from Nepal Hills

BHARAT SHARMA
M. Vimal Riaz, Dhruba Pant,
Deepak Adhikary, B P Bhatt, H Rahman

2010

International Water Management Institute

In collaboration with

Acknowledgements

The authors would like to acknowledge the National Agriculture Innovation Project of the Indian Council of Agricultural Research and the International Fund for Agricultural Development (IFAD) for funding the project on Livelihood Improvement and Empowerment of Rural Poor through Sustainable Farming Systems in Northeast India. We are thankful to Department of Irrigation, Government of Nepal and IDE-Nepal for their collaboration. The authors would also like to thank Dr. Thelma Paris of IRRI for providing the support and suggestions, and Dr. Barbara van Koppen (Project Leader-MUS) and Dr. Deborah Bossio (Theme Leader) of IWMI. Thanks are also due to Dr. S V Ngachan (Director), Dr. K K Satpathy, and Dr. GC Munda of ICAR Research Complex for North Eastern Hill Region, Shillong and Dr. Alema Lao of SASRD, Nagaland University. Help provided by Mr. Nitin Bassi in the initial phase of the project is sincerely acknowledged.

Project : This research study was initiated as part of the project titled " Livelihood Improvement and Empowerment of Rural Poor through Sustainable Farming Systems in Northeast India".

Partners: This study is a collaboration of the following organizations:
International Water Management Institute, New Delhi Office & Colombo, Sri Lanka
Indian Council of Agricultural Research, New Delhi, India
National Agriculture Innovation Project of India, New Delhi
International Development Enterprises- Nepal

Donors : International Fund for Agricultural Development (IFAD)

About the Authors

Bharat Sharma : Head and Senior Researcher, International Water Management Institute, New Delhi Office, NASC Complex, Dev Prakash Shastri Marg, Pusa, New Delhi-110 012, India
(b.sharma@cgiar.org), +91-11-25840811/12,

M.V. Riaz, Graduate student, Institute of Rural Management, Anand, India

Dhruba Pant, Researcher, International Water Management Institute, Kathmandu, Nepal

Deepak Lochan Adhikary, Independent Consultant, Kathmandu, Nepal

B.P. Bhatt, Joint Director, ICAR Research Complex for NEH Region, Nagaland Centre, India

H. Rahman, Joint Director, ICAR Research Complex for NEH Region, Sikkim Centre, India

Citation:

Sharma, B.R.; Riaz,M.V.; Pant, D.; Adhikary, D.L.; Bhatt, B.P.; Rahman, H. 2010. Water poverty in the northeastern hill region (India): potential alleviation through multiple-use water systems - Cross learnings from Nepal hills. New Delhi, India: International Water Management Institute (IWMI-NAIP Report 1). 44p. doi : 3910/2009.200

/water poverty/indicators/ multiple use/ highlands/ drip irrigation/ villages/ tanks/ water storage/ economic aspects/ social aspects/ India/

ISBN: 978-92-9090-715-2

Cover Photo credits : M V Riaz; IDE, Nepal; Steve Mann (ILRI); Bharat Sharma; Irrigation Department, Nepal

Water Poverty in the Northeast Hill Region (India) : Potential Alleviation through Multiple- Use Water Systems

.....*Cross-learnings from Nepal Hills*

Bharat Sharma,
M.V. Riaz, Dhruba Pant, Deepak Adhikary, B.P. Bhatt, H. Rahman

1. The Key Issue

The northeast region of India being highly rich in water resources potential, has not benefitted much from such a natural wealth. The region, endowed with an enormous water potential of about 34 percent of the country's total water resources, represents only 7.9 percent of the total Indian landmass. The per capita and per hectare availability of water in India is highest in this region (Goswami, 2002). However, the societal (both productive and consumptive) water use is less than 5 per cent of the existing potential. The unutilised and excessive water supplies during the rainy season create a mayhem of devastations almost every year with ravaging floods, land slides, soil erosion and other infrastructural failures and miseries and unrest in large parts. Extreme water scarcity during the post-rainy season seriously constrains the farmers' access to a reliable water source and to a meaningful economic activity at the farm and extreme hardships for the household. This aptly presents a 'water poverty' scenario in an otherwise 'water-abundant' region.

Though majority of the population is still dependent upon agriculture, livestock and allied land-based activities, the irrigated and diversified agriculture is an exception rather than the norm. The region is generally under mono-cropping during rainy season (rice, maize, coarse cereals, local pulses etc.) with very low yield levels. Shifting cultivation, also known as 'slash and burn agriculture' (*Jhum* cultivation) is the chief means of livelihood of tribal people in these areas who have evolved this mode of cultivation in response to a difficult terrain and little access to agricultural inputs, including irrigation water. Under the prevailing conditions the vast potential of high value crops (exotic vegetables and fruits, spices and aromatic plants), floriculture, and livestock and poultry remains largely under-exploited. Additionally, large amounts of cereals, pulses and oilseeds and meat need to be regularly imported (unfortunately from water scarce regions) and stocked into the region to ensure food security and respond to the food shortages and exigencies.

Several farm-level water management innovations and traditional practices have been tried in the past namely; integrated watershed management with a water harvesting structure as an integral part, sustainable multi-commodity farming systems, *zabo (ruza)* system of cultivation, bamboo drips, *pani-kheti*, *Apatani* system (Agarwal and Narain, 1997) and more recently storing rainwater in plastic-lined ponds (*Jalkund*) or ferro-cement tanks (Samuel and Satpathy, 2008). Several of these methods have found favor at local and/ or policy level and included into the development programs for the region. As most of these interventions meet only the agricultural water needs (with little effort to integrate the domestic water needs) and generally do not have sufficient supplies when the requirements peak during the non-rainy season, their outscaling and adoption has been limited. It

looks certain that a more appropriate water supply and distribution system should satisfy most of the following criterion:

i. The system should meet both the domestic (including livestock) and small irrigation water needs for high value agriculture.

ii. It shold be flexible, to switch over from domestic to productive use and vice-versa as per the seasonal demands.

iii. The system should be capable of integration with low-cost and water saving precision application methods.

iv. The systems should be simple and low cost and maintenance costs should be small.

v. Above all, the water supply, distribution and use must ensure community participation and acceptance and be gender-sensitive.

The Multiple-Use Water Systems/ Services (MUS) tried successfully in the adjoining Nepal hills in north-western Himalayas and several countries in Sub-Saharan Africa meet most of the above-cited criterion (Mikhail and Yoder, 2009) and has shown great potential for adaptation in the northeast hill region of India. The homestead-scale MUS seeks to meet men's and especially women's multiple water needs for domestic uses in dwelling units and for small-scale enterprises on the adjoining lands or 'homesteads'. These uses contribute directly and indirectly to all important dimensions of human well-being.

Next section of the report briefly explains the water wealth and water woes of the northeast hill region, followed by a discussion on methodology for mapping water poverty and a case study from Lampong Sheanghah village in Mon district of Nagaland. The report then presents the benefits, technique, components and experiences of implementation of a number of Multiple-Use Water Systems in the Nepal hills. Finally, conclusions and recommendations are provided for out-scaling of the MUS to the northeast hill region for ensuring water and livelihood security at the household and community level. This knowledge and experiences also formed part of a specialised cross-learning capacity building initiative organised by International Water Management Institute (March 3-5, 2009 at Kathmandu, Nepal) for a group of farmers, researchers and other government officers from Nagaland and Sikkim states of northeast hill region. The studies form part of the National Agriculture Innovation Project (NAIP)" Livelihood Improvement and Empowerment of Rural Poor through Sustainable Farming System in Northeast India" and has been supported through the funding of NAIP and the Intertnational Fund for Agriculture Development (IFAD).

2. Water Wealth and Water Woes Of the Northeast Region (India)

The North Eastern Region (NER) of India is endowed with rich natural resources of soil, water, and diverse flora and fauna. The seven sister states, comprising the states of Asom, Arunachal Pradesh, Manipur, Megalaya, Mizoram, Nagaland and Tripura alongwith the recently included Sikkim state comprise the northeast region (Fig. 1). The region covers 2,62,179 km^2 which accounts for 7.97% of India's geographical area. The region is characteised by a unique geo-physical, socio-cultural and environmental setting and is

dominated by an intense monsoon rainfall regime, active seismicity and very rich biological and cultural diversity. Because of the very high surface water resources availability amounting to 653 Billion cubic meters (BCM) accounting for 34 % of the country's total surface water resources, the region is also termed as 'Water Tower of India'. Statistically, the per capita and per hectare availability of water in this region is the highest in the country.

Figure 1: Geographical setting of northeast hill region states in India

The Northeast region receives an average annual rainfall of 2,500 mm with variability ranging from 1,200 mm in parts of Nagaland to 2,125 mm in Kamrup district of Asom to 4,142 mm in Tirap district (Arunachal Pradesh) to 11,000 mm in Cherrapunji (Meghalaya, highest at any place in the world). The summer monsoon rains from June to September account for more than 70% of annual rainfall. Intense rainfall activities triggered by cloud bursts cause devastating flash floods and landslides in the region (Goswami, 1992). Snowfall in the NE Himalayas occurs at elevations of 1,500 m and above. There are altogether 612 glaciers in the Brahmaputra basin of which 450 glaciers are located in the Tista sub-basin of Sikkim while the remaining 162 are in the Kameng river sub-basin of Arunachal Pradesh. The pre-monsoon rainfall (March- May) accounts for 25% of annual rainfall and the post-monsoon rainfall (October-December) and winter monsoon rainfall are scanty, limiting the scope for agricultural activities during summer and winter (*rabi*) season. The annual variation in rainfall is wide from one place to another and its duration is most uncertain. Delay in pre-monsoon showers and delay in onset of monsoons leads to serious dislocation and causes great damage to crops (Mishra and Satpathy, 2003). Even during 2009, NE region received worst-ever rainfall deficit in 30 years (till July 20) with Manipur being worst affected recording 67% deficient rainfall, followed by Meghalaya (-55%), Nagaland (-62%), Asom (-34%), Mizoram (-30%) and Arunachal Pradesh (-29%) with Manipur and Nagaland declaring a 'drought' condiction.

The northeasat region, particularly the portions in Asom, witness mayhem of annual floods and erosion every year. These devastating floods in the plains and valley areas bring extreme misery to the inhabitants and shatter the fragile agro-economic base of the region. Floods also cause extensive damages to agriculture, environment, human life and property and thus seriously hamper the economy of the region. Goswami (1998) states that 'floods in the NE region are caused by a combination of natural and anthropogenic factors. The highly potent monsoon regime, weak geological formation, active seismicity, accelerated erosion, rapid channel aggradation, massive deforestation, intense land use pressure and high population growth especially in the floodplain belt, and adhoc flood control

measures are some of the dominant factors that cause and/ or intensify floods in the northeast region'. The flood hazard of as recent as 2004 was the most serious. The excessive precipitation besides causing catastrophic flood hazards in plains and dangerous landslides, also causes excessive leaching losses making the soils impoverished and acidic. Numerous springs, small streams and rivulets and large amounts of continuous base flows suitable to meet water deficits during non-rainy periods largely remain unutilised.

The vast water resources of the region make little contributions towards economic activities. Against an ultimate irrigation potential of about 4.26 M ha in the region, the area presently under irrigation is less than 20 % of the potential. Only 4.3% of existing groundwater potential has been developed so far although availability of groundwater at relatively shallow depth (< 20 m) is very high in the region (Goswami and Das, 2003). Sourcewise irrigation potential developed in the NE region states is given in Table 1. Inspite of the abundant water resources, the ratio of percent irrigated area to net sown area varies from about 5 percent in Asom to 28 percent in Arunachal Pradesh with the average for the NE region as a whole at 10.6 %. This is less than one-fouth of the national average of net irrigated area in the country which currently stands at 43.2 %.

Non-availability of irrigation water, especially during the non-rainy season either discourages farmers to use adequate inputs for crop production or retain the cultivated land as fallow. Even during the rainy season, terminal droughts due to early withdrawal of monsoon are quite common. This leads to poor crop yields and little incentive for diversified or high value agriculture (Sharma, 1996). Assured water supply, though for a limited area, is a pre-requisite for moving up the value chain and sustainable livelihoods. Additionally, non-availability of water for minimal domestic and livestock needs causes water poverty and miseries to the population and is a major contributing factor for spread of a number of malnutrition and sanitation related diseases.

The structure of economy of the states in the region indicates a low level of development. The share of prinmary in the Net State Domestic Products (NSDP) is between 30 and 40% and share of

Table 1: Sourcewise net irrigated area* ('000 hectare) in the northeast region states of India

State	Net sown area	Canals	Tanks	Wells/ Tubewells	Other sources	Total net irrigated area	Percent irrigated area to net sown area
Asom	2,774	33	3	11	93	140	5.0
Arunachal Pradesh	164	-	-	-	46	46	28.0
Manipur	215	-	-	-	48	48	22.3
Meghalaya	229	59	-	-	-	59	25.8
Mizoram	94	15	-	-	-	15	15.9
Nagaland	321	-	-	-	66	66	20.6
Sikkim	110	1	-	-	7	8	7.3
Tripura	280	15	2	9	35	61	21.8
N E Region	**4,187**	**123**	**5**	**20**	**295**	**443**	**10.6**

* (Average over the years 2000 -2006)

Water resources availability: Too-much - too-little syndrome in the Himalayan hilly regions

(Photo credit: Deepak Adhikary, IDE)

agriculture is generally above 20%. Services provided by the government form a substantial driver of consumer demand in smaller states. Agriculture in the region is subsistence oriented as indicated by low consumption of fertilisers, low coverage under irrigation and low yields compared to the national average. Paddy is the main crop of the region. Much agriculture is practised in single season. Where flooding does not damage crops, the cropping is done in *Sali* (*kharif*, rainy) season and in regions affected by floods, crops are taken after the floods recede. Other crops taken in the region include mustard, potato, maize and a wide variety of vegetables but all with very low yields. Hilly states show wide prevalence of horticultural crops such as arecanut, citrus, pineapple, banana and ginger. The region is bulk producer of tea under commercially run tea estates.

In most hilly states, people tend to have backyards or 'homesteads' (termed *bari i*n local language) which grow a number of crops produced mostly for home consumption. These include bamboo, coconut, arecanut, yams, banana and a range of vegetables. Homesteads also support small scale livestock such as pigs, goat and poultry including ducks. Presently, production from these homesteads is highly inadequate to meet the family needs. *These homesteads have the potential to provide main nutrition and livelihoods to the families, especially women if these are provided with small but assured sources of water and related inputs and some markets and thus act as instruments for alleviating poverty.*

To arrive at suitable interventions for improving the access to water resources and alleviate water poverty of the population of the northeast region, it is essential that first we map the water poverty of a representative inhabitation and identify the contributing factors. The next section deals with the methodology and outcome of a village level study on water poverty mapping for a village in Mon district of Nagaland state.

3. Mapping Water Poverty in the Northeast Region

Water poverty mapping (WPM) can be defined as the mapping of water poverty indicators, aggregated to a suitable spatial scale for the purpose of identifying areas of high levels of water poverty, so as to assist in targeting of water related policies and infrastructure to ensure the most effective use of scarce resources (natural, financial, and institutional) to meet the development objectives of the region. Water

poverty mapping combines the strengths of the Water Poverty Index (WPI) as a composite measure of water poverty, with that of poverty mapping and geographic targeting as a way of allocating scarce resources more efficiently than traditional means tested, universal or other methods for identifying the most water-poor households and communities (Cullis and Gorgens, 2006).

The objective of this study is to utilise the Water Poverty Index (Lawrence, Meigh and Sullivan, 2002) to estimate the extent and target the households affected by water poverty. Water Poverty Index and the subsequent water poverty mapping is intended to act as a framework for a policy tool that can be used to monitor the current or future state of water poverty in the region. The details of the components of the water poverty map will vary depending on the definition of water that is being considered and the specific purpose for developing the WPM.

3.1. Water Poverty Index

Water Poverty Index (WPI) is designed as a holistic tool to capture the whole range of issues which relate to water resources availability and their impacts on people (Sullivan, 2005). A conceptual framework of water poverty was developed in consultation with scientists, water practitioners and researchers at IWMI. The result was a definition of water poverty according to five key components:

i. ***Resource****:* The physical availability of water supplied, taking account of the variability and quality of the resource as well as the total amount of water.

ii. ***Access:*** This implies access to water for human use, accounting for not only the distance to a safe source but also the time needed for collection of a household's water and other significant factors. Access means not simply safe water for drinking and cooking, but water for livestock, irrigating crops or for industrial use.

iii. ***Capacity****:* Capacity implies the effectiveness of people's ability to manage water. It is interpreted in the sense of income to allow purchase of improved water, and education and health, which interact with income and indicate a capacity to lobby for and manage a water supply.

iv. ***Use****:* The ways in which water is used for different purposes; it includes domestic, livestock, agricultural and industrial use.

v. ***Environment:*** An evaluation of environmental integrity related to water and of ecosystem goods and services from flora and fauna in the area.

These five components are based on the theoretical foundation that poverty is a relative concept and is defined by capability deprivation leading to a failure to command access to a sufficient water supply to maintain a healthy livelihood. The five components of the WPI recognise that any measure of water poverty must include not only the physical availability of the resource, but also the socio-economic, political and environmental entitlements that govern a person's ability to command a secure and sustainable access to the resource. Water poverty, therefore, encompasses a number of factors such as water availability, access to water, capacity for sustaining access, the use of water and the environmental factors which impact on water quality and the ecology which sustains the water resource.

The methodology for constructing Water Poverty Map and Water Poverty Index are given at *Annexure-I*

The WPI, obtained using the composite approach, has been calculated at the household level in the village of *Lampong Sheanghah* in Mon district of Nagaland. The data used to calculate WPI at the micro level are mainly derived from the household survey conducted for 100 households in the village. Each of the 5 WPI components listed above has been obtained by aggregating a set of sub components again by using the composite approach. In other words, each of the five components forming the WPI is itself an index.

For constructing the Water Poverty Index of *Lampong Sheanghah* village, 21 indicators were selected to represent the five key components of the WPI. These indicators and the weightings given to them are provided in Table 2. The weightings are based on the interactions with the villagers and the discussions had with other researchers during the course of the collection of data for the interview schedule. All the components were given equal indicator weighting of 1.

3.2. Data Sources

The required data for the study was obtained through a primary survey of 100 households out of a total of 109 households in the village of *Lampong Sheanghah* in Mon district of Nagaland using detailed face to face 'Interview Schedule' and secondary data from the district authorities. Additional data was collected through PRA (Participatory Rural Appraisal) tools conducted among the villagers and one-on-one interviews with key resource persons in the village. Minor changes were made in the interview schedule after a pilot testing of the schedule was done in 4 households. The list of household heads obtained from the local church was used as a sample index for carrying out the survey. The main household survey was conducted for 15 days with the assistance of two enumerators fluent in *Nagamese*- the local dialect and Hindi. Interview schedule had a total of

Table 2: Water Poverty Index component indicators and weightings

Component	Component weighting	Supporting variables used to calculate the key component indicators	Data source
1. Resource	0.5	The quality and capacity of the resource tank	Participatory Rapid Appraisal
2. Access	2	• Distance to primary water source • Distance to alternate supply of water • Total amount of water collected • Total time spent in collecting water • Per capita income	Interview Schedule
3. Capacity	1	• Members with secondary education or more • Members affected with water related diseases • Child mortality in the household • Assets owned by the household	Interview Schedule
4. Use	1	• Livestock owned by the household • Water for domestic use • Water for livestock use	Interview Schedule
5. Environment	0.5	• Annual income from firewood • Annual income from bamboo canes • Households using forest for grazing the cattle	Interview Schedule

13 Sections (household, demography, health status, assets, access to infrastructure, land tenure, land use patterns, access to water, annual income, household consumption, impact of external and internal shocks, ecosystem services).

3.3. Area Profile

The study was conducted in *Lampong Sheanghah* village of Mon district in the state of Nagaland in India. The geographic location of northeast region is strategically important as it has international borders with Bangladesh, Bhutan, China, Myanmar and Tibet. The rich natural beauty, serenity and exotic flora and fauna of the area are invaluable resources for the development of eco-tourism. The region has a high concentration of tribal population. The states of Arunachal Pradesh, Meghalaya, Mizoram and Nagaland are mostly inhabited by a number of native tribes. Each tribe has its own distinct tradition of art, culture, dance, music and life styles. The numerous fairs and festivals celebrated by these communities and their friendly nature are irresistible attractions for the visitors.

3.3.1. Nagaland

Among the northeastern states, Nagaland stands out as a land of diverse tribes, systems of governance, cultures, sheer colour and variety. As its 16 major tribes hold their festivals each calendar month of the year, Nagaland is often referred to as the 'land of festivals'. Nagaland represents sociological and anthropological gold mines because it is still scientifically unexplored. The state is bounded by Asom in the west, Myanmar on the East, Manipur in the south and Arunachal Pradesh and part of Asom on the north. It lies between $25^0$6' and $27^0$4' northern latitudes and between $93^0$20' and $95^0$15' eastern longitudes (Figure 1).

Nagaland attained statehood in December 1963 and became the 16th state of the Indian union. The state has an area of 16,579 km^2 (which constitutes 0.5% of the country's geographical area) with a population of 19,88,636 (0.2% of the country's population) as per 2001 Census. The number of households in the state was 149,000 in 1981, which increased to 217,000 in 1991. The state is predominantly rural, with 82.3 percent of the population living in villages, generally situated on high hilltops or slopes overlooking verdant valleys. Till January 2004, Nagaland consisted of eight administrative districts, with 52 blocks, nine census towns and 1,286 inhabited villages. Each district generally has predominant concentration of one of the major/ minor tribes of the state, making the districts distinct in their socio-political, traditional, cultural and linguistic characteristics. Of the eight districts, Tuensang is the largest, occupying 25.5 percent of the total area of the state, followed by Kohima with 18.79 percent. The Naga Hills run through this small state, which has *Saramati* as its highest peak at a height of 12,600 ft. The main rivers that flow through Nagaland are *Dhansiri, Doyang, Dikhu* and *Jhanji.* The terrain is mountainous, thickly wooded, and cut by deep river valleys. There is a wide variety of plant and animal life. Nagaland has a monsoon climate with generally high humidity; rainfall averages between 1,800 and 2,500 mm/ annum.

The Nagas, inhabitants of Nagaland, are said to belong to the Indo-Mongoloid stock, a race whose presence was first noted ten centuries before Christ, at the time of the compilation of the Vedas. The Nagas form more than 20 tribes, as well as numerous subtribes, each having a specific geographic distribution. Though sharing many cultural traits, these tribes have maintained a high degree of isolation and lack cohesion as a single people. The *Konyaks* are the largest tribe, followed by the *Aos, Tangkhuls, Semas,* and *Angamis*. Other tribes

include the *Lothas, Sangtams, Phoms, Changs, Khiemnungams, Yimchungres, Zeliangs, Chakhesangs (Chokri)*, and *Rengmas*. The principal languages are *Angami, Ao, Chang, Konyak, Lotha, Sangtam,* and *Sema.*

Weaving is a traditional art handed down through generations in Nagaland. Each of the major tribes has its own unique designs and colours. Tribal dances of the Nagas give us an insight into the inborn reticence of these people. Some of the important festivals are Sekrenyi, Moatsu, Tuluni and Tokhu Emong. The traditional Naga religion is animistic, though conceptions of a supreme creator and an afterlife exist. Nature is seen to be alive with invisible forces, minor deities, and spirits with which priests and medicine men mediate. In the 19th century, with the advent of British rule, Christianity was introduced, and Baptist missionaries became especially active in the region. As a result, the population now is predominantly Christian.

Nagaland is predominantly a rural state. More than four-fifths of the population lives in small, isolated villages. Built on the most prominent points along the ridges of the hills, these villages were once stockaded, with massive wooden gates approached by narrow, sunken paths. The villages are usually divided into *khels,* or quarters, each with its own headmen and administration. Dimapur, Kohima, Mokokchung, and Tuensang are the only urban centres with more than 20,000 people.

3.3.2. Mon district

Mon district is the northernmost district of Nagaland. It is bounded by the state of Arunachal Pradesh to its north, Asom to its west, Myanmar to its east, Longleng District to its south-west and Tuensang District to its south. The town of Mon is its district headquarters.

This district is the home of the Konyak Nagas and it is interesting to see tattooed faces wearing feathers. Konyaks are adept artisans and skilled craftsmen. Here one can find excellent wood carvings, *daos* (machetes), guns, gunpowder, head brushes, headgear, necklaces, etc. made by these artisans and craftsmen. The most colourful festival of the Konyaks is the "*Aoling Monyu*", which is observed during the first week of April every year.

Mon town, the district headquarters, is situated at an altitude of 897.6 m above sealevel. It is about 357 km away from Kohima, the state capital. Even though a civil administration runs the day-to-day affairs of the district, Mon district is actually ruled by tribal chiefs called *Angs*. These *Angs* control different areas of Mon district. Basically, the word of an *Ang* is law in these parts. Nobody questions his authority. Mon is the only district in Nagaland to have this unique institution of *Angship*. His succession is hereditary in nature.

Agriculture is the main occupation of the people by way of *Jhum* cultivation. A few people in some areas do permanent cultivation near the riverbanks. Besides, handicrafts like weaving, basket making, cane and bamboo works, headgears, spears and *Daos* (Naga knives), leather-shields, etc. are popular but generate very low incomes. Some of the traditional handloom products are shawls, ladies' *Mekhelas* (wrap-around), waistcoats, and ties, bracelets, necklaces etc. made of beads. Further details on Mon district are given at Table 3.

3.3.3. Village profile: Lampong Sheanghah

Lampong Sheanghah village is located 12 km from Mon Town in the Mon district of Nagaland (Figure 2). The name 'Lampong Sheanghah' means 'village at junction' and it lies on the road leading towards

Table 3: Details of Mon district (Nagaland, India) at a glance

Area	1,786 km^2
District headquarters	Mon (Altitude = 897.64 m above sea level)
Population	2,59,604 (Provisional Census 2001)
Density of population	145 per km^2 (Provisional Census 2001)
Sex ratio	881:1000 (Females per 1000 males)
Literacy rate	42.25 % (Male: 46.7 %; Female : 37.1%)
Decennial growth of population	73.42 % (Provisional Census 2001)
Average annual rainfall	Ranges from 2000 mm to 3000 mm
Average temperature	24.4 degree Celsius
Highest peak	Shawot (Altitude = 2,414 m above sea level)
Important rivers/rivulets	Dikhu Tizit, Tehok, Tekang, Tapi, Kaimang, Yityong, Telangsao, etc.
International trade centre	01 (Located at Longwa – 59 km from Mon district headquarters)
Rural development (RD) blocks	06 (Mon, Chen, Wakching, Tizit, Tobu, Phomching)
Number of hospitals (Govt.-run)	02 (Mon: 50-bedded, Wakching: 06-bedded)
Number of recognised villages	113
Number of schools	194
Number of colleges	01 (Wangkhao Govt. College, Mon)

Mon town. The village like many other villages in Mon district is largely an unexplored area having a 100% tribal population. Developmental activities have been undertaken only in the last few years in the village.

3.4. Socio-Economic Characteristics of Village *Lampong Sheanghah*

The place where Lampong Sheanghah is presently located was a very thick forest even in the late 1800's. There was no human settlement here. The whole area was owned by the Konyak tribe which was settled in the far off village of Mon. The first settlement happened around the year 1892 when 18 households settled here. The present population in the village are mostly descendants of these 18 families.

3.4.1. *History about Konyaks Tribe*

The Konyaks were a feared tribe since they had the reputation of being head hunters, but all this changed drastically with the advent of Christianity and the entry of missionaries in the area. The missionaries worked to bring the people towards the mainstream society. Due to their effort, the population in the village and surrounding areas is exclusively Christian. Since first introducing education, the churches have continued to contribute very significantly to education, health and human resource building in

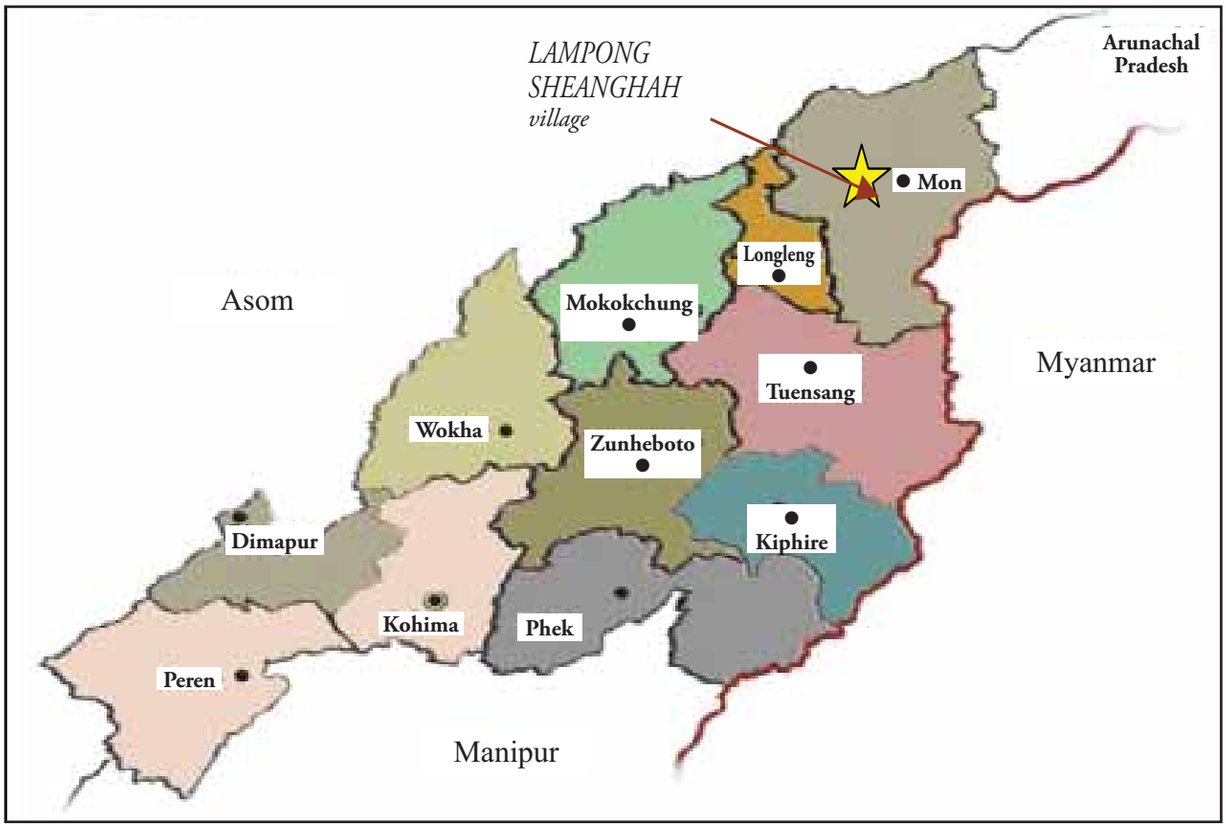

Figure 2: Map showing location of Mon district and the project site in the Nagaland state

Some typical faces of Naga rural population and a household

(Photo credits: Vimal Riaz and Steve Mann (for Naga youth)

Nagaland. In the traditional Konyak society, the *Ang* or the chief was the supreme head of the village. He was considered sacred and his word was taken as law. Frequently, the specific issues would be passed down to the *khels,* clans and families before the *Ang* could come to a decision. '*Khel*' is a distinct Naga institution that brings together several clans within the village community. A village usually has two or three *khels* although there could be more. Membership of a *khel* is decided by birth/heredity. Although informally organised, with elders playing the prominent roles, this was the most important and effective institution in village governance. No village decision could be taken without the inclusion and approval of all the *khels* in the village. The *khel* also had power to overrule individual clan decisions although this was avoided because of the harmful consequences for *khel* conflicts. This is so even today despite the growth of so many community level organisations/groups and the over-arching authority of the government. Lately, the authority of the *Ang* has been reduced drastically. This is due to the advent of democratic thinking among the community. But still, in certain internal disputes, the *Ang's* word is taken as final.

With the advent of democracy, the Village Council has come into prominence than any other institution. The Village Council at *Lampong Sheanghah* consists of 13 members and a Village Council Chairman. The tenure of Village Council is for five years. Village Council members are chosen by villagers in accordance with the prevailing customary practices and usages. Hereditary Village Chief, *Ang* is an ex-officio member with voting rights. The Village Council has special powers to maintain law and order and administer justice within the village limits in accordance with the customary laws and usages as accepted by the canons of justice established in Nagaland. For the purpose of decentralisation and to implement developmental work in the village, the Village Development Board has also been set up. The Village Development Board formulates development priorities for the village, prepares action plans and executes them, using the village community or other funds. All residents of the village are members of the General Body of the Village Development Board. Two General Body meetings are held in a financial year, where the Secretary of the Board presents his reports, along with detailed audited financial statements.

The Lampong Sheanghah Village is divided into 5 colonies or clusters; (a) Upper colony (*Ching Kho*), (b) Middle colony (*Ching Tan*), (c) Lower colony (*Ching Chong*),(d) New Side colony (*Ching Lan*), and (e) New Upper colony (Fig. 3). Even though the villagers claim otherwise, the distribution of households in these colonies seems to be based on the clan that one belongs to. There are 13 clans within the village; *Ang, Langsym, Wang Nao, Wangsa, Khaman, Naham, Nyemam, Wangsu, Khanlau, Tomkhu, Wanglang, Longnye and Gamma.*

The *Ang's* clan is regarded as the most supreme of all the clans. The *Angs* do not sit with members of other clans to eat. They will not touch others' food or eat food touched by others. There are even certain restrictions and regulations on marriage among the clans. Even though such a large number of clans exist in the village, Lampong Sheanghah is a relatively peaceful village when compared to its neighbours. The only instances of violence in the village are when the warring underworld groups from the neighbouring country of Myanmar occasionally clash over the collection of money from the villagers. The villagers are made to compulsorily offer Rs. 500 or Rs.1,000 (in case of well-off households) to these underground gangs operating from Myanmar. In addition to the money, they are also being provided with food and other provisions on a yearly basis. In case of families who default on this, they are dealt with force.

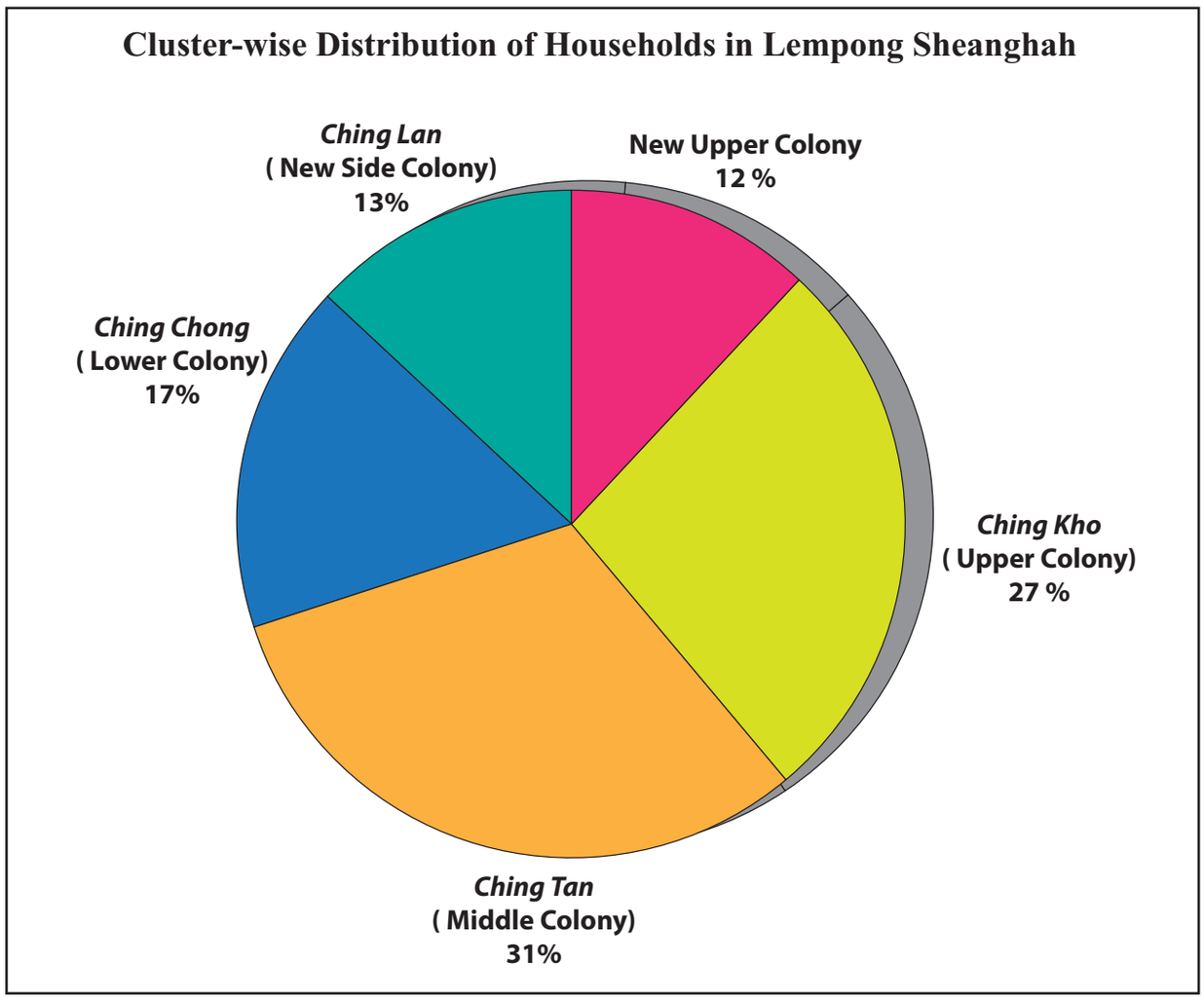

Figure 3: Cluster-wise distribution of households in Lampong Sheanghah village, Mon district, Nagaland

(Source: Household survey by the authors)

3.4.2. *Demography of the village*

According to the Census (2001), the total population in the village is 873. Out of this, 466 are men and the rest 407 are women. The literacy rate is 48.1%. Further details of the village are given at Table 4.

As is evident from the data, the village has not been able to initiate permanent/ settled agriculture and most of it is only under *Jhum*- 'slash and burn agriculture'. As discussed in later sections, the productivity levels from the *Jhum* fields were extremely low. The only productive spots in the village were homestead gardens which could meet very little of the daily requirements of vegetables, fruits, spices or add to the livelihoods. The village did not have a source of irrigation though a number of small rivulets/ springs were available in and around the village. Recently, drinking water supply was made available to the village through efforts of World Vision -a religious NGO in the district.

3.4.3. Health

The family size of the households in Lampong Sheanghah varies from 2 to 14 members. The average size of a household is 8 members. This high family size could be attributed to the fact that the villagers

Table 4: A snapshot of village Lampong Sheanghah, Mon district, Nagaland, India

Main workers	20.6%
Unemployed	18.4%
Cultivators	46.7%
House hold industries	8.9%
Others	44.4%
Total households (as on 2005)	115 (local tax paying)
Households willing to do manual work	115
Khel	2 (*Ching Chun, Ching Kho*)
Morung	1 (*Shangle Po*)
Jhum sites	8 (Mankong, Yankhan, Wanma, Khemo, Nyaman, Nyakho, Tanam, Long Nyah.)
Jhum cycle	Year of use: One year; Year of fallow: 7 Years
Households undertaking only *Jhum* cultivation	114
Households doing permanent cultivation	Nil
Household doing permanent and *Jhum*	1
Non cultivating households	Nil
Land use: Under terracing Under horticulture Under social forestry Under *Jhum*	Nil Nil 600 acre (243 ha) 1,000 acre (405 ha)
Crops in *Jhum*	Paddy, millets, banana, orange, maize, yam, ginger, king-chilly, pumpkin, cucumber, bean, jackfruit

are of the view that a bigger family size is always better. The sex ratio at Lampong Sheanghah village is 115.24 with a total of 378 males and 328 females . The village has only one dispensary, that too non-functional. A lady compounder is present in the village, but for all practical purposes, the sick have to be taken to Mon town, Asom, Dimapur or Kohima. Due to this dismal condition of health services in the village, the prevalence of diseases is very high (Fig. 4). Several of these diseases are water borne and reflect the state of water poverty. The child mortality rate in the village is also very high. The absence of health services is evident from the fact that a majority of the villagers attribute the death of their children to 'evil spirits'. Malnourishment is also highly prevalent in the village with a majority of the children being underweight. This reflects the non-availability of pulses, vegetables and other sources of nutrition in the daily intake.

All the households in the village have some sanitation facilities within their household premises. This reality is due to the efforts taken by the church and the NGO- *World Vision* which is operational in the

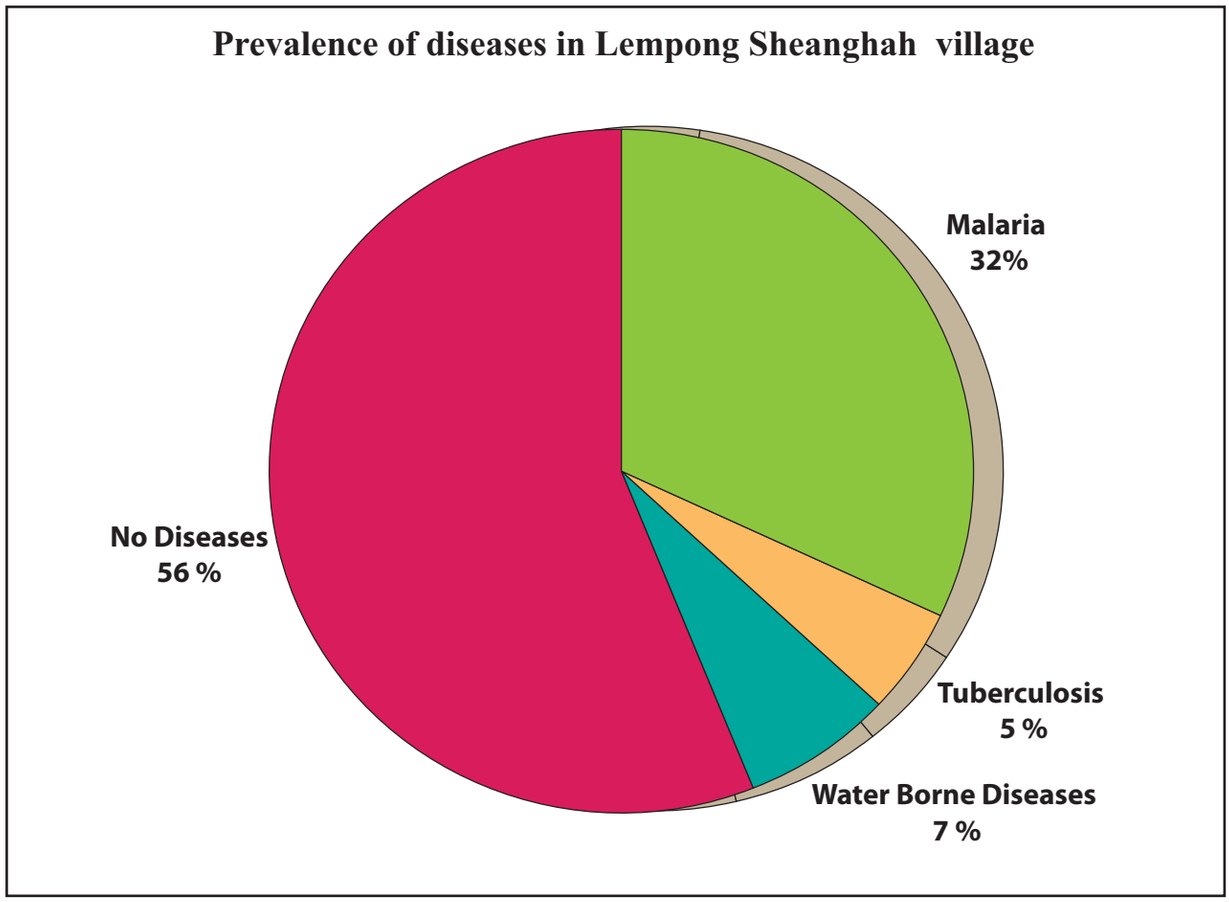

Figure 4: Number of households with sick members in the Lampong Sheanghah village.

*(**Source:** Household survey by the authors)*

village. The NGO also conducts regular health camps in the village to raise awareness regarding various health issues in the area.

3.4.4. Education

The illiteracy level (adults over the age of 15 who have never been to school) in the village is 30% (Fig. 5). There are only two schools in the village, one government run and the other run by Mr. Wango- a philanthropist in the village. The government school has classes only up to standard 5 and the private school has classes up to standard 8. The importance of literacy is slowly catching up in the village and almost all children of school going age are sent to schools.

3.5. Agriculture

Rainfed Agriculture is the main livelihood activity of the people of *Lampong Sheanghah*. The major crops grown in the village are paddy, maize, millets and other vegetables. All the households in the village mainly follow *Jhum* or shifting cultivation. Since all the agricultural land in the village is predominantly on hill slopes and follows practices of *Jhum* cultivation, the productivity of the land is relatively very low compared to other parts of the country. Improved agricultural practices like terrace cultivation, use of fertilisers and pesticides, ploughing, use of farm implements and irrigation are not

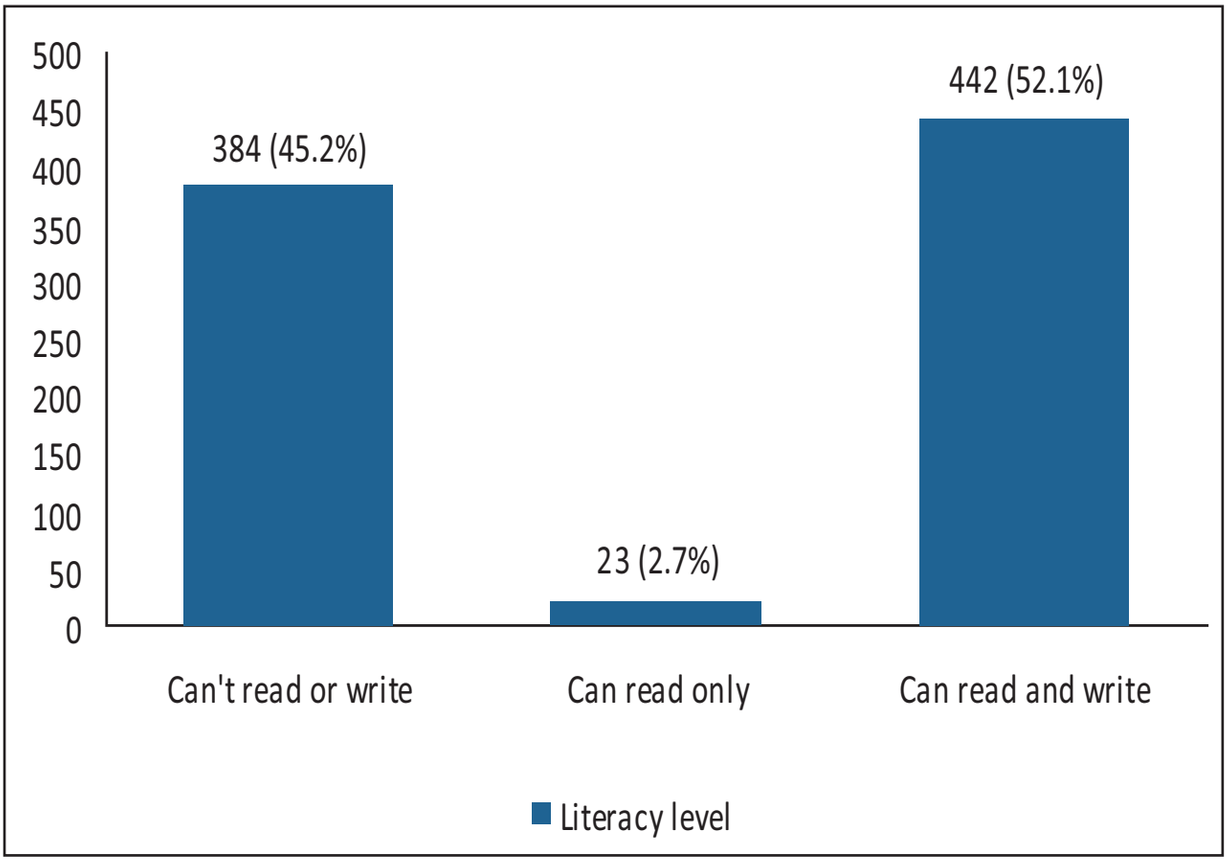

Figure 5: Literacy level in Lampong Sheanghah, Mon district, Nagaland

prevalent in this area. This is surprising, considering the fact that the vast tracts of land near Kohima-the capital of Nagaland is under terrace cultivation. Around 55% of the households in the village have kitchen gardens varying in area from 15 m^2 to 5,200 m^2. The average area of kitchen garden (homesteads) is around 100 m^2 and the major vegetables grown in these gardens are onions, garlic and other green leafy vegetables. Number of households providing irrigation to these kitchen gardens is very negligible and as such productivity is low and hardly meets requirements of a large family. With an assured water supply and other inputs, these small pieces of land have the potential to be converted into highly productive economic units to meet family requirements and also surplus for the markets.

3.5.1. Jhum cultivation

The predominant form of agriculture in the area is *Jhum* cultivation or shifting cultivation (slash and burn agriculture). This form of cultivation has been devised over generations through the innate experience and knowledge gained by the local tribes over land, labour, environmental resources available and the cropping/food requirements. Though often considered primitive and unproductive, *Jhum* is a complex agricultural system that is well adapted under certain conditions, which requires exhaustive comprehension of the environment to succeed. The major challenge continuing to face Nagaland is how to adapt its land use pattern and production systems to the increased population and changing lifestyles, making them biologically and economically sustainable. Shifting cultivation covers over 73 percent of the total arable area of the state. It is mostly concentrated in the districts of Mokokchung, Tuensang,

Sites of Jhum cultivation around Mon, Nagaland: frequently exposing fragile soils to intense rains

(Photo credits: Vimal Riaz and Steve Mann(for red soil Jhum)

Wokha, Zunheboto and Mon. Efforts made under Nagaland Empowerment of People through Economic Development (NEPED) has demonstrated some good alternatives.

Jhum, or shifting cultivation, is characterised by shifting of the primary site of cultivation in cycles, the choice of crops influenced by local needs, experience and availability of planting materials locally. Burning of *Jhum* fields is considered to be one of the most important operations for the success of shifting cultivation. Proper burning of field requires a good deal of skill, knowledge, and expertise and is believed to keep the area weed-free for a long period. It is also believed that burning adds more nutrients to the soil, enhances fertility, and reduces the time required for de-weeding. Special care is taken to ensure that the fire does not spread into adjoining forests. This is done by clearing an area of about 5 m between the cleared *Jhum* and the forest, normally a week before the burning operation. After burning, the poorly/partially burnt plants, logs and vegetations are collected and put in piles at one place and then burnt again. This secondary burning site makes a good nursery bed. This practice, particularly the burning of forests, is critically viewed because of its possible impact on the land and environment.

3.5.2. Cultivation process followed

Prior to the commencement of sowing, the village priest would be invited to initiate the formal sowing on any day after the tenth day following the new moon. Dibbling and broadcast methods of sowing are generally practised by farmers in *Jhum*. Naga farmers consider inter-culture as one of the most essential operations for the success of *Jhum* cultivation, in which weeding is an important aspect. The use of common salt as weedicides is popular in shifting cultivation.

In the *Jhum* fields, harvesting is usually a continuous process and lasts almost the whole year. Many crops, especially vegetables, sown before and during the sowing of the main crop, mature early and are harvested continuously. The main crop is usually harvested sometime in September-October. Once the primary crop is harvested in October, the field is rested for a very short period. And then it is cleared again for the second year crop. Normally farmers cultivate for two years after which the land is left

fallow for 7–9 years. The fallow period used to be 15–20 years but because of pressure of land and population the average *Jhum* cycle in recent years has reduced to 8 and even 5 years in some areas.

3.5.3. Cropping pattern in Jhums

The crops sown by the shifting (*Jhum*) cultivators of the region are based on tradition. Mixed cropping is the main cropping system. In mixed cropping system crops are sown in irregular fashion or random planting. There are no definite crop mixtures. Every cultivator follows his own system of crop combination according to his family requirements. But, the majority of farmers in the village grow rice as the main crop and along with it grow maize, millets and other vegetables (mainly *Taro)* as mixed crops. Here, *Jhum* farmers normally grow as many crops as possible, as decided by the community.

3.5.4. Economic yield pattern under Jhum

Though specific data could not be collected on the economic yield under shifting cultivation, production is used as a proxy for looking at it from the viewpoint of benefits generated. Since the people in the village do not have a measure of their land nor the production, the land ownership and the area of land sown have been identified by pointing out to the school playground which was approximately 1 acre in area and using it as a reference point. Even the production has been identified by helping them recall number of baskets of grains they have carried home. Each basket weighs approximately 14 kg when filled with grains. The above methods are not foolproof and necessary corrections have been made wherever applicable to make the data as close to actual values as possible.

3.5.5. Animal husbandry

Animal husbandry in *Lampong Sheanghah* includes rearing mainly pigs and cattle. Forty-five percent of the households in the village are active in pig rearing. Pigs are generally kept in enclosures constructed near the house. They are fed with household waste, agricultural by-products and maize which are all boiled together and fed to the animals. Fully grown pigs are sold for anything between Rs 8,000 and Rs 15,000. About 34% of the families in the village rear cattle. Cattle in the village are reared mainly for meat and not for milk; even the cow dung is not used as manure. Cows and buffaloes are allowed to graze in the forest during the day. They are not provided any feed from the households. Since the cattle are left unattended, there have been instances of them being stolen or killed in accidents on the road.

Most households (about 71%) also reared poultry. The birds are kept solely for the purpose of meat and not for eggs. Since chicken is expensive in these parts, poultry is a good supplement to regular income for the households. Some of the households keep ducks instead of hen as they fetch a better price in the market. ICAR- Regional Centre, Nagaland had distributed live chicken (Kuroiler breed) to a large number of households for rearing, but a majority of them died due to disease.

Pig rearing close to the homesteads is an important economic activity for the Naga households

(Photo credit: Steve Mann, ILRI)

3.6. Agriculture Research and Demonstration Site at the Village

ICAR-Regional Centre, Nagaland along with the consortium partners is working in Lampong Sheanghah Village as part of the NAIP (National Agricultural Innovation Project) supported Project on '*Livelihood Improvement and Empowerment of Rural Poor through Sustainable Farming System*'. The project has made a great deal of progress considering the short span of time that it has taken since inception. The major interventions undertaken in this site include the following:

i. Terracing for *Panikheti* (Terrace cultivation)
ii. Irrigation channels for water distribution and application
iii. Two water harvesting structures (Dug-out ponds)
iv. Plantation of horticultural and silvicultural trees and vegetables
v. Cultivation of suitable varieties of paddy, maize, sweet potato and cassava
vi. Two pig rearing units
vii. Five poultry rearing units

Since the site is located on steep slopes of hills that are characteristic of the region, terraces have been constructed under the project for the cultivation of crops. This method of cultivation may in future be a substitute for the *Jhum* cultivation (Shifting cultivation) that the people presently follow.

Irrigation channels have also been constructed which help in providing irrigation to the various levels of terraces along the slope. This shall help in higher production per unit of land. Two water harvesting

NAIP-ICAR experimental site for improved agricultural practices and irrigation

(Photo credit: Bharat Sharma)

structures have been constructed at different levels in the site to act as a reservoir of rainwater, but suffer due to insufficient dimensions and delayed maintenance. There is an urgent need to increase the dimensions of these structures and also to build a few more in this site especially at the top for collection of storage water for use during exigencies. Plantation of several horticultural trees like peach, lemon, mandarins and silvicultural trees like *Hollock* has also been done. The terraces have been planted with rice, maize, etc. and cassava and sweet potato have been planted along the slope. The villagers find the demonstrations highly innovative and interesting and having high potential of livelihood improvement. Impact of these demonstrations on out-scaling to other sites may be available in later years.

3.7 Water Resources at the Project Site (Village)

Presently, there is only one developed water source which is located 0.5 km from the village. The source is baseflow water from the upper catchments. Water from this source is diverted through pipes to 5 water

tanks which are constructed in various parts of the village. Water from these tanks is further distributed among the households by way of GI pipes. The initial work for this distribution of water was done by the NGO- *World Vision.* Further work on this front is being carried forward by ICAR, which has also diverted water to households by way of GI pipes. This small water supply scheme only partly meets the domestic water needs.

The average rainfall in Mon district during dry months is very low and the water source runs dry. During these months the villagers have to rely on the stream which flows further down the slope of the village. Collection of water during these dry periods is very difficult since on an average, the villagers have to travel 630 m, that too on an uneven terrain to fetch water. It is not uncommon to find women and children going to fetch water from nearby taps early in the morning. The amount of water collected by each household depends mainly on the number of female members in the family since it is the women who go out to fetch water. Households having cattle have higher consumption of water. Water is collected in either plastic buckets or more commonly in bamboo containers. The average amount of water collected by one adult female is 20 litres per trip. Small children also help in fetching water. On an average, every household collects water 2-3 times a day. Such meagre supplies can hardly meet the consumptive water needs of the family and there is hardly any water supplies for productive purposes or other enterprises. This leads to a very high level of water poverty which is discussed in the following sections.

Coping with water scarcity in Lampong Sheanghah, Mon, Nagaland

(Photo credit: Bharat Sharma)

3.8 Water Poverty Map of *Lampong Sheanghah*

The households of village of *Lampong Sheanghah* were ranked according to their WPI score. A low score on the WPI indicates high water poverty and vice versa. Any value of less than 0.5 indicates high level of water poverty. The final WPI composite index scores for each cluster/ colony inhabitants and the final scores for the whole of *Lampong Sheanghah* are shown in Table 4. The same results are shown in graphical form by way of a WPI pentagram for the various clusters/colonies of the village (Fig 6).

Since WPI is a relative measure of water poverty, it is not possible to determine the absolute state of water poverty in the case study area from the Water Poverty Index alone. However, it is possible to draw some valid conclusions on the relative nature of water poverty between the clusters/ colonies or among the various households. The following conclusions can be drawn from the WPI and the correlation coefficients (Table 5) for the WPI components:

Table 4: Water Poverty Index (WPI) Composite Index Scores for each cluster/ colony of the village Lempong Sheanghah, Mon, Nagaland

Cluster/ Colony	Resource	Access	Capacity	Use	Environment	WPI
Ching Lan (New side Colony)	0	0.310	0.393	0.113	0.968	0.349
Ching Kho (Upper Colony)	0.500	0.457	0.424	0.198	0.826	0.477
Ching Tan (Middle Colony)	0.833	0.479	0.414	0.172	0.909	0.546
Ching Chong (Lower Colony)	0.500	0.312	0.342	0.081	0.989	0.422
New Upper Colony	1.0	0.341	0.412	0.100	0.980	0.529
Lampong Sheanghah	0.383	0.406	0.402	0.147	0.916	0.444

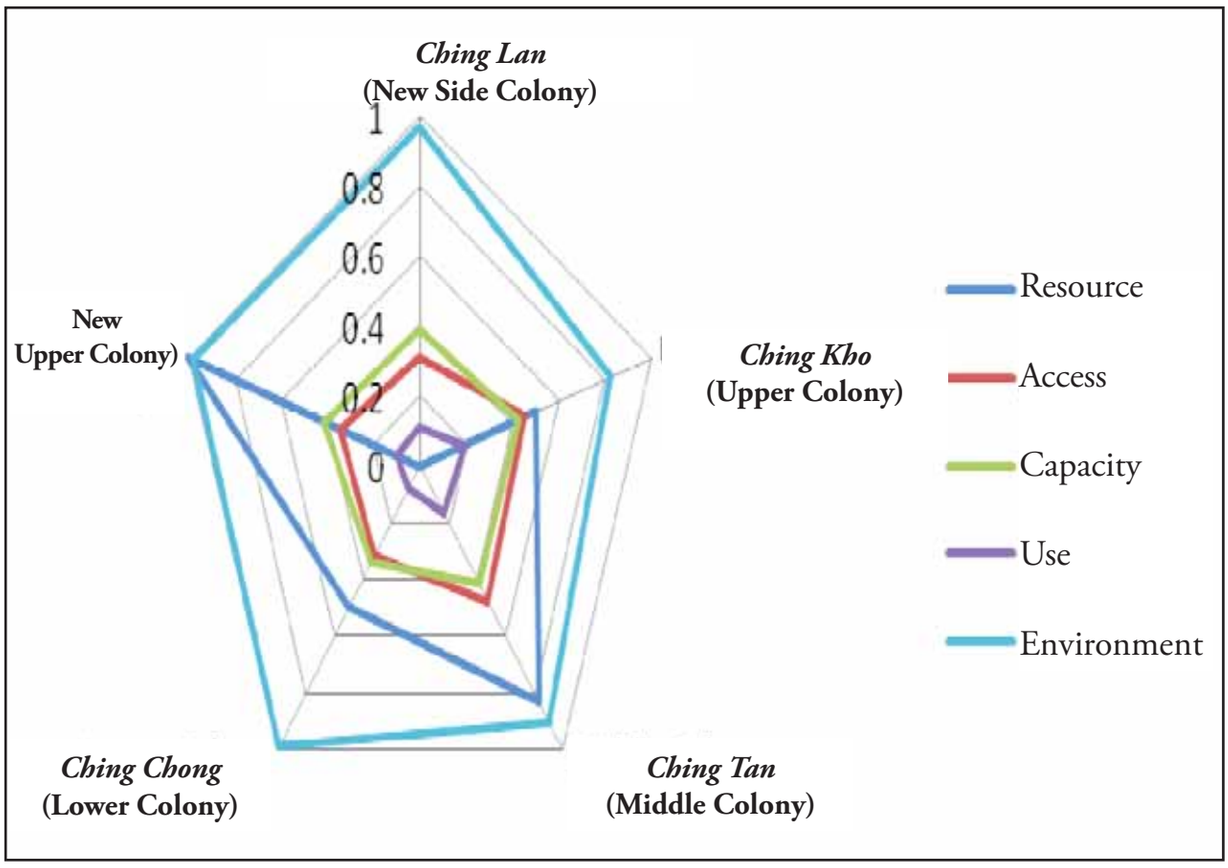

Figure 6: Water Poverty Index Pentagram for various clusters/ colonies in *Lampong Sheanghah* village, Nagaland

Table 5: Correlation coefficients for the Water Poverty Index (WPI) component scores

Component	Resource	Access	Capacity	Use	Environment	WPI
Resource	1.00					
Access	0.14	1.00				
Capacity	0.08	0.37	1.00			
Use	0.13	0.45	0.25	1.00		
Environment	0.08	0.13	0.04	0.48	1.00	
WPI	0.50	0.68	0.57	0.36	0.11	1.00

i. The inhabitants in the New Side cluster (*Ching Lan*) have the lowest relative WPI score (0.349) and it is therefore the most water poor cluster in the village. This also shows that the developed water resource is hardly sufficient to meet the domestic needs of existing population and any further expansion shall face very high water poverty.

ii. The Middle cluster/ colony (*Ching Tan*) has the highest relative WPI score (0.546) and is thus the least water poor cluster in the village. In absolute terms even this WPI score does not rank very high to suggest sufficiency of water resource.

iii. The two highest ranking colonies in the Water Poverty Index (Middle Colony- *Ching Tan* and New Upper Colony) are colonies with relatively high access to water resources and where high capacity water storage structures have been recently constructed.

iv. The "Access to Water Resource" component has the most significant impact on water poverty since the correlation coefficient of that component (0.68) is the maximum among all the components. ***This explicitly explains that it is not the resource per se, but the provision of access to water resource which is most important for alleviating water poverty. It is true even in so called 'water abundant' villages of Nagaland and north east region.***

v. The environment component seems to have very less effect on water poverty (Correlation coefficient 0.11).

vi. There appears to be a high correlation between 'Access' and 'Capacity' which indicates that the restriction on access may be due to the lack of education or income. Alternatively, it can also be argued that the limitation on capacity may be due to poor accessibility to water. The opportunity cost in collecting water for household consumption seems to be very high.

vii. There is an urgent need to augment the water resource in the village through construction of adequate water storage and distribution structures (especially in New Side cluster/colony, *Ching Lan*).

viii. Water from all the water storage structures should be provided with primary treatment so as to make it fit for human consumption. The supply for productive purposes (livestock, homestead gardens) may be addressed separately or through enhanced supplies.

ix. The distribution network to all the clusters needs significant improvement for enhancing the score related to the 'Access' component.

x. Since a major part of the 'Capacity' component is related to the per capita income, it is imperative on part of any developmental agency to improve the household income for the households which rank poor on that front. Since agriculture is the main occupation of a majority of the households in the village, all efforts should be directed towards improving the farm productivity in the village. This shall be possible mainly through improving access to an assured water supply source. To start with, homestead gardens should be supplied with small but assured supply of water resources.

The general conclusion that can be drawn from this study is that 'Access' and 'Capacity' are the two major factors contributing to water poverty in the village of *Lampong Sheanghah*. In the two most water poor clusters (*Ching Lan, Ching Chong*) and the entire village as a whole, improving the per capita income and the accessibility to water resource would lead to a much improved Water Poverty Index and thus improved livelihoods.

International Water Management Institute (IWMI) and the International Development Enterprises (IDE) have successfully implemented a project on 'Multiple -Use Water Services (MUS)' in the hilly areas of Nepal- an agro-ecological region of the north-western Himalayas. Findings of this project were discussed during the NAIP Project meetings and enthused by the relevance and interest of the participants from the northeast region, it was agreed to design and implement a cross-learning program for the stakeholders from the NEH region. Special capacity building program (March 3-6, 2009) implemented in collaboration with IWMI- Nepal, IDE-Nepal and Department of Irrigation of the Government of Nepal discussed both theoretical and practical aspects of the Multiple-Use Water Services for the hilly areas. In all 13 participants comprising of farmers, researchers and development officers from Nagaland and Sikkim states of the northeast hill region of India participated in the program organised at Kathmandu, Nepal. The next section of the report briefly describes the concept, design, experiences and suitable policies for implementation of the Multiple-Use Water Sevices in the hilly areas.

4. Multiple-Use Water Services for the Hilly Areas

Multiple Use Water Services (MUS) is a participatory, integrated, and povery reduction focussed approach which takes people's multiple water needs as starting point for providing integrated services. MUS is a strategy to move beyond sectoral barriers of the domestic and productive sectors and provide for all water needs in a community (Mikhail et al; 2008). In the middle hills of Himalayas, *bari* is the most prevalent land type close to the homesteads and can be easily used for crops like vegetables that require protection. Despite a lack of access to canal or well irrigation, it has great potential for increased crop production with micro/ precision irrigation as the technology requires small amounts of water and can be applied on sloping lands without any danger of soil erosion. Therefore the productive portion of multiple-use water sevices can take the form of micro-irrigation of vegetables on *bari* land close to the homestead. Further, as rivers and streams are difficult and expensive to access, spring water (base flow component) has become the preferred source of domestic water for most villages (including Lampong Sheanghah and Longwa- the study villages in Nagaland

and other parts of NEH region). Domestic uses include drinking, cooking, bathing, cleaning and sanitation and meeting livestock water needs and for any additional enterprise water needs. This forms the consumptive component of the multiple-use water services and the families (especially women) attach higher importance to this component as it greatly reduces the drudgery and improves water availability at the household level.

Most irrigation water in the middle hills comes from small rainfed streams and rivulets which have very high discharge during rainy season and may have little or no water during pre-monsoon dry season. However, many households, and often entire village communities, have no access to irrigation and are primarily dependent on rainfall for their crops. The rainfall analysis for the NEH states in India shows that rain occurs mainly only during two quarters (March- May and June-August) with the third quarter (September-November) receiving scanty rainfall and fourth quarter (December- February) receiving little or no rainfall (Table 6). As such no crop cultivation is possible during this non-rainy period without an assured water resource. Additionally, domestic supplies shall also be severly constrained during this period. All households in the villages generally have livestock including pigs, cattle and poultry mostly for meat purposes. Livestock watering is considerd part of the domestic water allocation and when domestic supplies are reduced, livestock water needs will be hardly met. People adopt different coping strategies to tide over the scarcity situations.

Multiple-Use Water Services is one such innovative technology and practice with potential to meet both productive and consumptive water needs of the the farmers in the hilly areas (van Koppen et al., 2009). This has been successfully demonstrated and adopted in the adjoining hills in Nepal and appears a very successful model for the northeastern hill states.

Table 6. Percent distribution of rainfall in different states of north-eastern region, India

Period (quarter)	Asom (Guwahati)	Arunachal Pradesh (Basar)	Manipur (Imphal)	Meghalaya (Barapani)	Mizoram (Kolasib)	Nagaland (Jharnapani)	Tripura (Lembucherra)	Sikkim (Gangtok)
December-February	**2.7**	**7.6**	**19.6**	**0.6**	**2.3**	**5.8**	**3.8**	**6.0**
March-May	22.0	28.4	30.6	30.0	20.9	26.2	37.7	22.0
June-August	54.9	44.9	43.4	29.0	58.7	53.2	43.0	40.0
September-November	20.3	19.1	7.0	40.4	18.7	14.8	15.5	32.0
Total rainfall (mm)	2,416	2,125	2,170	2,459	1,139	1,294	1,588	3,067

4.1. Development of Multiple-Use Water Schemes in Nepal Hills

In order to address the household water need for production and domestic use, International Development Enterprises (IDE), with some modifications to the conventional piped water systems for the hilly villages, designed a new scheme. The scheme includes one storage tank (Thai Jar) of about 3,000 liters for drinking water and the overflow from this tank is collected in an underground tank of about 10,000 liters for irrigation through off-takes at farmer's field. The design was tested in 2001 in Palpa (Nepal) and was introduced to other IDE implemented projects as well, which was known as 'hybrid' system which now is known as multiple-use water schemes (MUS) in the hills of Nepal. One of the primary objectives of the introduction of new technology was to increase household income through sale of the surplus agricultural produce in the market. The project laid emphasis on encouraging households in the community to produce cash crop, mainly the vegetables. Since vegetables are perishable items, the market linkage along with collection centres was important in development of this technology. The goal of the MUS Project is to explore ways to improve poor people's livelihood, reduce unpaid workloads, alleviate poverty and enhance gender equity through more productive use of small-scale water supplies in hill districts of Nepal (Adhikary 2009). The works carried out under the project show that these small-scale schemes have several advantages (Pant et al 2006):

i. Cost effective in supplying water to remote areas.

ii. Flexibility in its adoption in different locations.

iii. Water supply both for household use and for micro-irrigation of high value crops.

iv. Adopted technologies are suitable for the difficult terrain of hilly regions.

v. Low construction and maintenance costs and relatively short construction period (less than 3 months on an average)

vi. Low pay back period (less than 2 years) with low per household investments.

vii. Reduced drudgery for women and children for water collection.

viii. Improved sanitation and hygiene practices.

ix. Reduced need for expensive storage tanks.

x. Significant financial incentives for farmers to install and maintain due to income from high value cash crops.

xi. High level of community participation in scheme constructioon and operation and maintenance.

In addition, there are significant benefits from household water supplies, which reduce drudgery and unproductive use of household labor, particularly of women and children, and improved public health. The project has also developed guidelines illustrating the process for MUS implementation based on a 5-year experience (Mikhail and Yoder, 2009).

4.1.2. Growth of Multiple-Use Water Schemes(MUS)

A look at the expansion rate of the MUS (Figure 7) shows encouraging trend. Within a period of 5 years (2003-2008), the number of MUS projects has increased to 122 which shows its popularity in the hilly areas. The growing demand of MUS is also indicative of suitability of its adoption in different locations, which are not identical to each other in terms of geographical condition, socio-economic composition, market linkages and outside support. The rapid growth of MUS was possible also due to the partnership developed between government agencies, local elected institutions (Village Development Council), and private parties. However, the combination of partnership developed in each of the sites varies according to their effectiveness in various places.

4.2. Design of Multiple-Use Water Schemes

In principle, MUS are designed to cover 10 to 40 households but in some cases up to 80 households have been provided service from MUS. This largely depends on the number of households to be served and the availability of water. Design of the MUS accords first priority for the supply of water for domestic use. This is in conformity with the government water policy on water resource development which also assigns first priority to the drinking water followed by agricultural use (Water Resources Strategy of Nepal 2002; National Water Policy of India, 2007). The design criteria of MUS assumes 45 liter/person/day for domestic use and 400-600 liter/household for productive use (Sharma and Colavito, 2009). There can be a number of MUS designs depending on the type of water source, community water needs, water quality and desirable/ available technologies. Examples include:

i. Spring water distributed by gravity system

ii. Stream/ river water supply after treatment

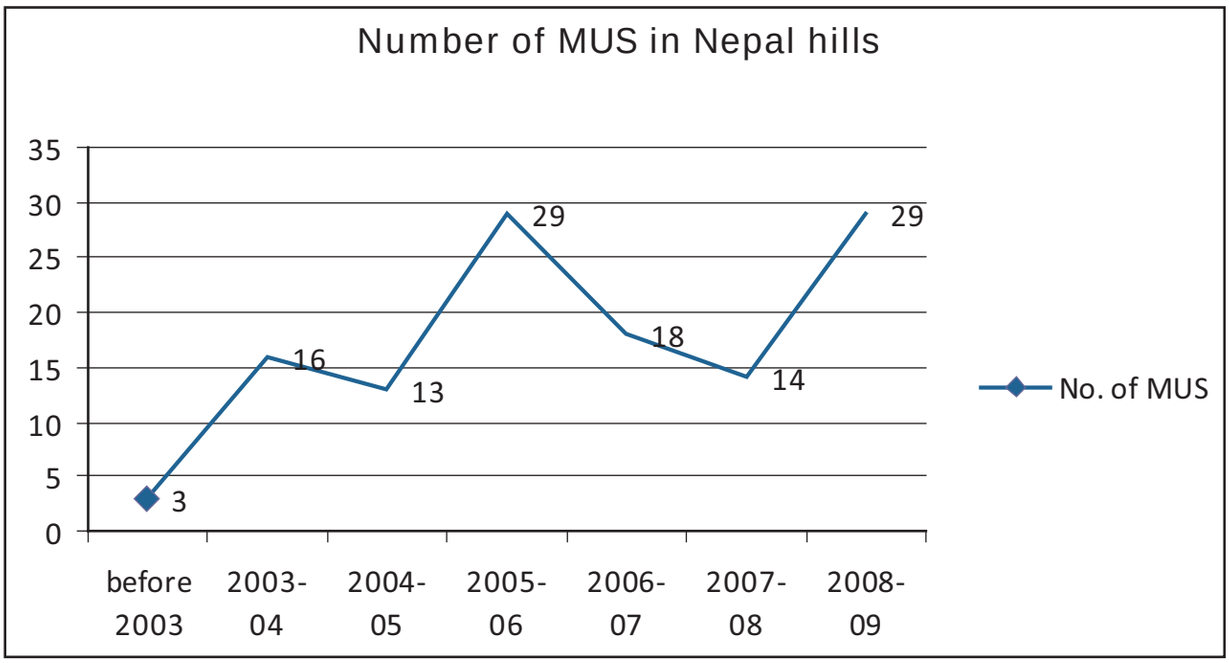

Figure 7: Trends of MUS growth in Nepal hill districts

(Source: Kailash Sharma, IDE/Nepal)

iii. Ground water/ lake water lifting and distribution

iv. Rain water collection and distribution

Based on the experiences in Nepal hills, it was found that gravity-fed piped MUS systems were highly useful and effective in meeting the community water requirements. MUS systems can have varying designs, depending on the productive use needs of the community. However, most of the systems tap spring sources and use gravity to pipe the water to a domestic water tank which overflows into an irrigation tank, using two separate distribution lines for domestic and productive water provision. This design puts the first priority for meeting the domestic and livestock water needs. When water is scarce, adding on-farm storage is an option. There are two major designs: Single Tank Distribution System and Double Tank Distribution System. Therefore, whether to design a single storage tank or the two storage tank is decided by the technicians in consultation with the users in the community, who know if the water availability is perennial or seasonal. In case of perennial source of irrigation, the users prefer single tank storage, as it reduces the costs but in locations where there are seasonal variations in water availability, two tanks storage with two separate pipe lines for the domestic and productive use are preferred by the users. In most of the cases the farmers prefer two tank storages in order to:

i. Have assured supply of water for household use.

ii. Avoid the conflicting interest for domestic and productive water use during lean season.

iii. Avoid conflict among users as a result of reduced availability of water.

Selection of the suitable design mainly depends on the discharge of the water source and the length of the pipe network required. Features of both the systems are given below:

Single Tank Distribution System	**Two Tank Distribution System**
One storage reservoir connected to a tank at each household	Two reservoirs in each village
Single pipeline distribution	Domestic use has priority over irrigation because domestic water overflows into the productive water tank
Water used for multiple needs from household tanks	Double pipe line for distribution
Household water tank filled on a turn-by-turn basis	Shared tapstand and offtakes for domestic and productive uses
Good for abundant water source scenario	Suitable for moderately good water source scenario

It has been observed during the field visit that farmers scheduled the water distribution for domestic and productive use by rationing water supply for 2-3 hours for domestic use when availability is low. The saved water thus was used for productive use.

Further depending upon the amount of water available at the source (scarce, moderate, abundant), three types of MUS can be constructed:

i. *Type A: Continuous Flow System* : This type of MUS is built when the safe water discharge at the water source is more than 1.5 times the projected water demand. Water is supplied throughout the

day from the tap stands without regulating the flow in the main tank. However, this type of system is recommended only when the number of households is less than 40 and/ or the pipe network is more than 4 km long.

ii. *Type B: Seasonally Controlled System*: This design is most suitable when discharge of the water source is not adequate to meet the design demand throughout the year. The design has two separate water tanks- one for domestic use and the other for productive use. Water from the source is first supplied to the domestic water tank and once this is filled, the surplus water will be directed to the productive water tank in the vicinity. Tap stands are located in between the house clusters to serve domestic demand. On the other hand off-takes are constructed approximately at the centre of the irrigation field of few land owners (average 3-6 households). Water distribution is controlled from the outlets of two main tanks, depending on the water availability during different seasons of the year. Although, this design is relatively costly due to two tanks and the distribution systems, the design removes the potential conflict between domestic and productive uses by prioritising domestic use. This is the most common design built in the Nepal hills and shall be equally suitable for the villages in the Northeast hill states of India.

iii. *Type C: Year-round Controlled System:* In case the water source is just enough to meet the design demand, Type C shall be a good choice. This system is similar to continuous flow system in terms of the single main tank and pipe network, however in addition, each household has a small storage tank at its premises. Based on a community developed schedule, household tanks are filled on a turn-by-turn basis.

4.3. Planning and Implementation Process

The entire MUS process is carried out in the following four phases:

i. *Phase I: Pre-Construction Planning:* This process includes all the activities from initiation to approval of the scheme. The main activities are the feasibility study, survey, design, system costing and formation of a Water User Association (WUA). By the end of this phase a formal agreement is made among the stakeholders. The most critical activities include community participation in the plan development, readiness for the adoption of micro-irrigation technologies and establishment of a water tariff. The community needs to be sufficiently mobilised to take a pro-active role.

ii. *Phase II: Construction Phase:* This phase begins with the collection and procurement of construction materials. Lines and levels are provided with for the pipelines and structures. The conveyance pipeline is first constructed followed by tank construction and the distribution pipelines. Finally, the tap stands and off-takes are built. After completion of all construction, testing is carried out. If the test results are found to be satisfactory, backfilling is done for the pipeline and structures.

iii. *Phase-III : Post-Construction Phase:* After successful construction and testing of the scheme, a meeting of the Water Users Association is convened for review of the progress and nomination of the Scheme Operator and Caretaker. Operator is provided with practical training on system operation and maangement. Similarly, caretaker takes care of the inventory and proper upkeep of

the system components. A project completion report is prepared at the end of the construction phase. During an inaugural function the detailed report of the scheme implementation process is presented.

iv. *Phase-IV: Performance Evaluation:* Periodic evaluation on the performance of the system are done within a few years of scheme completion. Evaluation is carried out both internally and externally. The WUA may conduct the internal evaluation while an outside funding/ donor agency may conduct the external evaluation. It is recommended that WUA may be provided with some seed money to take care of any initial bottleneck and then it may become self-supporting and financially independent.

4.4. The System Components

As discussed earlier, the main components of the system include: (i) water storage system (water tanks), (ii) water conveyance and distribution system (pipes and stand posts), and (iii) water application system (low cost drip or micro-sprinkler system). In this section, we explain the special design characteristics of the storage and application systems.

4.4.1. Low Cost Water Tank Technology: The Modified Thai Jar and Ferro Cement Lining Designs

Collection and storage of water while it is available and its use for dry season irrigation can give poor smallholders a good opportunity to generate a cash income through the production and sales of high value cash crops and livestock products. The traditional water ponds have high losses due to seepage and evaporation besides contamination with dust and open access to animals. Modern plastic tanks and cement tanks are generally expensive and have small service life due to cracks, leakages etc. Based on a considerable research and field experience, the following three models (Table 7) were found quite suitable for adoption in the hilly areas.

Out of these storage structures, Modified Thai Jars for domestic water supplies unit and ferro-cement lined tanks for irrigation water supplies are very common. Modified Thai jars (Figure 8) have several advantages, including;

(i) Can be constructed in various capacities (1,000 l; 1,500 l; 3,000 l).

(ii) These are cheaper than commercial plastic and masonary tanks.

(iii) Locally trained masons can construct these in in 3-5 days.

(iv) Jars can be built above ground at a common site or partially buried at the site.

(v) Jars can be used to store water from any source for multiple applications and suitable for storage of drinking water.

Ferro-cement tanks are generally of larger capacity and are generally buried up to the surface with a small boundary embankment. These tanks are generally covered with sheets for protection from animals and misuse. These designs are also cheaper than commercial plastic and masonary tanks, simple to construct in 7-10 days with assistance of locally trained mason, robust and easy to maintain and capable of withstanding minor land settlements and tremors. The material requirements for construction of various sizes of the tanks and the approximate cost are given at *Annexure-II*.

Figure 8: Modified Thai Jars and Ferrocement lined tanks for water storage under the MUS projects.

Table 7: Basic information on low cost water storage tanks in the hilly areas

Tank type	Storage volume	Shape	Approx. Cost (US $), 2009 price
Cement Mortar Jar	Type A: 500 liter Type B: 1,000 litre	Jar	US$ 25 US$40
Modified Thai Jar	Type A: 1,500 liter Type B: 3,000 litre	Jar with narrow neck	US$56 US$75
Ferrocement Lined tank	Type A: 6,000 liter Type B: 10,000 litre	Rectangular	US$95 US$175

4.4.2. Low-cost Drip Irrigation Systems

The conventional drip systems are suitable for most vegetable, horticultural and other high value crops but generally are cost and technology intensive and do not find favor with small-holder farmers who have tiny plot sizes located in remote areas. Financially affordable simple and low cost drip irrigation kits appropriate for small land holdings are now available. The main features of these low-cost drip irrigation kits include:

i. Low-cost: About 3-5 times cheaper than conventional drip system.

ii. Simple: Components are easy to understand, assemble and operate.

iii. Divisible: Available for vey small plot sizes.

iv. Low pay-back period: Normally the cost may be recovered in a single growing season.

The simple drip system has three main components: (i) control head, (ii) pipe network, and (iii) fittings and emitters (Fig. 9). Operating head is provided by water pressure through the water stored in small tank put at 1.0–1.5 m height. Main technical features of the simple drip system are given in Table 8.

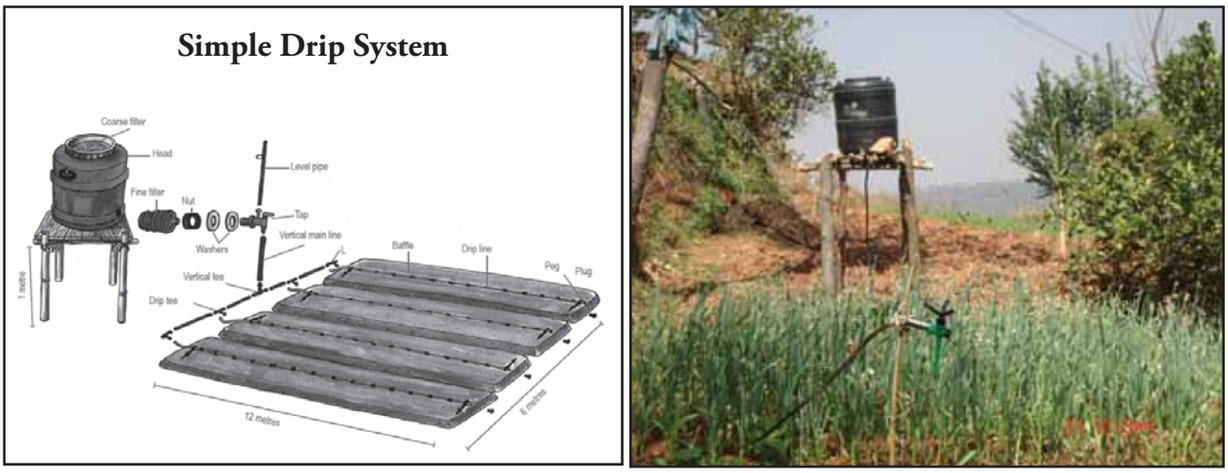

Figure 9: Low-cost drip irrigation system as part of the MUS

Table 8: Main technical features of a simple low-cost drip irrigation kit

Parameter	Specification
Operating head (Water pressure)	1.0 m to 1.5 m height
Standard sizes (Irrigation coverage)	Five sizes: 90 m^2, 125 m^2, 250 m^2, 500 m^2 ; 1,000 m^2
Emitter discharge	2.1 to 2.4 litres/ second, depending on size of the system
Distribution uniformity	Above 80%
Materials used	Head tank : 50 to 100 litre HDPE circular tank Pipes: Soft PVC with pure granules Fittings: HDPE pure and recycled material
Maximum length of laterals	12 m
Diameter of pipe	Main pipe: 12 mm outside diameter Lateral: 8 mm outside diameter

The main components of the system include: head tank, outlet set, mainline set, drip-pipe set and the filters. Step-wise simple installation of the system may include the following:

i. Select land and prepare crop bed: Normally the selected plot may have a size of 12m x7m divided into four strips of 12m x1.5m, preferably on a flat leveled land. But the system shall work on a sloping land as well. Prepare the soil well for planting the seedlings.

ii. Erect a head structure: This is required for placing the small water storage tank. This can be a simple table-like structure made with locally- available wood or bamboo. The head structure must be between 0.75 m to 1.0 m above the ground and robust to take the load.

iii. Fix the outlet and filters: Fix the water outlet through the hole in the tank and put the filtering joints securely and properly.

iv. Join mainline pipe with the outlet: Set the tank on the platform and attach vertical mainline onto the outlet tap. Lay the horizontal mainline on one edge of the plot such that the "Ts" and "Ls" are close to the middle of each bed.

v. Connect lateral pipes (drip pipes) with the mainline: Unroll the drip lines and connect open end of all 4 lateral drip lines with the previously attached "Ts" and "Ls". Use the pegs to fix both ends of each lateral dripline, keeping the pipe straight.

vi. Pour the water into the head tank and mark the planting spots: With a closed gate valve, fill in the tank with water. Check for any leakages and open the gate valve and ensure all the drippers are functioning. Let the system run for five minutes and mark the wet spots for transplanting the seedlings.

For proper and trouble free operation ensure that drip pipes are correctly laid and baffles are close to the points, there is no debris or dirt in the filters, and fittings are tight to prevent any leakages. With the gate valve closed, fill the tank with water near the top. Open the gate valve to irrigate.

It is recommended to put up a fence around the crop field to prevent damage and theft and keep away the stray animals. Irrigation requirements shall vary with the season and crop. It is recommended to irrigate daily in the first month of the growing season and may be extended to up to 3 days at later stages.

Small systems create large benefits in the hills

(Photo Credit: Department of Irrigation, Kathmandu)

For closely spaced crops low cost mini-/ micro-sprinklers are available in a pre-assembled form with mainline sub-set and a riser sub-set.

4.5. Cost and Income of Multiple-Use Water Systems

Due to different designs and village/cluster sizes, distance from the source, and other factors, the cost of the system may vary considerably. However, when looking at the whole range of the projects, the average cost of the system is around US$ 100 per household considering both cash and non-cash payments. Further by factoring in all the hardware and software costs (agriculture intervention and support staff costs), the total cost in the hilly areas may vary from US$ 196 to US$ 226 per household (Mikhail and Yoder, 2009).

Most of the farmers adopting multiple-use water systems focus on cultivation of vegetables and high- value crops. They use rain-fed land that has very marginal crop yields for cereal crops without irrigation and utilise very small plots of land and were not marketing any surplus produce. The surveys conducted in Nepal hills showed that MUS households on an average earned additional annual income of US$ 190, which means that pay back period for the system was only 1 year and is very attractive. Households also consume about 10-15% of the increased production for home consumption improving health and nutrition.

Assured water with good agronomy and markets works wonders even under most challenging situations

Photo credit: ICAR Complex for NEH, Sikkim Centre

The full returns of MUS require a complementary development program. Smallholder farmers are the most efficient high-value crop producers when they have access to appropriate technology and inputs, knowledge, and market channels. This can be achieved through well located and functional collection centres run by enterprenures and cooperatives. MUS are a critical part of any high-value agriculture strategy. The system enables the density of adoption of micro-irrigation and high-value crop production that creates volumes needed to establish local collection centers and sufficient market for the establishment of local input and service providers.

4.6. Women Empowerment

Women are the prime focus groups of all the multiple water-use related project activities. Upon adoption of the MUS, the roles of women change and their decision making both inside and outside the households improves significantly. Their involvement in key positions of MUS user committees empowers women to lead committees and link with other agencies. The additional income they earn from sale of vegetables and other produce provides financial independence and enhances financial decision making. MUS also reduces women's workload by decreasing the time needed to collect water (free labor), a task typically assigned to women and children. Household

Meeting the important domestic water needs is an integral component of the MUS.
Removal of drudgery makes the women happy and confident.

Photo credit: IDE, Nepal

vegetable consumption is increased and provides better nutrition for women and children, saving medical expenses.

4.7. Lessons Learnt

Multiple-use water systems shall be better designed and implemented when both supply side institutions (research and development organisations, state agencies, village development committeess) and demand side institutions (farmers committee, MUS users' group, NGO and local chief) understand and perform their role in a harmonious manner. The expected roles of supply side and demand side institutions are given below:

Roles of the institutions	
Supply side	**Demand side**
• Situation analysis, constraint and opportunity identification • Objective and target setting • Program/ project identification • Resource use planning and funding • Implementation, interaction • Monitoring and evaluation • Policy advocacy and formulation	• Community mobilisation • Generation of community resources • Securing local support • Estabilishing backward (input supplies) and forward (output marketing) linkages • Ownership takeover and sustaining the system

Implementation of a large number of MUS programs provide the following important lessons for its successful adoption in the NEH region:

i. **The MUS technologies**

The most innovative part of the technology was to facilitate productive utilization of locally available small water sources in the hills- the springs and rivulets. The communities were positive as they could access to water for multiple needs from a single system. The conventional systems generally do not have such a provision. Beside, the construction of conventional system is expensive, time consuming and requires higher skills and capital investment. Construction of MUS system in a short period of time at an affordable cost was positively taken by the farmers. Major factor in the introduction of technology was to convince the users' and concerned stakholders' to make collaborative investment and not just the government subsidy. Further, the establishment of marketing linkages for sale of surplus produce was an important factor for the initial success and sustainability of MUS.

ii. **Time saving and reduced drudgery**

One of the significant benefit reported from these studies are the time saving and reduction in drudgery for women and children who travel long distances to provide water for the household. The time saving was significant as it used to be between 22- 30 minute per trip across the locations. The involvement of women in vegetable production and marketing has increased their confidence

level to put their ideas and problems to others. Also, it was reported that there has been increased consultation between men and women in carrying out farm activities in the recent years as compared to past traditions.

iii. **Increase in household income**

MUS technology encouraged the farmers for productive activities enabling them to earn cash income which was an added incentive to the household (especially women). Households who had used MUS for more than one year have reported income from vegetables, which were important for food sufficiency and security, increased nutrient intake and thus improved family health and living standard besides fulfilling household's cash need especially for paying children's school fee and other necessities. It was reported that production of vegetable seeds fetched higher prices compared to fresh vegetables. This was important for places where the market linkages are weak. The availability of fresh green vegetable through out the year has also contributed for household nutrition. It was reported that 10 to 15 % of the produce is consumed at the household.

iv. **Improved hygiene and sanitation**

The studies have shown that the available water was of acceptable quality for drinking, as most of the schemes used to tap spring water. With the availability of the water, most of the participating households constructed toilets thereby encouraging them for better and improved sanitation and hygiene at the household. However, this was not part of the MUS program. Therefore, the studies pointed towards including it under MUS development program.

v. **Community participation**

The project emphasized on community participation both in terms of their direct participation – contributing in kind and cash - and indirect participation has strengthened the community organization. However, adoption was greater with the presence of an NGO or progressive farmers who lead the process of initiation, transfer and spread of these innovations. The homogeneity of the community with similar socio-economic characteristics had positive effect in adoption of technology. Some of these community organizations have expanded their activities e.g establishment of the collection centres for the benefit of the users. This has enabled the users to fetch higher prices for their vegetables and has also strengthened community bond. These orgnisations have also been important for the operation and maintenance of the project.

Some of the limitations or the constraining factors for the expansion of benefit from the MUS highlighted by these studies are:

i. Availability of water source

Location of a suitable and reliable source of water which may adequately meet the water demands of the village community was the most constraining factor limiting the expansion of MUS technology to cover greater number of household and the villages. The availability of the resource is the most critical starting point for implementation of the Project.

ii. Non inclusion of certain households

Some of the households for various reasons could not be included in the MUS program. The reasons were landlessness and single headed households beside some of the households who were not initially convinced of the benefits of the project.

iii. Technological problems

Some of the farmers reported problem relating to the drip kit itself such as clogging of holes, breakage of pipe-fitting and low tank capacity etc. Also, farmers who wanted to expand the area felt that the tank had inadequate capacity. But from the equity perspective, allowing expansion of area by some of the farmers would have affected other users. However, these issues can be resolved with proper capacity building and quality control of the material.

5. Conclusion

In the water abundant northeastern region of India, the societal water use is less than 5 per cent of the existing potential and vast water resources of the region remain unutilised for economic activities. The unutilised and excessive water supplies create vast devastation and miseries during the rainy season and the households face acute water shortages for both consumptive (domestic, livestock, enterprise) and productive purposes during post-rainy season periods. Though majority of the population is still dependent on agriculture, the region generally practices very low yielding rainfed monocropping or the more destructive shifting (*Jhum*) cultivation. The ratio of percent irrigated area to net sown area for the NE region as a whole is abysmally low at 10.6%. This leads to poor crop yields, low cropping intensity and little incentive for diversified or high value agriculture. Among other things, assured water supply, though for a limited area (homestead gardens*, bari)* is a pre-requisite for moving up the value chain and sustainable livelihoods.

Water poverty mapping based on household surveys in a typical village in Mon district (Nagaland) showed that all the households fared very poorly in terms of the most components of Water Poverty Index (WPI): Water Use (0.15), Water Resource (0.38), Water Access (0.40) and Capacity (0.40) with an overall value of 0.44. 'Access' and 'Capacity' are the two major factors contributing to water poverty in the study village and applicable to similar other villages in Nagaland and the NEH region. This was also reflected through low levels of income and high prevalence (44% of households) of malaria, tuberculosis and other water-borne diseases. The villages still practice traditional *Jhum* cultivation with very low yields of rice and millets and ever-shortening period of *Jhum*-cycle. Alternative to this practice has been amply demonstrated through excellent demonstrations of improved crops,varieties and practices at the ICAR Livelihood Improvement Project site. But the community immediately needs simple, small, low-cost and relatively high-value agriculture models which can provide for the basic water needs and also improve their incomes.Improving the accessibility to water resources and per capita income would significantly reduce the water poverty and thus improve the livelihoods.

Multiple-Use Water Systems developed and implemented successfully in the similar agro-ecological hill regions of Nepal are cost-effective, flexible, provide water supply both for household needs and micro-irrigation for small high-value agriculture plots (homestead gardens), has low pay-back period with low household investments. More importantly, these systems reduce drudgery for women, improve sanitation and hygiene, provide significant financial incentives and ensure high-levels of community participation. The most innovative part of the technology was to facilitate productive utilisation of locally available small water soucres in the hills- the springs and rivulets through a water storage system (low-cost water tanks), water conveyance and optimally placed distribution system and a simple and small water application system. Each system is normally designed to meet water needs of 10 to 40 households with an all inclusive cost of about US$ 200 per household . With additional annual income of about US$ 190 through sale of surplus produce the system has a pay back period of only 1 year and is very attractive. The market linkage along with collection centers for the surplus produce was important in the development of the technology. The only constraining factors were the availability of an adequate and reliable water source in the village neighbourhood and certain technological problems in the initial period which can be resolved through proper capacity building of the farmers and scheme functionaries.

The suggested Multiple-Use Water Systems is quite appropriate to the high rainfall hilly states of the northeast hill region. The present and new drinking water supply schemes in these regions need to be designed more innovatively on the suggested pattern by integration of public health, irrigation and agriculture development schemes . The success of the schemes shall greatly depend upon the motivation and participation of the village communities for which the local NGOs, government functionaries, village chiefs and village level institutions shall play an important role. The suggested model has a great potential in reducing the water poverty, saving time and reducing drudgery, increase household income, improve hygiene and sanitation, empower women, ensure community participation and thus improve the livelihoods of poor households in the north-eastern and other hill region states of India and elsewhere through improved use of the water and land resources of the region.

6. References

Adhikary, D.L. 2009. Background of the micro-irrigation and MUS development in Nepal. Special Training Program on " Multiple Water Use Systems for the Hilly Areas", (3-5 March, 2009), International Water Management Institute, Kathmandu, Nepal.

Agarwal, A.; Narain, S. 1997. Dying Wisdom- Rise, fall and potential of India's traditional water harvesting systems. Centre for Science and Environment, New Delhi. pp. 54-70.

Cullis, J., Gorgens, A. 2006. Water poverty mapping as a tool for the effective allocation of resource to address water poverty in South Africa. Paper presented at WISA Biennial Conference and Exhibition, Durban, South Africa, 2006.

Goswami, D.C. 1992. Zonal planning in water. *In.* Planning perspectives for the north-eastern and eastern zone, Adiseshiah, M.S. (ed), Lancer Publishers Pvt. Ltd., New Delhi, pp. 9-22.

Goswami, D.C. 2002. Flood forecasting in the Brahmaputra River, India: A case study. *In.* Regional Cooperation for Flood Disaster Mitigation in the Hindukush Himalayas, Chalise, S.R and Shreshtha, M. (Eds.), ICIMOD. Internal Report, 2002. pp. 40-48.

Goswami, D.C.; Das, P.J. 2003. The Brahmaputra River, India: the eco-hydrological context of water use in one of world's most unique river systems, *Ecologist Asia* (Special issue on Large dams in north-east India: rivers, forests, people and power), 11(1): 9-14.

Sharma, K.; Colavito, L. 2009. Experience of Multiple Use Water Services (MUS) Implementation in Nepal. Paper presented at IWMI-NAIP Training Programme on Multiple Water Use Systems (MUS) in the Hilly Areas. Kathmandu, Nepal (March 3-5, 2009).

Lawrence, P.; Meigh, J., Sullivan, C. 2002. The water poverty index: An international comparison. Keele Economics Research Paper 19. Keele, Staffordshire, UK: Department of Economics, Keele University.

Mikhail, M.; Yoder, R. 2009. Multiple-Use water Service Implementation in Nepal and India: Experiences and Lessons for Scale-Up. International Development Enterprises/ Challenge Program on Water and Food/ International Water Management Institute, Colombo, Sri Lanka. Pp. 345.

Mishra, A. K.., Satapathy, K.K. 2003. Food security vis-à-vis natural resources sustainability in northeastern region of India. ENVIS Bulletin: *Himalayan Ecology, 11* (1), G B Pant Institute of Himalayan Environment and Development, Kosi-Katarmal, Almora, India. (available at: http://gbpihed.nic.in/envis/HTML/vol11_1/akmishra.htm)

Pandey, N.D. 2009. Policy environment of Non-conventional Irrigation Technology in Nepal. Paper presented at IWMI-NAIP Training Programme on Multiple Water Use Systems (MUS) in the Hilly Areas, Kathmandu, Nepal (March 3-5, 2009).

Pant, D.; Gautam, K.R. ; Shakya, S.D., Adhikary, D.L. 2006. Multiple Use Schemes: Benefit to the Smallholder. Working Paper 114, International Water Management Institute, Colombo, Sri Lanka

Samuel, M.P.; Satpathy, K.K. 2008. Concerted rainwater harvesting technologies suitable for hilly agro-ecosystem of Northeast India, *Current Science,* 95(9): 1130-1132.

Sharma, U.C.1996. Yield sustainability and strategies in northeastern states. *Productivity,* 36:682-690.

Sullivan, C.A. 2005. Method to develop and describe community level water poverty index scores. CEH Wallingford, UK: Oxford University Centre for Water Research.

v Koppen, B., Smit, S., Moriarty, P., Penning de Vries, F., Mikhail, M., Boelee, E. 2009. Climbing the Water Ladder: Multiple- use Water Services for Poverty Reduction. The Hague, The Netherlands, IRC International Water and Sanitation Centre and International Water Management Institute. (TP Series No. 52). 213 p.

Annexure-I

Methodology for Constructing Water Poverty Map and Water Poverty Index

For the construction of the Water Poverty Map, a Water Poverty Index has been constructed which takes into consideration multiple indicators for estimating water poverty.

Mathematical structure of the WPI

The WPI is calculated using a composite index approach similar to the one used for Human Development Index (HDI). Various elements measured in different units are aggregated together, and the five key components are combined using the general expression:

$$WPI = \frac{\sum_{i=1}^{N} wiXi}{\sum_{i=1}^{N} wi}$$

Where, WPI= Water Poverty Index value for a particular location, *Xi* = component (Resource, Access, Use, Capacity or Environment) and, w = weight

The application of the framework provided by the WPI enables a more consistent approach to decision making, and decisions can be both audited and defended. Depending on the purpose of its use, the WPI can be applied at a range of different scales. To determine the degree of need for water provision, it can be applied at the community level, and at the intermediate and national scales (Sullivan 2005). Here, for the purpose of the current study, the WPI is applied at the household level.

Consistent representation of components at each scale facilitates meaningful comparisons, and variables can be determined by stakeholders according to local needs, WPI structure for that location, and *wi* is the weight applied to that component. Each component is made up of a number of sub-components, and these are first combined using the same technique in order to obtain the components. For the components listed above, the equation can be re-written:

$$WPI = w_r R + w_a A + w_c C + w_u U + w_e E$$

where w_r, w_a, w_c, w_u *and* w_e are the relative weighing factors for each key components.

Calculating the WPI in this way provides the weighted average of the five components Resources (R), Access (A), Capacity (C), Use (U), and Environment (E). Each of the components is first standardised so that it falls in the range 0 to 1; thus the resulting WPI value is also between 0 and 1. A low score on the WPI indicates a more extreme case of water poverty. The weight given to the elements w_i, represents the relative importance given to each of the them.

Calculating indices

Scores for each index and sub-index are calculated by the formula:

$$\frac{xi - x\min}{x\max - x\min};$$

where x_i, x_{max} and x_{min} are the original values for household *i*, for the highest value household, and for the lowest value household, respectively. The index for any one indicator lies between 0 and 100. The aim is to get index values in the range 0 to 100 for each quantity being considered, where 0 is worst, and 100 is the best. When these are combined to make a composite index, then each component is on the same basis (Sullivan 2005).

Annexure-II

Low-Cost Water Storage Structures

1. MODIFIED THAI JAR

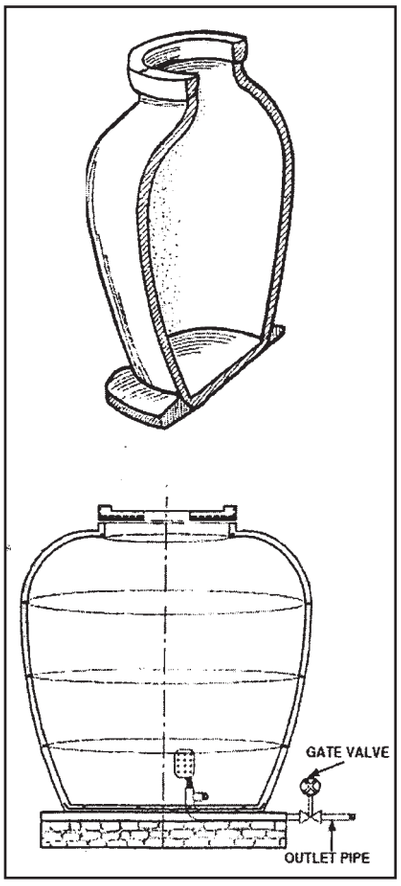

Tank Components and Cost Estimates

Component	Unit	Rate (NRs)	1000 liter MTJ		1500 liter MTJ		3000 liter MTJ	
			Qty	Total	Qty	Total	Qty	Total
DIRECT CASH COMPONENT								
Cement	Bag	500	2	1000	4	2000	6	3000
White cement	Kg	20	2	40	3	60	4	80
7 mm steel rod	Kg	54	2	108	3	162	5	270
8# Gabion wire	Kg	61	1.5	91.5	2	122	4	244
Chicken wiremesh	m^2	45	1	45	2	90	4	180
Binding wire	Kg	55	1.5	82.5	2.5	138	4	220
Pipe fittings	Set	700	1	700	1	700	1	700
Filter	No.	150	1	150	1	150	1	150
Plastic sheet	m^2	320	0.35	112	0.55	176	1	320
Mason wage	NRs/ day	500	3	1500	4	2000	7	3500
Jute bags	No.	10	8	80	12	120	18	180
Tools	LS	500	1	500	1	500	1	500
SUB TOTAL				**4409**		**6218**		**9344**
NON-CASH COMPONENT								
Stone	ft^3	22.7	2	45	3	68	4	91
Sand	ft^3	28.0	14	397	15	425	20	567
Gravel	ft^3	31.2	3	94	4	125	6	187
Unskilled labour	NRs/ day	200	4	800	4	800	9	1800
Bamboo, rope, water	LS	125	1	125	1	125	1	125
SUB TOTAL				**1461**		**1543**		**2770**
GRAND TOTAL				**5870**		**7760**		**12114**

Note: Above material rates are based on the 2007 Kathmandu market price. Prices may vary regionally due to transportation costs. (1 us $ = 60 Nepali Rs.)

2. FERRO-CEMENT LINED TANK*

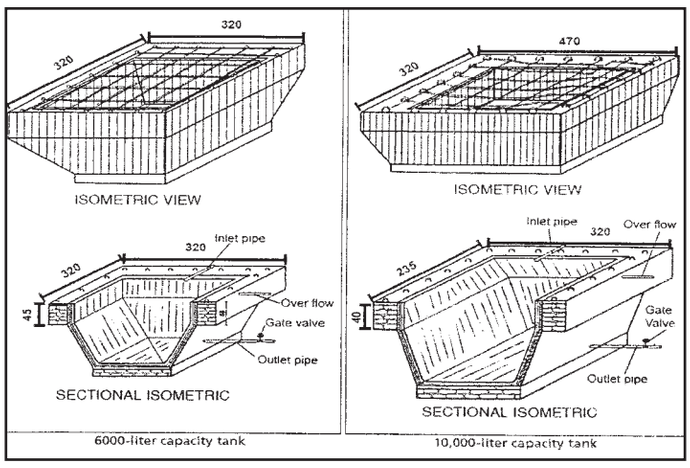

* ***All dimensions in cm***

Northeast and other hilly regions of India and other developing countries, though blessed with abundant water resources, have very low 'access' to the resource both for productive and consumptive purposes. Such a deprivation is a serious bottleneck for moving up the value chain, besides causing malnutrition, drudgery and diseases. The most innovative part of the MUS technology is to facilitate productive utilisation of the locally available small water resources in the hills- the springs and rivulets. The proposed system saves time of women and children, increases household income, improves hygiene and sanitation, empowers women and above all enhances community participation. The present and new water supply schemes in these regions need to be designed more innovatively on the suggested pattern by integration of public health, irrigation and agriculture development schemes.

International Water Management Institute

IWMI seeks to improve the management of land and water resources for food, livelihoods and environment. IWMI is one of 15 international research centers supported by the network of 60 governments, private foundations and international organizations, collectively known as the Consultative Group on International Agricultural Research (CGIAR).

www.iwmi.org

IWMI *Celebrating* 25 years 1985-2010

International Water Management Institute

IWMI New Delhi Office :
CG Block B, 2nd Floor,
NASC Complex, Dev Praksh Shastri Marg, Pusa,
New Delhi 110 012 India
Telephone: +91-11-2584 0811, 2584 0812
Telefax: +91-11-2584 2075
Web : www.iwmi.org, E-mail: iwmi-delhi@cgiar.org