AgEcon SEARCH
RESEARCH IN AGRICULTURAL & APPLIED ECONOMICS

The World's Largest Open Access Agricultural & Applied Economics Digital Library

This document is discoverable and free to researchers across the globe due to the work of AgEcon Search.

Help ensure our sustainability.

Give to AgEcon Search

AgEcon Search
http://ageconsearch.umn.edu
aesearch@umn.edu

*Papers downloaded from **AgEcon Search** may be used for non-commercial purposes and personal study only. No other use, including posting to another Internet site, is permitted without permission from the copyright owner (not AgEcon Search), or as allowed under the provisions of Fair Use, U.S. Copyright Act, Title 17 U.S.C.*

Integration of Agricultural and Energy Systems

Proceedings of a conference February 12-13, 2008
Atlanta, Georgia

Sponsored by
Farm Foundation
USDA Office of Energy Policy and New Uses
USDA Economic Research Service

Use of Distillers By-Products and Corn Stover as Fuels for Ethanol Plants*

Douglas G. Tiffany, R. Vance Morey, and Matt De Kam[1]

Introduction

Production of fuel ethanol by the dry-grind process is expanding rapidly in the U.S. and annual production capacity is expected to exceed 12 Billion gallons per year by the end of 2008 (Renewable Fuels Association, 2007). The energy required to produce ethanol continues to be an important topic in the biofuel industry, because process energy in the form of heat and electricity is the largest energy input into the ethanol production process (Shapouri, Duffield, and Wang, 2002). Natural gas has been the fuel typically used to produce process heat at these plants, while coal has sometimes been used for fuel, especially in plants greater than 100 million gallons per year of capacity. Biomass is an alternative, renewable source of energy for ethanol plants. Dry-grind corn ethanol plants produce biomass coproducts which contain a significant amount of energy when used as a fuel. Ethanol plants also are typically located near corn producing areas which have a large amount of corn stover available for use as a fuel. Biomass powered dry-grind ethanol plants could generate the electricity they need for processing as well as surplus electricity to sell to the grid. Using biomass as a fuel replaces a large fossil fuel input with a renewable fuel input which will significantly improve the renewable energy balance of dry-grind corn ethanol (Morey, Tiffany, and Hatfield, 2006). Dry-grind ethanol plants typically yield 2.75 gallons of anhydrous ethanol per bushel (56 pounds) of corn and 18 pounds of Dried Distillers Grains with Solubles (DDGS). Drying of DDGS requires approximately one-third of the natural gas used by the plant. Consideration of the coproduct DDGS as a biomass fuel reveals that there is sufficient energy to supply all needed process heat and electricity for the facility with additional energy available for electrical power generation for sale to the grid.

*Acknowledgements -- This work was supported by a grant from the Xcel Energy Renewable Development Fund as well funds from the Minnesota Agricultural Experiment Station. Colleagues at RMT, Inc. and AMEC E&C Services, Inc. made important contributions to the paper. In particular, Frank Kalany of AMEC E&C Services, Inc. provided many valuable inputs on system configurations.

[1] Tiffany is a Research Fellow, Department of Applied Economics; Morey is a Professor; and De Kam is a MS candidate, both in the Department of Bioproducts and Biosystems Engineering, all respectively, at the University of Minnesota, Twin Cities, Minnesota.

Focus of Study

The leading methods of thermal conversion of ethanol coproducts or field residues that would be technically feasible and financially prudent under a range of economic conditions were identified by De Kam, Morey, and Tiffany (2007) and include a fluidized bed and gasification as the main thermal conversion options. Technical data related to characteristics of DDGS, syrup, and corn stover were collected so that conversion of energy derived from these biomass fuels could be modified (Morey *et al*., 2006). Combustion and gasification performance of the technologies were modeled in order to predict emissions of NOx and SOx from the biomass fuels. In addition, issues of ash fusion caused by the alkali metals in the biomass were studied to help identify combustion/gasification strategies that will have operational reliability.

Objectives

The main objectives of this paper are to identify opportunities to significantly improve the carbon footprint of ethanol produced from corn starch with processes and methods that are available today. This is achieved through technical integration of several biomass energy conversion systems into the dry-grind corn ethanol process, requiring system designs capable of providing necessary process heat while meeting prevailing air emissions standards. Next, the economic performance of biomass-powered ethanol plants are compared with conventional plants that utilize purchased natural gas and electricity.

1. Technical Integration

Methods

The technical analysis for integrating biomass energy into the dry-grind ethanol process is described in detail in De Kam, Morey, and Tiffany (2007). The analysis was performed primarily using Aspen Plus process simulation software. An As-

pen Plus model of the dry-grind ethanol process was obtained from the USDA Agricultural Research Service (McAloon *et al*., 2000; McAloon, Taylor, and Yee, 2004; Kwiatowski *et al*., 2006), and was altered to accommodate the energy conversion systems. Biomass systems with a rated annual capacity of 50 million gallons of denatured ethanol were modeled. The primary components of the process such as fermentation, distillation, and evaporation were not changed. Only those components impacted by using biomass fuel were modified. They included steam generation (biomass combustion or gasification), thermal oxidation, coproduct drying, and emissions control. Process data from several ethanol plants participating in the project were also taken into account in the modeling process. Finally, analysis was performed on several economic variables to highlight the sensitivity of the findings.

Three biomass fuels were included in the analysis – DDGS, corn stover, and a mixture of corn stover and "syrup" (the solubles portion of DDGS). Three levels of technology were analyzed for providing energy at dry-grind plants. They included: 1) process heat only, 2) process heat and electricity for the plant – combined heat and power (CHP), and 3) CHP plus additional electricity for the grid. The limit for the third case was defined in terms of the maximum energy available if all of the DDGS were used to provide process heat and electricity. A conventional ethanol plant using natural gas and electricity was also modeled to provide comparison information for the economic analysis.

Fluidized bed combustion was used for corn stover and the mixture of corn stover and syrup. Fluidized bed gasification was used for DDGS to overcome problems with low ash fusion temperatures. Appropriate drying modifications were made to accommodate each fuel/conversion configuration. The necessary emissions control technologies, primarily for oxides of nitrogen (NOx) and oxides of sulfur (SOx), were also modeled for each configuration. In order to determine the extent of potential emissions issues, the properties of the biomass were analyzed.

Biomass Property Data

A typical dry-grind corn ethanol plant produces DDGS as a coproduct. DDGS is a mixture of two process streams called distiller's wet grains (DWG) and concentrated distiller's solubles (also known as "syrup"). The DWG and syrup are mixed and dried together to become DDGS. Property data for these process streams and corn stover were needed in order to build an accurate model. Morey *et al*. (2006) provided an analysis of the fuel properties of these streams based on data taken from five dry-grind ethanol plants, as well as a fuel characterization of corn stover. Table 1 provides a summary of some of the important biomass property data.

Emissions Estimates

An engineering consulting firm, RMT, Inc., assisted in generating the predictive emissions estimates from the various thermal conversion technologies and fuel combinations. Computational fluid dynamics modeling was performed for several scenarios with the results focusing mainly on emissions of oxides of nitrogen (NOx) and oxides of sulfur (SOx). An equilibrium model (minimization of the Gibbs function) was used to simulate the combustion reaction in Aspen Plus. The computational fluid dynamics emissions estimates were used to adjust the emissions output of the Aspen Plus models.

Definition of Technology Combinations

Defining technology combinations was an iterative process of gathering industry data from vendors, ethanol plants, literature, and engineering firms, then modeling certain scenarios to determine their feasibility. Engineering consulting firms, AMEC and RMT Inc., assisted in the development of suitable technology combinations.

Thermal Conversion

Fluidized bed combustion and gasification were the main thermal conversion options evaluated in the analysis. Fluidized bed combustion was a good candidate because of its capacity to utilize high moisture fuels with the option of adding limestone as a bed material to control SOx emissions. Fluidized bed gasification has the added benefit of lower operating temperatures which was important because of the low ash fusion temperatures of DDGS. Gasification also permits greater control of the conversion process through the option of producer gas cleanup before subsequent combustion.

Drying and Thermal Oxidation

Conventional dry-grind ethanol plants generally use natural gas direct fired dryers (rotary, or ring type) to dry the DDGS. In a plant powered by solid fuel, a common option is to use steam tube (indirect heat) rotary dryers. In this setup steam from the boiler provides heat to the wet material and air in the dryer through a series of tubes arranged inside the rotating dryer cylinder.

When gasification is used as the thermal conversion process the option exists to modify a natural gas fired dryer to utilize producer gas as a fuel. This method requires some producer gas cleanup processes.

In the analysis, steam tube dryers had their dryer exhaust routed to the combustion unit where thermal oxidation occurred. The assumption made for modeling purposes in terms of thermal oxidation was that the combustion reactor average temperature had to be greater than 816° C (1500° F) (Lewan-

Table 1. Selected Biomass Property Data [a]

Fuel	Moisture Content	HHV	Nitrogen	Sulfur
	(% wet basis)	(MJ/kg dry matter)	(% dry matter)	(% dry matter)
Corn Stover	13	17.9	0.7	0.04
Syrup	67	19.7	2.6	1.0
DDGS	10	21.8	4.8	0.8
DWG	64	22.0	5.4	0.7

[a]Morey *et al*. (2006).

dowski, 2000). Future analyses may include several alternative dryer options.

Emissions Control

The emission estimates and technology specifications were made using data from the literature on emissions control technology and suggestions from the partner engineering firms. Combustion modeling results from RMT and our own calculations indicated that for the chosen system sizes most cases would need to be classified as a major source due to the emissions of NO_x and/or SO_x (U.S. EPA, 2006).

For the purposes of this paper SO_x emission potential was calculated based on the amount of sulfur in the fuel. Destruction efficiencies for each control technology were estimated and used to calculate the resulting air emissions data. Fluidized bed combustors allow for the use of limestone as a bed material, which helps to reduce SO_x emissions. In the DDGS gasification cases, flue gas desulfurization semi-dry scrubbers were used to reduce SO_x emissions. Emissions of NO_x were controlled using selective non-catalytic reduction (SNCR) via injection of ammonia into the boiler.

There are indications that chlorine emissions from the fuels will need to be controlled by installation of scrubbers. Although costs for treatment of chlorine have not been included, they are expected to be minor. Emissions of particulate matter were not simulated in the analysis although the necessary particulate removal equipment was specified in each case. The particulate removal equipment (cyclones, baghouse, etc.) was specified using estimates from similar processes.

Steam Cycle and Electricity Production

Several variations of steam turbine power cycles were used to generate electricity in this analysis. Each fuel combination and technology scenario was analyzed on three levels of electricity production.

At the first level, the system simply provides the process heat needed to produce ethanol and dry the coproduct. No electricity is generated. The second level system generates steam at an elevated temperature and pressure and uses a backpressure turbine to produce electricity.

The limiting factor for electricity production in this case is that all the outlet steam from the turbine needs to be used for ethanol production and coproduct drying. Under these constraints the actual amount of electricity produced is very close to meeting the ethanol plant requirements. Because of this, the second level of electricity production will be referred to as CHP (Combined Heat and Power). At the third level a surplus of steam is generated at high temperature and pressure and is used to drive extraction type turbines.

Technical Integration Power Scenarios

Three combinations of fuel and thermal conversion technology were analyzed, each at the three different levels of electricity generation. For each case, system performance results are presented.

Corn Stover Combustion

The first option analyzed was the direct combustion of corn stover in a fluidized bed. The corn stover was assumed to be densified at an off-site facility. Figure 1 shows a simplified process flow diagram of this case. At the heart of the process is the bubbling fluidized bed boiler. The dryer exhaust stream is routed through the combustor to accomplish thermal oxidation of the volatile organic compounds it contains. Oxides of nitrogen are controlled using SNCR at the boiler. Particulate matter is removed from the flue gas by cyclones and a baghouse. At the first level, no electricity is generated.

At the second level, electricity is generated using a backpressure turbine. Steam is produced at 6.3 MPa (900 psig) and 482°C (900°F), then expanded through a backpressure turbine to 1.1 MPa (150 psig) (see Figure 2). Some de-superheating is then necessary to provide saturated steam to the ethanol process and the coproduct dryer.

The third level of electricity production uses an extraction turbine. A surplus of steam is generated in the boiler at 6.3 MPa (900 psig) and 482°C (900°F). Process steam is extracted from the turbine at 1.1 MPa (150 psig) (see Figure 3). The remaining steam continues through the low pressure stage of the turbine and is condensed.

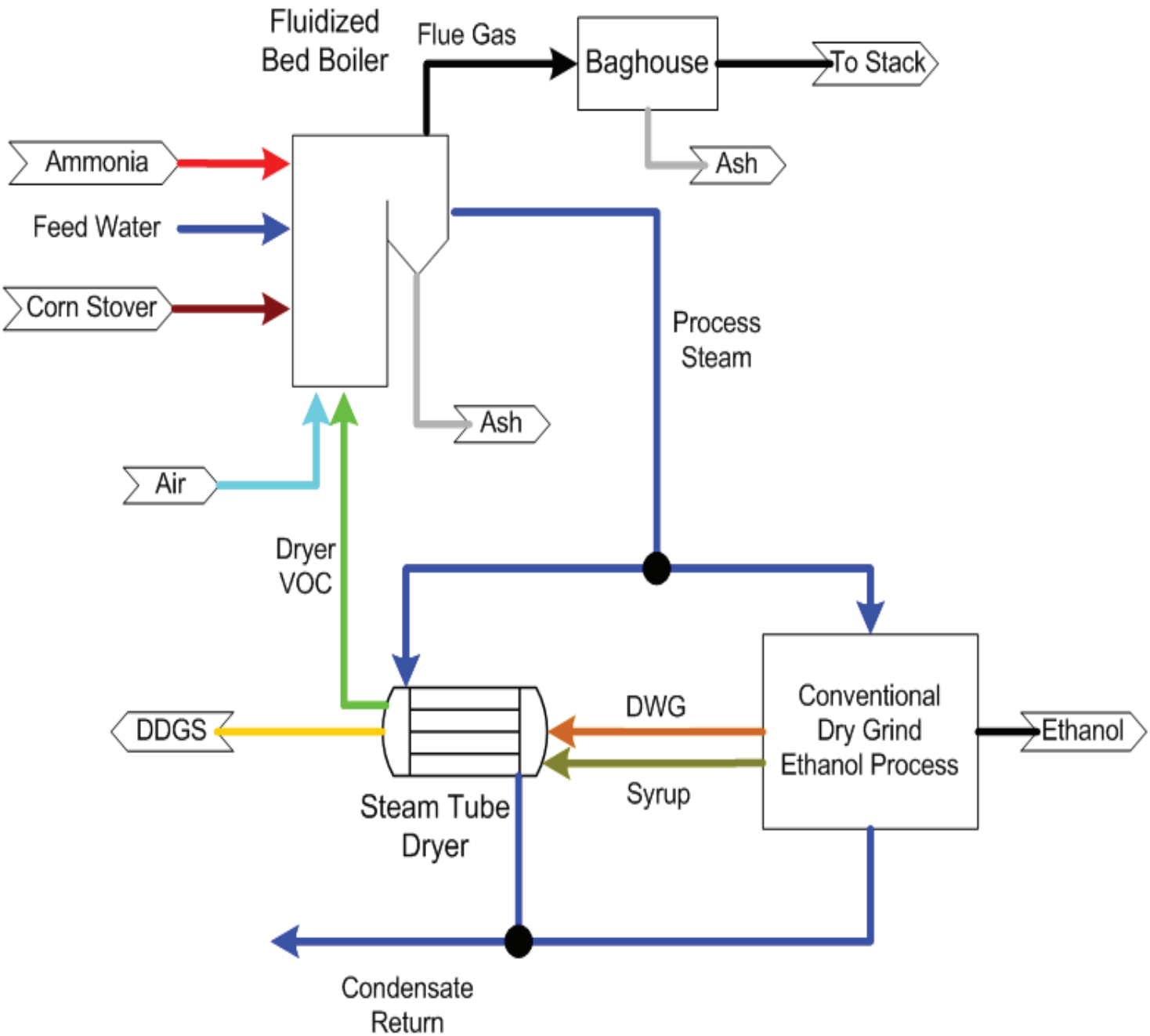

Figure 1. Corn Stover Combustions, Level 1: Process Heat Only

Syrup and Corn Stover Combustion

The second option analyzed was combustion of the syrup coproduct supplemented with corn stover. The process flow diagrams for this system are essentially the same as the corn stover combustion case except that the syrup co-product is not dried, but rather combusted in the fluidized bed boiler along with corn stover. Limestone is used as the bed material in the combustor to reduce emissions of SO_x. The drying operation in this case is much smaller because only the DWG co-product must be dried. This makes the overall process steam load smaller as well.

Figure 4 shows fuel energy input from syrup and corn stover for each level. The amount of fuel used is shown in Figure 5. The average moisture contents of the fuel mixture for the process heat, CHP, and CHP + grid scenarios were 56%, 53%, and 44% respectively.

DDGS Gasification

The final option analyzed was the gasification of DDGS. Once again the three options reflecting greater intensity of biomass usage reflect the process models of Figures 1, 2, and 3. The system chosen uses an air-blown fluidized bed gasifier to convert the DDGS into producer gas. Particulates are removed from the gas stream in high-temperature

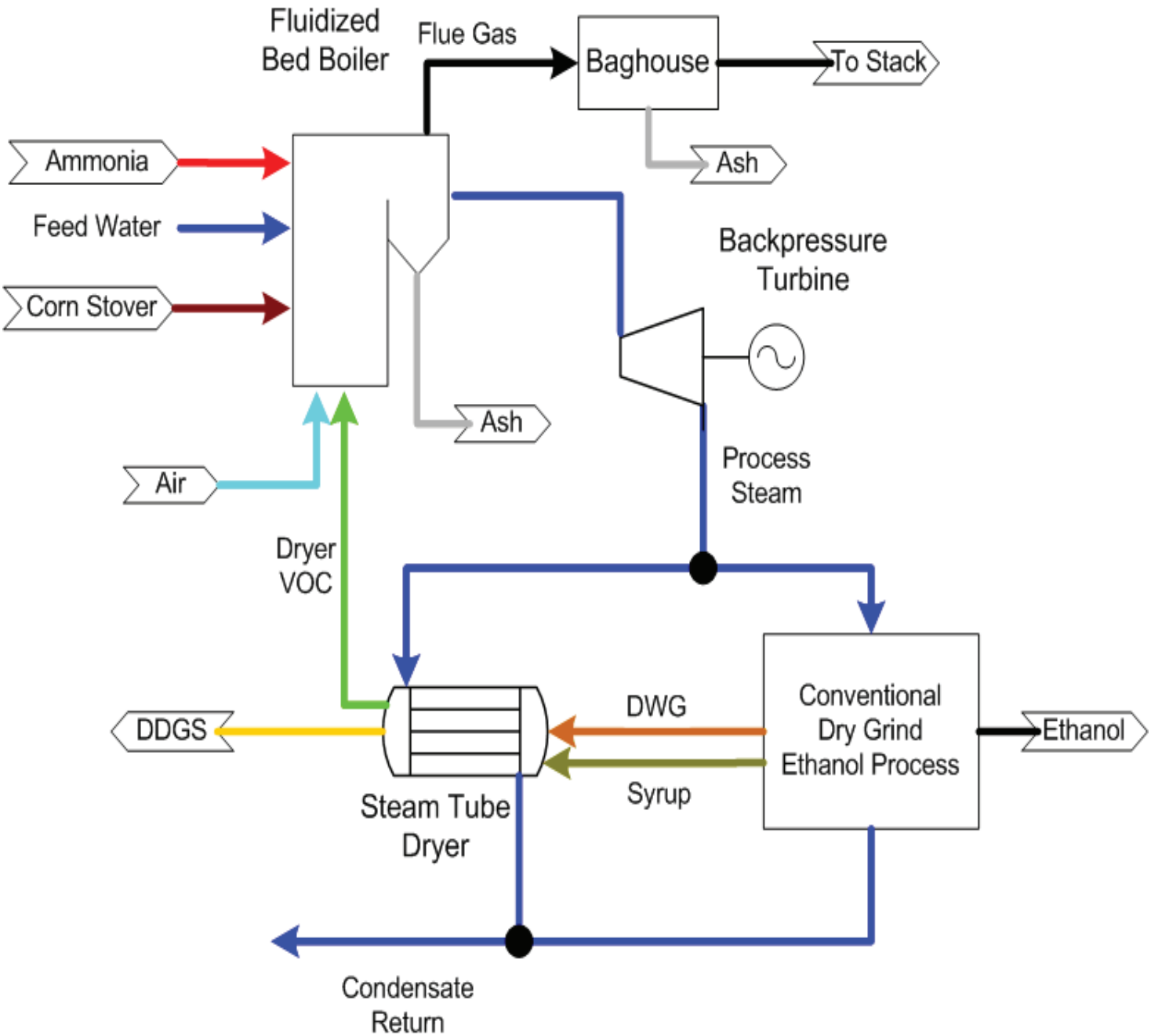

Figure 2. Corn Stover Combustions, Level 2: CHP

cyclones. The producer gas is not allowed to cool significantly in order to avoid condensation of tars. A staged combustion reactor is used to combust the producer gas. Ambient air and exhaust from the DDGS dryer are added at separate stages. This combustion reactor acts as a thermal oxidizer for the dryer exhaust stream and eliminates that capital expense. Immediately following the combustor is a heat recovery steam generator (HRSG) where steam is produced for the ethanol process, coproduct drying, and electricity production depending on the specific case. Emissions of NO_x are controlled using SNCR ammonia injection during combustion. A semi-dry scrubber using a lime slurry is then utilized to reduce the emissions of SO_x.

Technical Integration Results

System Performance Comparison

Figure 4 shows fuel energy input from syrup and corn stover for each level. The amount of fuel used is shown in Figure 5. The average moisture content of the fuel mixtures for the process heat, CHP, and CHP + grid scenarios were 56 percent, 53 percent, and 44 percent respectively.

Table 2 presents some of the performance data of interest from each case. In general the combustion of corn stover makes most efficient use of the fuel energy input due to its simplicity and relatively low fuel moisture content.

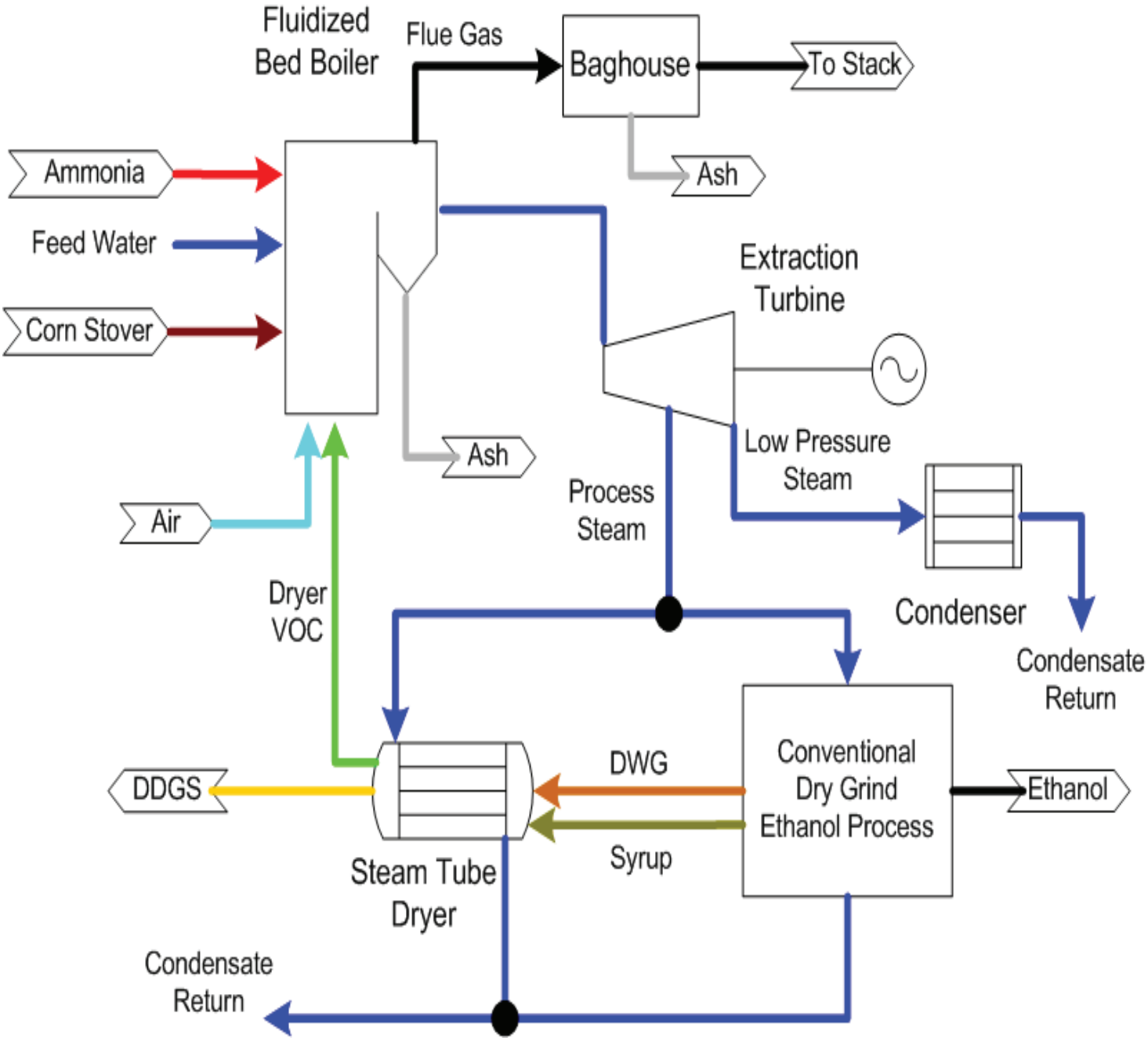

Figure 3. Corn Stover Combustions, Level 3: CHP and Electricity to the Grid

However, in the syrup and corn stover combustion cases the energy for drying the syrup coproduct is effectively hidden in the lower system thermal efficiency. This is because the syrup moisture is vaporized in the combustor where it decreases the boiler efficiency rather than being evaporated in the dryer via process steam where the energy would be counted as a useful output of the system. This dynamic also explains why less electricity is generated in level 2 of the syrup and corn stover combustion cases. Less process steam is required for drying the coproduct since only DWG is being dried. This limits the amount of steam flowing through the backpressure turbine, since all of the output steam must be used to meet process needs.

The renewable energy ratio for each case was calculated following the assumptions presented in a previous study (Morey, Tiffany, and Hatfield, 2006). The renewable energy ratio is defined as follows:

(Energy in Ethanol + Coproduct Energy + Electricity to Grid Energy) ÷ Fossil Energy Input

The energy use and credit assumptions made by Morey, Tiffany, and Hatfield (2006) use data from Shapouri, Duffield, and Wang (2002) as a basis for these calculations. Some slight changes have been made to the electricity use assumptions for the purposes of this report. An updated value of 0.2 kWh/L of ethanol produced (0.75 kWh/gal) was

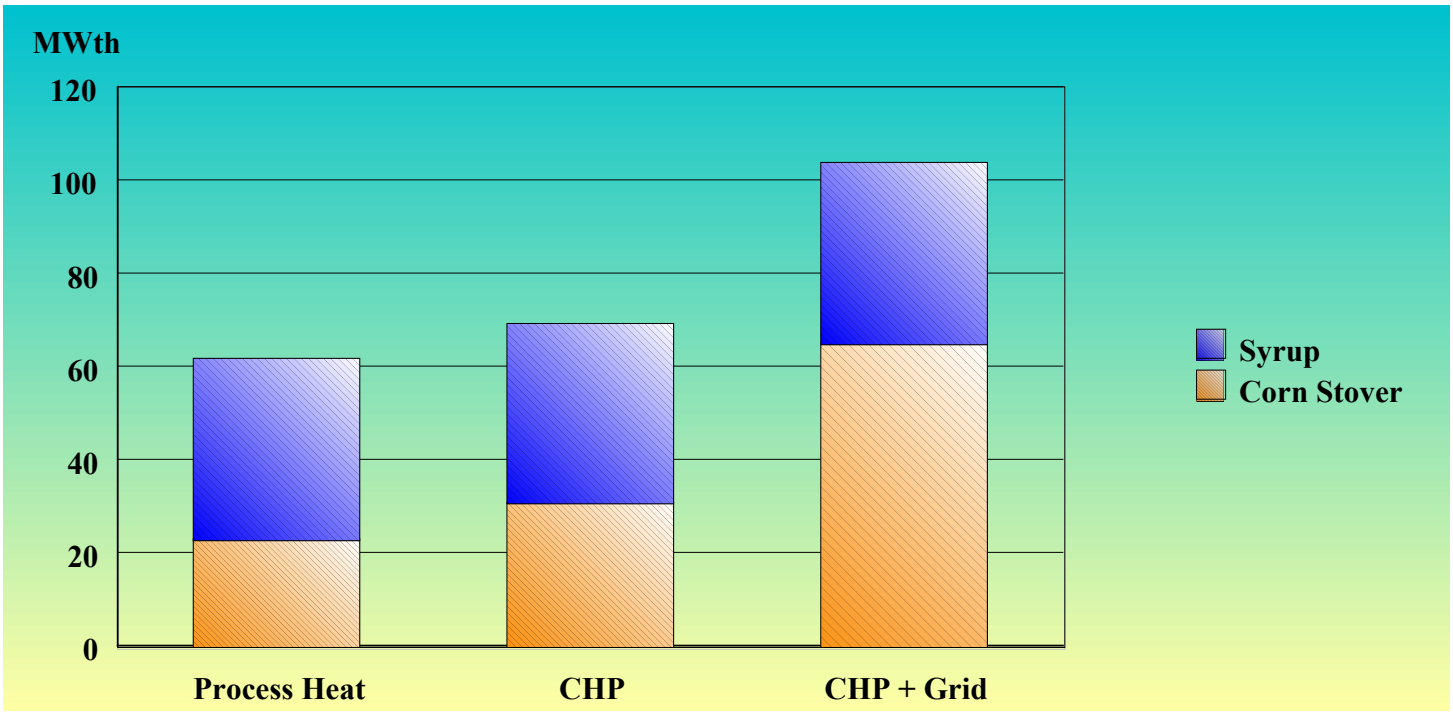

Figure 4. Syrup and Corn Stover Combustion: Fuel Energy Input Rate Contribution (HHV)

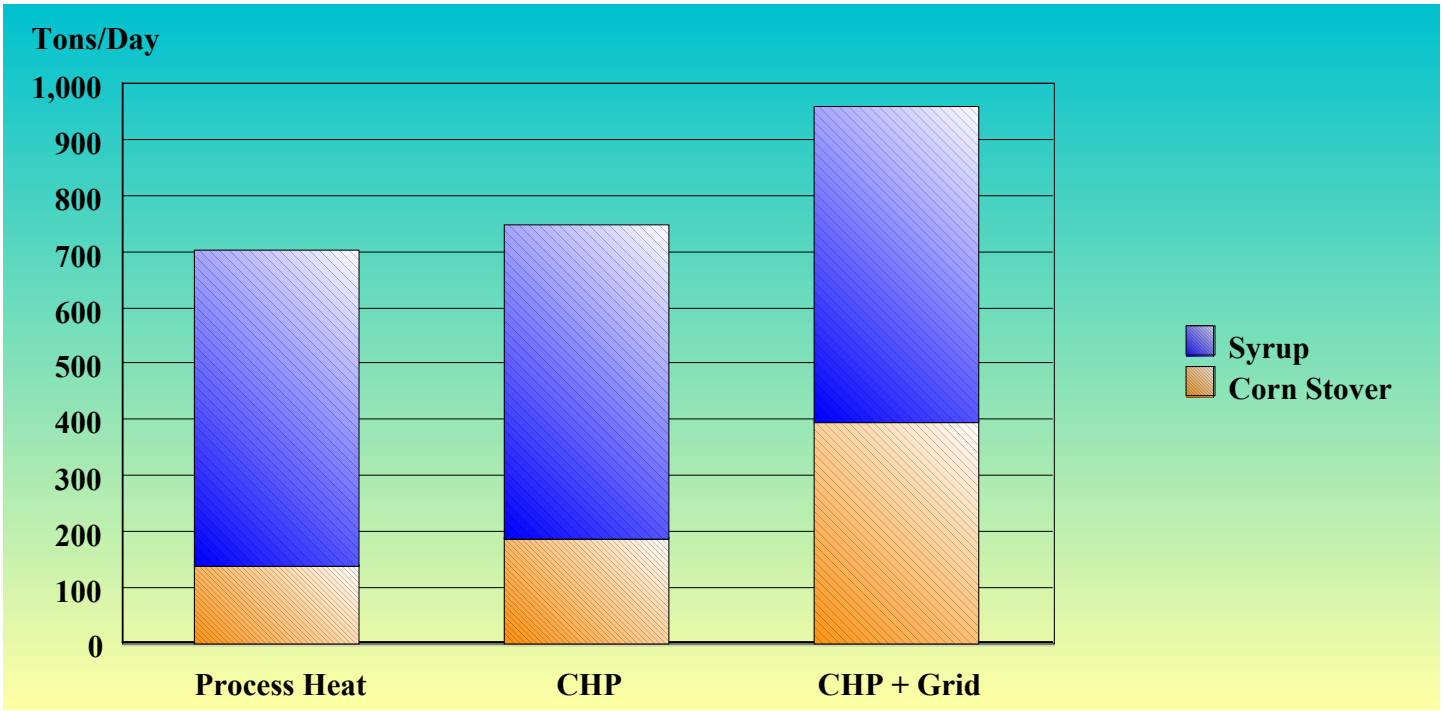

Figure 5. Syrup and Corn Stover Combustion: Fuel Use

used for the electricity demand in the conventional natural gas ethanol plant calculations. We estimated the electricity demand of the biomass fueled ethanol facilities to be higher at 0.25 kWh/L (0.95 kWh/gal) due to added equipment. Also, some of the equipment contributing to the parasitic electric load was modeled. These loads were subtracted from the gross electricity production for each case.

Figure 6 shows the comparison of renewable energy ratio between the modeled cases and a conventional dry-grind corn ethanol plant. It can be seen that using biomass as a fuel can greatly increase the renewable energy balance of ethanol production.

Table 2. System Performance Results for a 50 Million Gallon Per Year Dry-Grind Ethanol Plant[a]

	Biomass Fuel Use[b] (Wet Basis)	Fuel Energy Input Rate	Power Generated (Gross)	Power to Grid (Net)[c]	Power Generation Efficiency	System Thermal Efficiency[d]
	(T/day)	(MW_{th})	(MW_e)	(MW_e)		
Corn Stover Combustion						
Level 1: Process Heat Only	400	66	0	-6.0	--	80.5%
Level 2: CHP	458	75	6.6	0.4	8.8%	78.9%
Level 3: CHP & Elec. to Grid	634	104	13.0	6.8	12.5%	63.1%
Syrup & Corn Stover Combustion						
Level 1: Process Heat Only	702	62	0	-6.2	--	70.1%
Level 2: CHP	749	70	5.4	-0.7	7.8%	69.7%
Level 3: CHP & Elec. to Grid	959	104	12.9	6.7	12.4%	53.8%
DDGS Gasification						
Level 1: Process Heat Only	350	72	0	-6.2	--	73.3%
Level 2: CHP	402	83	7.0	0.8	8.5%	72.2%
Level 3: CHP & Elec. to Grid	506	104	11.5	5.2	11.1%	61.6%

[a]All energy and power values in this table are based on fuel Higher Heating Value (HHV).

[b]Moisture contents: Corn stover - 13%; Syrup & corn stover - 56%, 53%, and 44% for levels 1, 2, and 3 respectively; DDGS - 10%

[c]Negative values refer to power purchased from the grid by the ethanol facility

[d]Efficiency of converting fuel energy into other useful forms of energy (process heat and electricity)

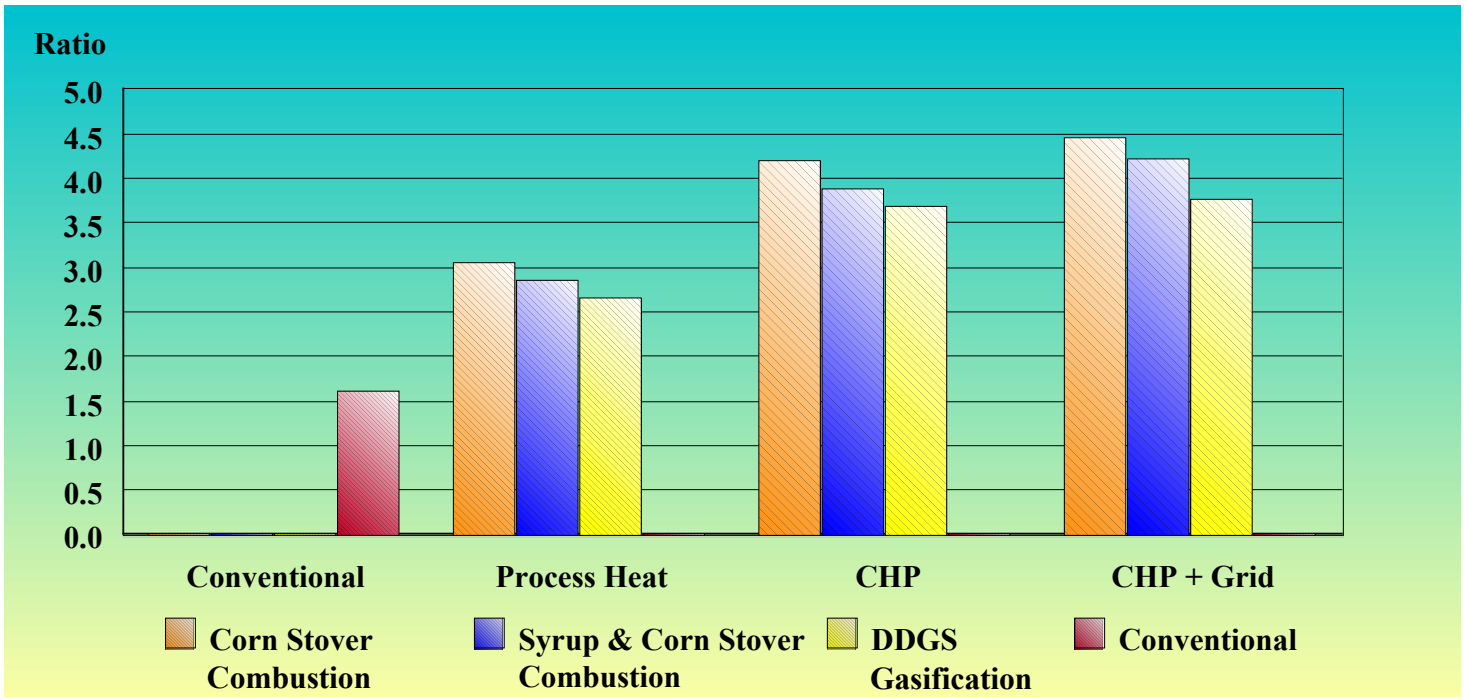

Figure 6. Renewable Energy Ratio (LHV)

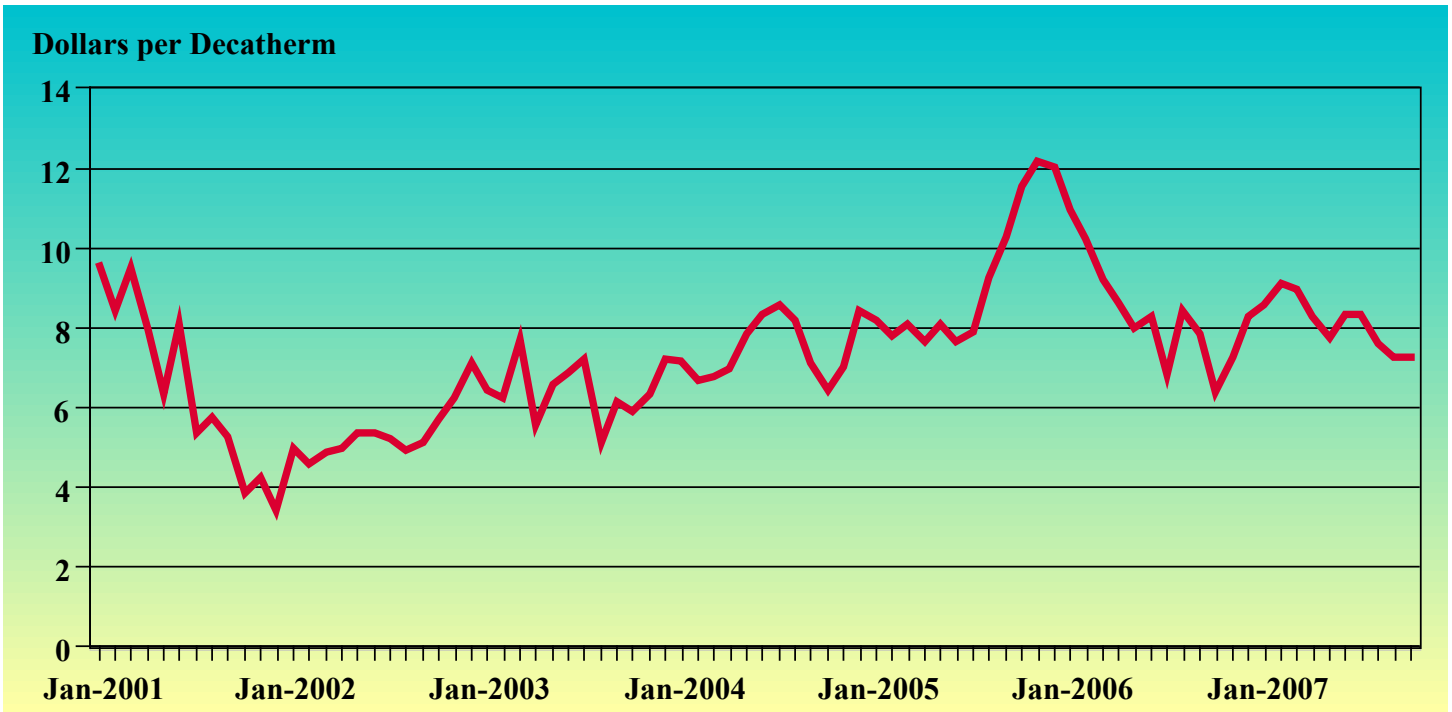

Figure 7. Industrial Natural Gas Prices in Iowa from 2001-Ocotober, 2007 (U.S. Department of Energy, Energy Information Agency, 2007)

2. Economic Analysis

Key Economic Drivers for Adopting Biomass

Natural gas costs are the second largest operating cost for dry-grind ethanol plants, following only the cost of the corn as an operating expense. At this time of expansion of dry-grind ethanol production in the U.S. Corn Belt, demands for natural gas are also expanding rapidly, which exacerbates supply issues on natural gas lines of limited capacity in certain rural areas. Figure 7 shows the history of natural gas prices in Iowa, the heart of the U.S. Corn Belt, with the effects of damage to natural gas infrastructure caused by Hurricane Katrina becoming evident in August of 2005.

Electricity costs are not as important to ethanol plant economics in magnitude, but plants have a self-interest in producing enough power on-site in order to maintain uninterrupted operation of computers, process controls, and other vital systems. In some areas, local power providers would welcome the ability of newly established ethanol plants to provide their own power in order to avoid heavy investments to upgrade distribution capacity. In addition, there are improving incentives available to ethanol plants and other facilities to produce power for the grid from biomass as individual states establish goals that increase the renewable percentage of the power used within their borders.

In the years before 2006, revenues from sales of distillers dried grains and solubles (DDGS) often represented 20% of the total revenue stream of dry-grind plants; however, since that time the percent of total revenues from this by-product has fallen to about half of that amount. Given the rapid expansion of ethanol capacity that is underway in the U.S., it will be improbable for U.S. livestock populations to consume the burgeoning production of this by-product. One of the reasons why U.S. livestock can't consume the increased production of DDGS stems from the maximum potential inclusion rates for this mid-level protein feed when fed to certain classes of livestock. DDGS contain nutritional energy, but contain a form of fat that some species of animals can't tolerate at high intake rates while achieving favorable performance. Dairy cows experience milkfat depression when fed diets too high in the fats found in DDGS. Swine and poultry have lower abilities to utilize DDGS in their diets due to adverse effects of the dietary fat on carcass quality and due to the poor balance of amino acids, respectively.

As a feedstuff, DDGS have been hampered by issues of variability due to differences in corn quality (year to year) as well as ethanol plant operational issues involving the amount of concentrated solubles (syrup) dried with the dry portions of the stillage. The control and management of the DDGS dryers can cause a problem in feed quality when syrup balls are formed in DDGS. The composition of solubles in the DDGS and the manner in which they are dried or handled can also affect issues such as caking when the DDGS are shipped. Figure 8 shows a history of DDGS prices, which have historically been highly correlated with and about equal to corn prices on a per ton basis. Table 3 demonstrates the challenge of feeding the production of

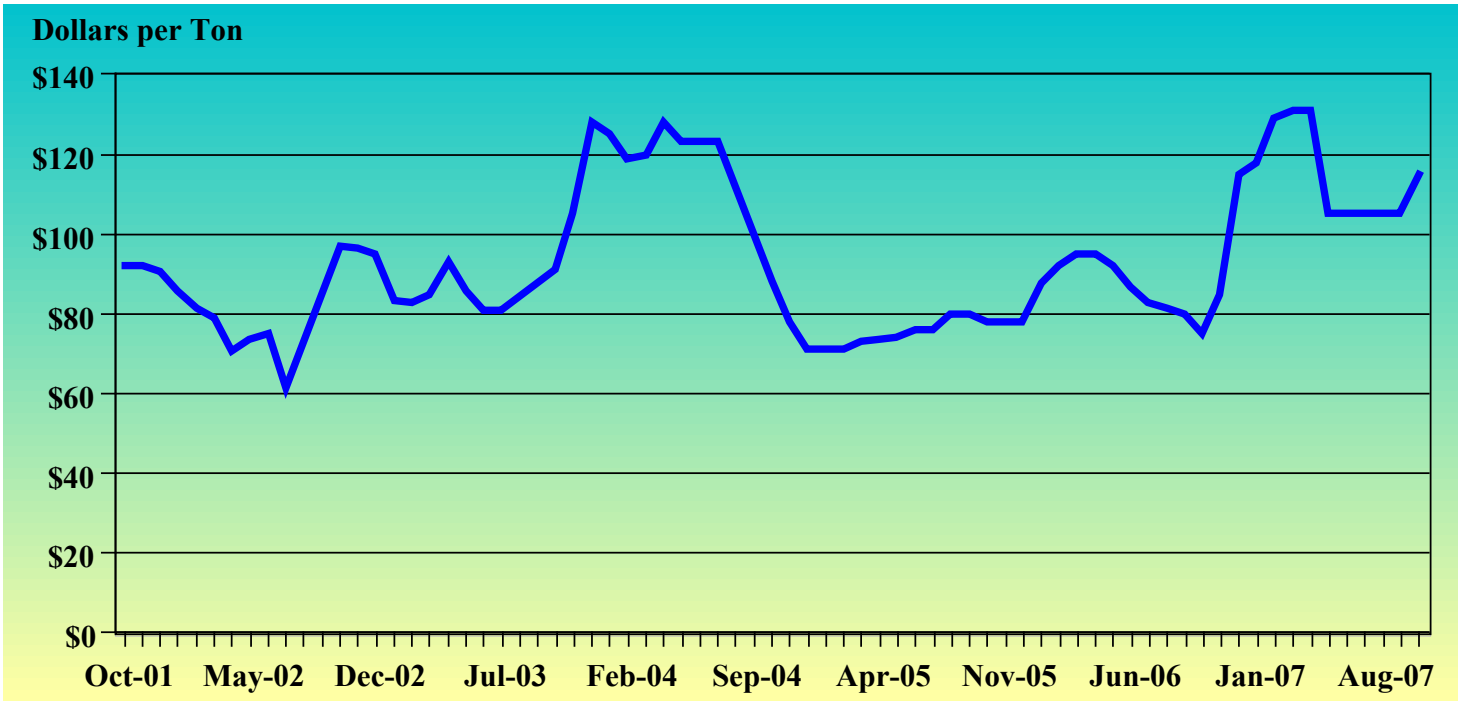

Figure 8. Historical Prices of Distillers Dried Grains at Lawrenceburg, Indiana (USDA, ERS Feed Grains Database)

Table 3. Consumption of Available DDGS (28 Million Metric Tons) by Percent of Market Penetration Based on Annual Ethanol Production of 10 Billion Gallons

Species	Millions of Grain-Consuming Animal Units	Maximum Rate of Inclusion	Millions of Metric tons Market Penetration Percent 50%	75%	100%
Dairy	10.2	20%	1.9	2.8	3.8
Beef	24.8	40%	9.2	13.8	18.4
Pork	23.8	20%	4.3	6.5	8.7
Poultry	31.1	10%	2.9	4.3	5.8
Total	89.9		18.3	27.4	36.6

Source: Geoff Cooper, National Corn Growers, in Distillers Grains Quarterly, 1st Qtr., 2006.

U.S. DDGS projected to be produced by 2009 at maximum dietary inclusion rates to the 2006 U.S. livestock population. Based on this table, it will require maximum dietary inclusion rates fed to 75% of the livestock populations to approach consumption of the amount of DDGS produced in 2009.

Use of by-products of the ethanol plant (DDGS, DDG, or syrup) or use of corn stover as a fuel to operate the plant can improve the net energy balance of the whole process of making fuel ethanol from corn. This occurs because fossil sources of energy are replaced by renewable sources. Morey, Tiffany, and Hatfield (2006) estimated net renewable energy values for corn ethanol with biomass to operate the plant comparable to estimates for cellulosic ethanol based on biochemical processes.

Low Carbon Fuels Standards

The efforts of California and growing interests on the national level to reduce the carbon footprint of the fuel supply should establish higher prices for ethanol produced by methods that result in lower emissions of greenhouse gases. California's goal is to reduce greenhouse gases from the transportation sector by 10% by 2020. As California's AB-32 Legislation is implemented, firms selling fuels in that state should be willing to pay more for ethanol produced with a low-carbon footprint whether due to the feedstock used, the source of the imbedded energy in the fertilizer used or other factors affecting imbedded energy usage.

Well to wheels studies by Wang, Wu, and Huo (2007) of Argonne National Laboratory reveal that use of biomass as a source of process heat and power in ethanol plants results in nearly a three-fold reduction in greenhouse gas emis-

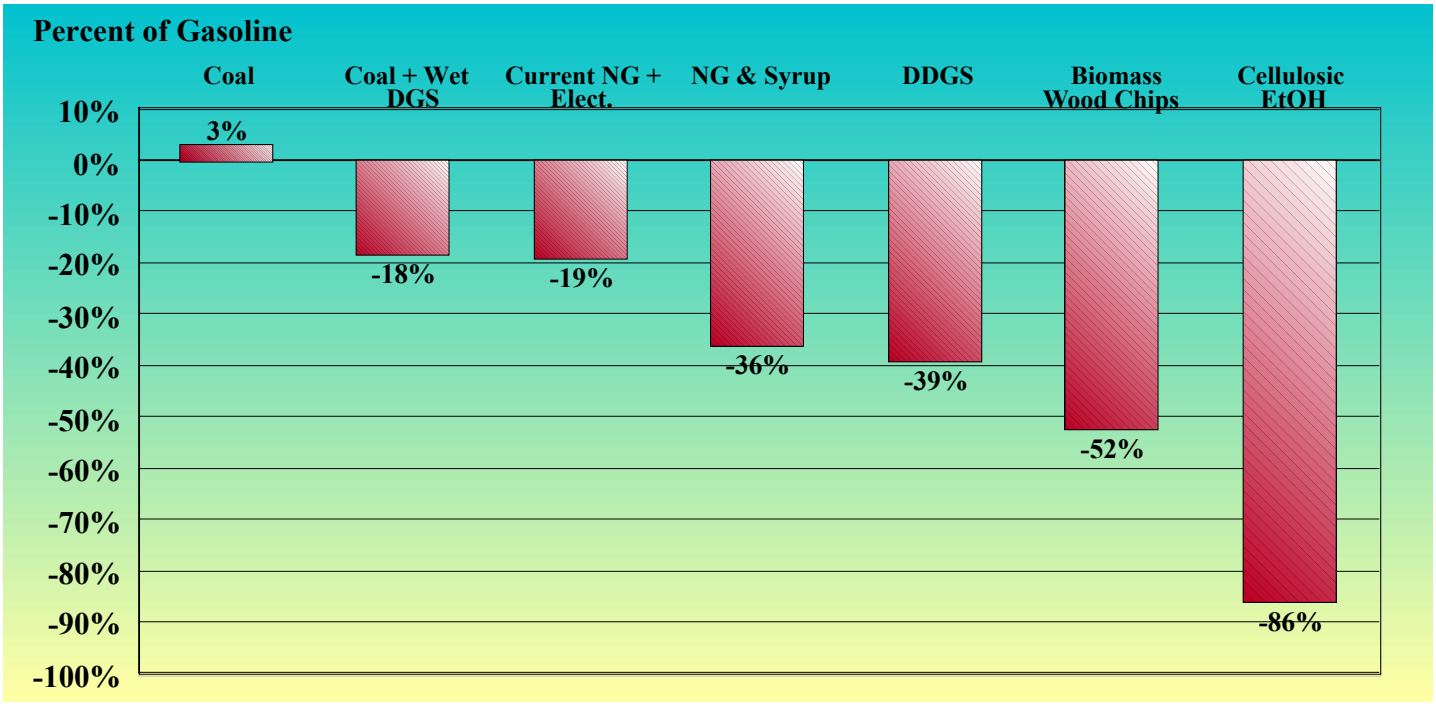

Figure 9. Wells to Wheels Greenhouse Gas Emissions Changes from Fuel Ethanol Produced Using Various Fuels and Conversion Assumptions at the Plant Relative to Gasoline (Wang, Wu, and Huo, 2007)

sions compared to using the current fuel of natural gas and purchased electricity (Figure 9). This data implies that a California fuel supplier would need to purchase and transport one-third as much ethanol to blend in order to achieve equivalent GHG reductions if the ethanol were produced at a plant using biomass for process heat and electricity. Ethanol produced at plants using biomass fuels, with a lower carbon footprint than ethanol produced at plants using natural gas and purchased electricity, should command a price premium in the market related to savings in freight required to move ethanol from the Corn Belt to California.

Methods

Estimating Capital Costs

The Aspen Plus model estimated important material and energy flows which allowed us to specify the capacities of the required capital equipment. Using these capacities, an engineering firm was consulted to specify equipment to meet these requirements. The consulting engineering firm then estimated equipment costs using data from previous projects and by soliciting bids from potential vendors for some items. Cost estimates are categorized according to new equipment and the equipment that would be replaced (avoided cost) compared to a conventional dry-grind plant. The analysis evaluated the net change in equipment cost required to construct a dry grind ethanol plant to use biomass rather than natural gas and purchased electricity as energy sources.

In the biomass scenarios, we assumed that a package natural gas boiler would be included for backup and also perhaps to phase in biomass as a fuel source over time, so the cost of that equipment was not deducted from the conventional base case of a natural gas powered plant. However, we were able to eliminate the capital costs of the thermal oxidizer that would be required in the natural gas-fired conventional plants.

Equipment costs for new items were first estimated, and then other costs associated with the project were added. Among these were installation, building, electrical, contractor costs and fees, engineering, contingency, and escalation to arrive at the total project cost for new items (Tiffany, Morey, and De Kam, 2007). Total project costs prevailing in 2007 (including operating capital) for conventional (natural gas) dry-grind plants obtained from design-build firms and bankers (Eidman, 2007) are shown in Table 4. Net (new – avoided) project costs for biomass systems are added to the cost of conventional plants to obtain total capital cost estimates for 50 million gallon per year biomass fueled plants.

Cost estimates for the 100 million gallon per year plants are developed based on the ratio of the plant sizes (100/50 = 2). The cost estimating factor for the 100 million gallon plant is $(2)^{0.7}$ or 1.62. Thus, the cost for 100 million gallon plant is estimated to be 1.62 times the cost for a 50 million gallon plant for a similar fuel and level. This technique of adjusting costs for scale is commonly used in many chemical and industrial processes. Based on responses from design/builders of ethanol plants, efforts to optimize and de-

Table 4. Nameplate Installed Costs for Conventional and Biomass-Fueled Dry-Grind Ethanol Plants

	50 Million Gallon Plants		100 Million Gallon Plants	
Type	Capital Cost	Nameplate Cost	Capital Cost	Nameplate Cost
		($/gal)		($/gal)
Conventional	$112,500,000	$2.25	$182,756,789	$1.83
Corn Stover				
Process Heat	$147,120,000	$2.94	$238,997,145	$2.39
CHP	$162,938,000	$3.26	$264,693,562	$2.65
CHP + Grid	$180,590,000	$3.61	$293,369,321	$2.93
Corn Stover + Syrup				
Process Heat	$136,522,000	$2.73	$221,780,643	$2.22
CHP	$150,769,000	$3.02	$244,924,963	$2.45
CHP + Grid	$168,372,000	$3.37	$273,521,121	$2.74
DDGS				
Process Heat	$142,465,000	$2.85	$231,435,075	$2.31
CHP	$156,279,000	$3.13	$253,875,985	$2.54
CHP + Heat	$171,637,000	$3.43	$278,825,129	$2.79

bottleneck plants can raise capacity 6% in the case of coal or biomass plants and 20% or more in the case of conventional plants (Nicola, 2005). Nameplate installed costs are summarized for the nine fuel/technology combinations in Table 4.

Estimating Operating Costs and Other Baseline Assumptions

Table 5 contains the key baseline assumptions that affect profitability of the dry-grind ethanol plants being evaluated. It includes assumptions about the levels of debt and equity in the plant as well as the overall interest rate charged on the debt. A hurdle rate of return (ROR) on equity can be established, and the number of years assumed for depreciation can be established.

Baseline ethanol price is established at $1.80/gallon received at the ethanol plant. Corn price is assumed to be $3.50/bushel (for the next ten years) based on the 2007 Baseline Report of the U.S. Department of Agriculture (2007). Natural gas is established at $8 per decatherm (1.06 million kJ or 1 million BTUs). Electricity is assumed to be priced at $0.06 per kWh under baseline conditions, whether the plant is buying or selling.

DDGS are established at the price of $100/ton. In the scenarios when the syrup is combusted, the resulting by-product is DDG, which we assume has a market value 120% of conventional DDGS. We base this on presumed attributes of greater consistency and the higher inclusion rates that DDG should offer to producers. Corn stover is assumed to be priced at $80/ton when it is delivered in a dry, densified form at the plant gate (Sokhansanj and Turhollow, 2004; Petrolia, 2006). The value of ash is assumed to be $200/ton based on reported values for the ash collected at Corn Plus Ethanol, in Winnebago, MN.

The low-carbon premium is established at 20¢/gallon for each unit of ethanol produced using biomass, based upon the savings in transportation costs that accrue when California ethanol buyers are able to purchase ethanol having a carbon imprint 1/3 that of ethanol produced at conventional dry-grind plants using natural gas and purchased electricity. In biomass cases that produce only process heat, it is assumed that 90% of the maximum credit is captured when biomass substitutes for process heat. The Federal Renewable Energy Electricity Credit of $.019/kWh is assumed to be received by the ethanol plant (even though it may be necessary for a private or corporate entity with sufficient passive income and tax liability to own the electrical generation equipment). There are additional minor assumptions including the Renewable Fuel Standard tradable credit of 10¢/gallon that approximates the average transportation and storage cost for the average unit of ethanol that gets produced and used in the U.S.

Certain expense items can be considered scale-neutral and are applied equally in 50 million gallon and 100 million gallon plants. These include per gallon expenses for enzymes, yeasts, process chemicals & antibiotics, boiler & cooling tower chemicals, water and denaturants. We assume $.04 per gallon of enzyme expense, $.004 per gallon of yeast expense, processing chemicals & antibiotics of $.02 per gallon (Shapouri and Gallagher, 2005). We also assume boiler and cooling tower chemical costs of $.005 and water of $.003 per gallon of denatured ethanol produced. We assume $120,000 of real estate taxes, $840,000 of licenses, fees & insurance, as well as $240,000 in miscellaneous

Table 5. Common Assumptions for all Systems

Category	Baseline Values
Debt-Equity Assumptions	
Factor of Equity	40%
Factor of Debt	60%
Interest Rate Charged on Debt	8%
Depreciation Period	15 years
Output Market Prices	
Ethanol Price	$1.80/gallon
DDGS Price	$100/ton
Electricity Sale Price	$0.06/kWh
Sale Price of Ash	$200/ton
CO2 Price Per Liquid Unit	$8/ton
Low-Carbon Premium	20¢/gallon
Government Subsidies	
Federal Small Producer Credit	$0.10
RFS Ethanol Tradable Credit	$0.10
Federal Renewable Electricity Credit	$0.019/kWh
Feedstock Delivered Price Paid by Processor	
Corn Price	$3.50/bushel
Energy Prices	
Natural Gas	$8/decatherm
Stover Delivered to Plant	$80/ton
Electricity Price	$0.06/kWh
Propane Price	$1.10/gallon
Operating Costs -- Input Prices	
Denaturant Price Per Gallon	$1.80/gallon
Denaturant Rate (Volume Units Per 100 of Anhydrous)	5
Ethanol Yield (Anhydrous)	2.75 gallon/bushel

expenses per year in the 50 million gallon plants, whether powered by natural gas or biomass, with these figures doubled in the case of 100 million gallon nameplate plants. We apply the assumption that management and quality control costs represent one third of labor costs for large and small plants (Nicola, 2005).

Maintenance expenses of biomass plants were established by starting with the costs per gallon of ethanol produced in a natural gas-fired plant (Shapouri and Gallagher, 2005) and then determining maintenance costs of the biomass technology bundles in proportion to the capital costs of each biomass bundle. To establish maintenance costs for the 100 million gallon conventional and biomass plants, we applied the scale-up factor for capital costs of 2.0 raised to the .7 exponent (1.62) and multiplied it by the maintenance costs of the corresponding 50 million gallon plant.

Labor expenses of biomass plants were established by starting with the costs per gallon of ethanol produced in a natural gas-fired plant (Shapouri and Gallagher, 2005) and then adding the estimates of additional labor needed in the biomass technology bundles. A 50 million gallon per year nameplate biomass-powered plant producing process heat can be expected to have $184,000 more in labor expense than its natural gas-fired counterpart (Nicola, 2005). We assumed an additional $184,000 increase in labor expense for the 50 million gallon biomass bundles that generate electricity. In the case of labor costs for 100 million gallon plants, we applied the conclusion that the larger plants spend 75% as much per gallon produced as the smaller plants (Kotrba, 2006). Thus, a 100 million gallon natural gas-fired plant can be expected to spend $4,500,000 per year in labor versus $3,000,000 in a 50 million gallon plant. A 100 million gallon per year nameplate biomass plant producing process heat is expected to have $368,000 greater labor expense

than its natural gas-fired counterpart (Nicola, 2005). We assumed an additional $368,000 in labor costs for plants that generate electricity at the 100 million gallon scale are needed.

Economic Model

Biomass fuel/technology combinations along with a conventional natural gas plant are compared in a workbook, with each assigned a specific worksheet. Pro forma budgets are constructed for each combination and a common menu page is established to orchestrate various economic conditions to determine the economic viability of various options. The format of the pro forma budgets used to analyze ethanol plant economic sensitivity was originally developed by Tiffany and Eidman (2003).

The nine biomass fuel technology combinations and the conventional plant are compared on the basis of rates of return using the baseline assumptions for 50 million gallon and 100 million gallon per year capacities. Sensitivities of rates of return to changes in some of the key variables are then evaluated.

Results

Baseline Cases

Rates of return on investment for 50 million gallon per year capacities are shown in Figure 10. At baseline conditions rates of return of biomass plants producing process heat exceed the natural gas-fired plant only in the cases of stover and syrup + stover. Syrup and stover utilization in plants producing CHP also provide a higher rate of return than the natural gas-fired plant. Under baseline assumptions, natural gas-fired plants have higher rates of return than any of the three biomass plants producing CHP plus sales of electricity to the grid. Similar comparisons are shown for the 100 million gallon per year plants in Figure 11.

Sensitivity to Changes in Key Variables

Sensitivities of rates of return to changes in key variables are compared in Tables 6 and 7 for 50 million gallon and 100 million gallon per year plants, respectively. Shaded values indicate higher rates of return for biomass alternatives than for the corresponding conventional plant. Rates of return are higher in magnitude for the larger plants; however, the cases which favor biomass alternatives over conventional plants are the same for both plant sizes in relative terms.

An exogenous rise in natural gas prices from $8 to $12 per decatherm affect conventional ethanol plants with no effects shown on the biomass plants when all plants are at baseline conditions. Shifts to higher natural gas prices from the baseline level, drastically cut the ROR of the conventional plant powered by natural gas, giving all the biomass options higher RORs than the conventional plants at $12 per decatherm and even at $10 per decatherm for both sizes of plants. The natural gas price issue is very sensitive to currently constructed ethanol plants, and despite the higher capital costs to implement the biomass options, higher rates

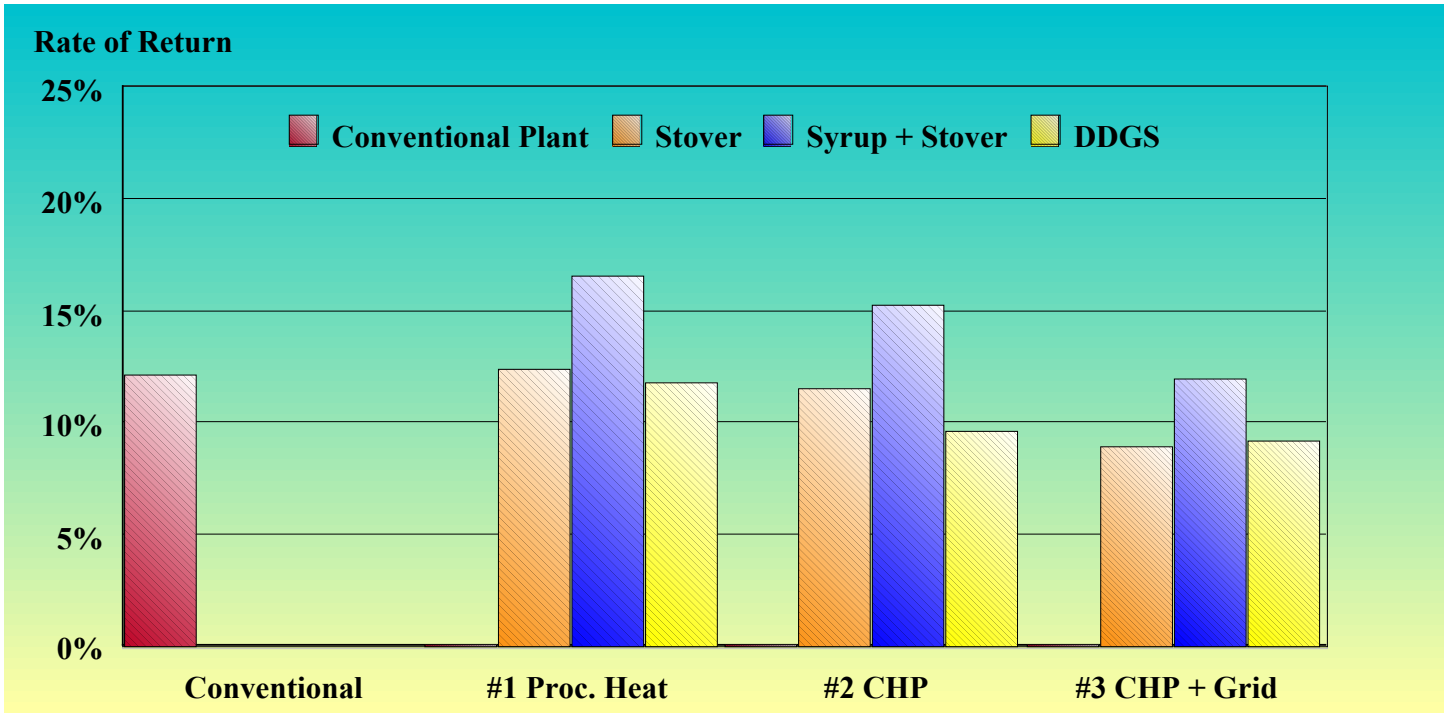

Figure 10. Baseline Rates of Return for 50 Million Gallon Per Year Capacities for the Nine Biomass Fuel/Technology Combinations and the Conventional Plant

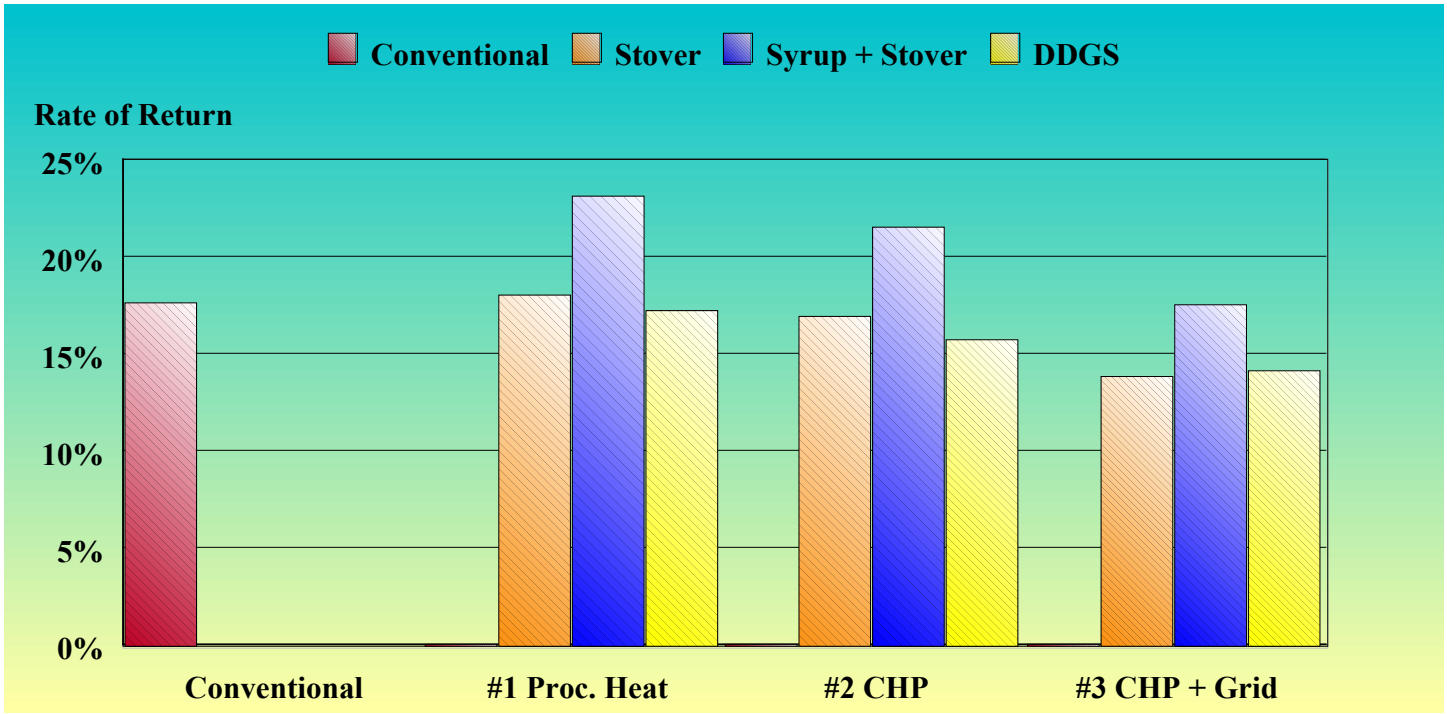

Figure 11. Baseline Rates of Return for 100 Million Gallon Per Year Capacities for the Nine Biomass Fuel/Technology Combinations and the Conventional Plant

of return will be captured by plants utilizing biomass under baseline conditions.

Declines in DDGS prices from $100 to $70 per ton have a more pronounced effect on the conventional plant using natural gas. Plants using stover as fuel have substantial declines as well, for they are producing as much DDGS as the conventional plant. The plants using syrup and stover are less affected and have less DDGS to sell in all cases because the syrup represents 40% of the dry matter in DDGS. The plants combusting DDGS have the least effect with the drop in DDGS price; and in the case of level #3 (CHP plus sales of electricity to the grid), no effect is noted because all of the DDGS are combusted.

Higher ethanol prices would remove much of the economic attraction for designing and building ethanol plants capable of using biomass. Higher ethanol prices experienced when moving from the price of $1.80/gallon at baseline to $2.00/gallon result in a favorable rate of return on investment in the case of the conventional plant. The shift to lower ethanol prices is similar to conditions experienced by plants in the second half of 2007, with ethanol prices dropping from the baseline level of $1.80/gallon to $1.60/gallon. With this exogenous shift, the biomass-powered plants' rates of returns were trimmed much less than the conventional plants' rate of return.

Changes in the premium price for ethanol produced with a low carbon footprint can have substantial impact on the rates of return of the biomass-powered plants. If the price premium increases from $.20 to $.40 per gallon, the biomass-powered plants at all fuel/technology combinations are favored over conventional ethanol plants. If the price premium is zero instead of the $.20 per gallon assumed in the baseline, the RORs of the biomass-powered plants are trimmed and are less than those of the conventional plants, which are unaffected.

In instances where electricity can be sold at a favorable price of 10¢/kWh versus 6¢/kWh, the CHP plus grid cases experience higher rates of return. This would reflect a situation of a utility making a strong response to a state mandate for renewable energy. Such a shift, with other levels at baseline, results in a higher rate of return for the CHP + Grid option for the Stover + Syrup bundle versus the conventional natural gas-fired plant.

A rise in corn price from the $3.50/bushel baseline to $4.00/bushel reduces the rates of return of all the plants. However, it is interesting to note that the biomass-powered plants possess a degree of economic resiliency due to their control of the second highest operating cost of natural gas and the premiums they would receive for producing low carbon fuel versus the conventional plant in this shift from baseline levels. Despite higher capital costs than the conventional plants, biomass plants offer greater stability in their RORs and may be positioned to achieve more success in the face of corn prices substantially above the baseline of $3.50 per bushel.

Table 6. Sensitivity on the Rates of Return to Changes in Key Economic Parameters for 50 Million Gallons Per Year Plants[a]

Case Number and Description of Sensitivity Analysis	Conventional Plant	Biomass Process Heat: Corn Stover	Biomass Process Heat: Stover & Syrup	Biomass Process Heat: DDGS
1. Baseline Case	12.1%	12.4%	16.6%	11.8%
2. Natural Gas: $8 to $12/decatherm	5.0%	12.4%	16.6%	11.8%
3. DDGS: $100 to $70/ton	7.1%	9.0%	14.0%	10.7%
4. DDGS: $100 to $130/ton	17.1%	15.8%	19.1%	12.8%
5. Ethanol: $1.80 to $2.00/gallon	22.8%	19.6%	24.3%	19.2%
6. Ethanol: $1.80 to $1.60/gallon	1.5%	5.2%	8.8%	4.4%
7. Low carbon premium: 20¢ to 40¢/gallon	12.1%	18.6%	23.2%	18.2%
8. Low carbon premium: 20¢ to 0¢/gallon	12.1%	6.2%	9.9%	5.4%
9. Electricity sale price: 6¢ to 10¢/kWh	12.1%	12.4%	16.6%	11.8%
10. Corn price: $3.50 to $4.00/bu	2.9%	6.2%	9.8%	5.3%
11. Corn stover price: $80 to $100/ton	12.1%	10.5%	15.8%	11.8%
12. Corn stover price: $80 to $60/ton	12.1%	14.3%	17.3%	11.8%
13. Natural gas: $8 to $12/dekatherm and DDGS: $100 to $70/ton	0%	9.0%	14.0%	10.7%
		Biomass CHP		
1. Baseline Case	12.1%	11.5%	15.2%	9.6%
2. Natural Gas: $8 to $12/decatherm	5.0%	11.5%	15.2%	9.6%
3. DDGS: $100 to $70/ton	7.1%	8.5%	12.9%	9.0%
4. DDGS: $100 to $130/ton	17.1%	14.6%	17.6%	10.3%
5. Ethanol: $1.80 to $2.00/gallon	22.8%	18.0%	22.3%	16.4%
6. Ethanol: $1.80 to $1.60/gallon	1.5%	5.0%	8.2%	2.8%
7. Low carbon premium: 20¢ to 40¢/gallon	12.1%	17.7%	21.9%	16.1%
8. Low carbon premium: 20¢ to 0¢/gallon	12.1%	5.3%	8.5%	3.1%
9. Electricity sale price: 6¢ to 10¢/kWh	12.1%	11.6%	15.2%	9.8%
10. Corn price: $3.50 to $4.00/bu	2.9%	5.9%	9.1%	3.7%
11. Corn stover price: $80 to $100/ton	12.1%	9.6%	14.3%	9.6%
12. Corn stover price: $80 to $60/ton	12.1%	13.5%	16.1%	9.6%
13. Natural gas: $8 to $12/dekatherm and DDGS: $100 to $70/ton	0%	8.5%	12.9%	9.0%
		Biomass CHP + Grid		
1. Baseline Case	12.1%	8.9%	12.0%	9.2%
2. Natural Gas: $8 to $12/decatherm	5.0%	8.9%	12.0%	9.2%
3. DDGS: $100 to $70/ton	7.1%	6.2%	9.9%	9.2%
4. DDGS: $100 to $130/ton	17.1%	11.7%	14.0%	9.2%
5. Ethanol: $1.80 to $2.00/gallon	22.8%	14.8%	18.3%	15.4%
6. Ethanol: $1.80 to $1.60/gallon	1.5%	3.1%	5.7%	3.0%
7. Low carbon premium: 20¢ to 40¢/gallon	12.1%	14.5%	18.0%	15.1%
8. Low carbon premium: 20¢ to 0¢/gallon	12.1%	3.3%	5.9%	3.3%
9. Electricity sale price: 6¢ to 10¢/kWh	12.1%	10.1%	13.2%	10.4%
10. Corn price: $3.50 to $4.00/bu	2.9%	3.8%	6.5%	3.8%
11. Corn stover price: $80 to $100/ton	12.1%	6.5%	10.3%	9.2%
12. Corn stover price: $80 to $60/ton	12.1%	11.4%	13.6%	9.2%
13. Natural gas: $8 to $12/dekatherm and DDGS: $100 to $70/ton	0%	6.2%	9.9%	9.2%

[a] Darker shaded values indicate higher rates of return for biomass alternative than for corresponding conventional plan

Table 7. Sensitivity of Rates of Return to Changes in Key Economic Parameters for 100 Million Gallons Per Year Plants[a]

Economic Parameters	Conventional Plant	Biomass Process Heat: Corn Stover	Biomass Process Heat: Stover & Syrup	Biomass Process Heat: DDGS
1. Baseline Case	17.6%	18.0%	23.1%	17.2%
2. Natural Gas: $8 to $12/decatherm	8.8%	18.0%	23.1%	17.2%
3. DDGS: $100 to $70/ton	11.4%	13.9%	19.9%	15.9%
4. DDGS: $100 to $130/ton	23.7%	22.2%	26.3%	18.5%
5. Ethanol: $1.80 to $2.00/gallon	30.7%	26.9%	32.7%	26.4%
6. Ethanol: $1.80 to $1.60/gallon	4.4%	9.1%	13.5%	8.1%
7. Low carbon premium: 20¢ to 40¢/gallon	17.6%	25.6%	31.3%	25.1%
8. Low carbon premium: 20¢ to 0¢/gallon	17.6%	10.4%	14.9%	9.4%
9. Electricity sale price: 6¢ to 10¢/kWh	17.6%	18.0%	23.1%	17.2%
10. Corn price: $3.50 to $4.00/bu	6.2%	10.3%	14.8%	9.3%
11. Corn stover price: $80 to $100/ton	17.6%	15.7%	22.2%	17.2%
12. Corn stover price: $80 to $60/ton	17.6%	20.4%	24.0%	17.2%
13. Natural gas: $8 to $12/dekatherm and DDGS: $100 to $70/ton	2.6%	13.9%	19.9%	15.9%
		Biomass CHP		
1. Baseline Case	17.6%	16.9%	21.5%	15.7%
2. Natural Gas: $8 to $12/decatherm	8.8%	16.9%	21.5%	15.7%
3. DDGS: $100 to $70/ton	11.4%	13.2%	18.6%	14.9%
4. DDGS: $100 to $130/ton	23.7%	20.7%	24.4%	16.4%
5. Ethanol: $1.80 to $2.00/gallon	30.7%	25.0%	30.1%	24.0%
6. Ethanol: $1.80 to $1.60/gallon	4.4%	8.9%	12.8%	7.3%
7. Low carbon premium: 20¢ to 40¢/gallon	17.6%	24.6%	29.7%	23.6%
8. Low carbon premium: 20¢ to 0¢/gallon	17.6%	9.3%	13.2%	7.7%
9. Electricity sale price: 6¢ to 10¢/kWh	17.6%	17.1%	21.5%	15.9%
10. Corn price: $3.50 to $4.00/bu	6.2%	10.0%	14.0%	8.4%
11. Corn stover price: $80 to $100/ton	17.6%	14.5%	20.4%	15.7%
12. Corn stover price: $80 to $60/ton	17.6%	19.4%	22.6%	15.7%
13. Natural gas: $8 to $12/dekatherm and DDGS: $100 to $70/ton	2.6%	13.2%	18.6%	14.9%
		Biomass CHP + Grid		
1. Baseline Case	17.6%	13.8%	17.5%	14.1%
2. Natural Gas: $8 to $12/decatherm	8.8%	13.8%	17.5%	14.1%
3. DDGS: $100 to $70/ton	11.4%	10.4%	14.9%	14.1%
4. DDGS: $100 to $130/ton	23.7%	17.2%	20.1%	14.1%
5. Ethanol: $1.80 to $2.00/gallon	30.7%	21.0%	25.3%	21.7%
6. Ethanol: $1.80 to $1.60/gallon	4.4%	6.6%	9.7%	6.5%
7. Low carbon premium: 20¢ to 40¢/gallon	17.6%	20.7%	24.9%	21.4%
8. Low carbon premium: 20¢ to 0¢/gallon	17.6%	6.9%	10.1%	6.8%
9. Electricity sale price: 6¢ to 10¢/kWh	17.6%	15.3%	19.1%	15.6%
10. Corn price: $3.50 to $4.00/bu	6.2%	7.5%	10.8%	7.5%
11. Corn stover price: $80 to $100/ton	17.6%	10.8%	15.5%	14.1%
12. Corn stover price: $80 to $60/ton	17.6%	16.8%	19.5%	14.1%
13. Natural gas: $8 to $12/dekatherm and DDGS: $100 to $70/ton	2.6%	10.4%	14.9%	14.1%

[a]Darker shaded values indicate higher rates of return for biomass alternative than for corresponding conventional plan

A shift to higher stover prices from $80 to $100 per ton results in minor shifts in the RORs of the options that use stover and no effect on the plants that use DDGS as a fuel. In any case, process heat and CHP applications still maintain higher rates of return than the conventional plant in the case of the syrup plus corn stover fuel. These results offer some assurance that additional expenses that may be required to densify and process corn stover can be economically justified by plants using corn stover. However, if corn stover is available as cheap as $60 per ton, then three additional biomass options exceed the natural gas fired plant, including the stover + syrup option producing CHP and electricity for the grid.

Case 13 in Tables 6 and 7 shows the effects of two exogenous factors on RORs of the competing technology bundles. If the price of DDGS drops from baseline of $100 to $70 per ton and natural gas rises from baseline at $8 to $12 per decatherm, the ROR of a conventional plant is reduced to zero for the 50 million gallon per year case, while all the plants using biomass would be producing reasonably favorable rates of return. Although, all rates of return are higher for the larger plants, biomass alternatives produce much higher RORs than the natural gas-fired plant under these assumptions.

Conclusions

Various technology bundles of equipment, fuels and operating activities were modeled and found capable of supplying energy and satisfying emissions requirements for dry-grind ethanol plants of 50 and 100 million gallons per year capacity using corn stover, distillers dried grains and solubles (DDGS), or a mixture of corn stover and "syrup" (the solubles portion of DDGS). From these specifications, capital and operating costs for plants using biomass fuels were estimated. Although plants using biomass have higher capital costs, they offer increased economic resiliency to changes in some of the key operating variables. Results show favorable rates of return for biomass alternatives compared to conventional plants using natural gas and purchased electricity over a range of conditions. The mixture of corn stover and syrup provided the highest rates of return in general. Factors favoring biomass-fired plants include higher premiums for low carbon footprint ethanol, higher natural gas prices, lower DDGS prices, lower ethanol prices, and higher corn prices. The ramifications of Low Carbon Fuel Standards and policies to encourage electricity generated from biomass will have strong influences on the decisions of ethanol plants to utilize the biomass that is readily available at or near ethanol plants. This analysis identifies the potential to greatly improve the carbon footprint of ethanol produced from corn starch with processes and methods that are available today. In addition, dry-grind ethanol plants can produce substantial amounts of reliable, renewable electricity in excess of their needs while utilizing locally available biomass to reduce the carbon footprint of the fuel they produce.

References

Cooper, G. 2006. "A Brief, Encouraging Look at 'Theoretical' Distillers Grains Markets." *Distillers Grains Quarterly*, 1st Quarter 2006 Issue. Available at http://www.distillersgrainsquarterly.com/article.jsp?article_id=1176&q=cooper.

De Kam, M., V. Morey, and D. Tiffany. 2007. "Integrating Biomass to Produce Heat and Power at Ethanol Plants." Paper presented at the American Society of Agricultural and Biological Engineers (ASABE), Paper Number 076232, Minneapolis, Minnesota, June 17-20. Available at http://www.biomasschpethanol.umn.edu/papers/ASABE_076232-8-8-07.pdf.

Eidman, V. 2007. "Ethanol Economics of Dry Mill Plants." In *Corn-Based Ethanol in Illinois and the U.S.: A Report from the Department of Agricultural and Consumer Economics, University of Illinois*. Farmdoc, University of Illinois, Policy. Available at http://www.farmdoc.uiuc.edu/policy/research_reports/ethanol_report/Ethanol%20Report%20-%20Ch%203.pdf.

Kotrba, R. 2006. "Larger Scale, Relative Economics." *Ethanol Producer Magazine*, May 2006 Issue. Available at http://www.ethanolproducer.com/article.jsp?article_id=2004&q=&page=all.

Kwiatowski, J., A. McAloon, F. Taylor, and D. Johnston. 2006. "Modeling the Process and Costs of Fuel Ethanol Production by the Corn Dry-Grind Process." *Industrial Crops and Products* 23(May):288-296.

Lewandowski, D. 2000. *Design of Thermal Oxidation Systems for Volatile Organic Compounds*. Boca Raton, Florida.: CRC Press LLC.

McAloon, A., F. Taylor, and W. Yee. 2004. "A Model of the Production of Ethanol by the Dry Grind Process." *Corn Utilization & Technology Conference Proceedings*, Indianapolis, IN, June 7-9, Poster 58.

McAloon, A., F. Taylor, W. Yee, K. Ibsen, and R. Wooly. 2000. "Determining the Cost of Producing Ethanol from Corn Starch and Lignocellulosic Feedstocks." Golden, Colorado: U.S. Department of Agriculture and U.S. Department of Energy Joint Study, NREL/TP-580-28893. Available at http://www.nrel.gov/docs/fy01osti/28893.pdf.

Morey, V., D. Hatfield, R. Sears, and D. Tiffany. 2006. "Characterization of Feed Streams and Emissions from Biomass Gasification/Combustion at Fuel Ethanol Plants." Paper Presented at American Society of Agricultural and Biological Engineers (ASABE), Paper No. 064180, Portland, Oregon, July 9-12. Available at http://www.biomasschpethanol.umn.edu/papers/ASABEPaper064180.pdf.

Morey, V., D. Tiffany, and D. Hatfield. 2006. "Biomass for Electricity and Process Heat at Ethanol Plants." *Applied Engineering in Agriculture* 22(September):723-728.

Nicola, D. "Economics of Scale in Ethanol Production under Different Fuel Technologies." Masters of Science Paper, Department of Applied Economics, University of Minnesota, St. Paul, December 2005.

Petrolia, D. 2006. "The Economics of Harvesting and Transporting Corn Stover for Conversion to Fuel Ethanol: A Case Study for Minnesota." Staff Paper Series P06-12, Department of Applied Economics, University of Minnesota. Available at http://ageconsearch.umn.edu/bitstream/14213/1/p06-12.pdf.

Renewable Fuels Association. 2007. "U.S. Fuel Ethanol Industry Biorefineries and Production Capacity." *Ethanol Biorefinery Locations*. Available at http://www.ethanolrfa.org/industry/locations/.

Shapouri, H., and P. Gallagher. 2005. USDA's 2002 Ethanol Cost-of-Production Survey. Washington, DC: U.S. Department of Agriculture, Office of the Chief Economist, Agricultural Economic Report 841, July. Available at http://www.usda.gov/oce/reports/energy/USDA_2002_ETHANOL.pdf.

Shapouri, H., J. Duffield, and M. Wang. 2002. *The Energy Balance of Corn Ethanol: An Update*. Washington, DC: U.S. Department of Agriculture, Office of

the Chief Economist, Agricultural Economic Report 813, July. Available at http://www.transportation.anl.gov/pdfs/AF/265.pdf.

Sokhansanj, S. and A. Turhollow. 2004. "Biomass Densification – Cubing Operations and Costs for Corn Stover." *Applied Engineering in Agriculture* 20(July):495-499.

Tiffany, D. and V. Eidman. 2003. "Factors Associated with Success of Fuel Ethanol Producers." Staff Paper Series P03-7, Department of Applied Economics, University of Minnesota, August. Available at http://www.agmrc.org/NR/rdonlyres/CB852EC6-0DB7-4405-944F-59888DD6D344/0/ethanolsuccessfactors.pdf.

Tiffany, D., R. Morey, and M. De Kam. 2007. "Economics of Biomass Gasification/Combustion at Fuel Ethanol Plants." Paper Presented at American Society of Agricultural and Biological Engineers (ASABE), Paper Number 076233, Minneapolis, Minnesota, June 17-20. Available at http://www.biomasschpethanol.umn.edu/papers/ASABE_076233.pdf.

U.S. Department of Agriculture, Economic Research Service. 2007. *Feed Grains Database: Yearbook Tables*. "Table 16--Byproduct feeds: Average wholesale price per ton, bulk, specified markets" Available at http://www.ers.usda.gov/Data/FeedGrains/StandardReports/YBtable16.htm.

U.S. Department of Energy, Energy Information Administration. "Natural Gas Prices." Available at http://tonto.eia.doe.gov/dnav/ng/ng_pri_sum_dcu_SIA_m.htm. December 30, 2007.

U.S. Environmental Protection Agency. 2006. "Prevention of Significant Deterioration, Nonattainment New Source Review, and Title V: Treatment of Corn Milling Facilities Under the "Major Emitting Facility" Definition." *Federal Register Environmental Documents*. Proposed Rule, Docket ID Number EPA-HQ-OAR-2006-0089. Federal Register: March 9, Volume 71, Number 46. Available at http://www.epa.gov/EPA-AIR/2006/March/Day-09/a2148.htm.

Wang, M., M. Wu and H. Huo. 2007. "Life-Cycle Energy and Greenhouse Gas Emission Impacts of Different Corn Ethanol Plant Types." *Environmental Research Letters* 2(April-June):024001(13pp).