AgEcon SEARCH
RESEARCH IN AGRICULTURAL & APPLIED ECONOMICS

The World's Largest Open Access Agricultural & Applied Economics Digital Library

This document is discoverable and free to researchers across the globe due to the work of AgEcon Search.

Help ensure our sustainability.

Give to AgEcon Search

AgEcon Search
http://ageconsearch.umn.edu
aesearch@umn.edu

*Papers downloaded from **AgEcon Search** may be used for non-commercial purposes and personal study only. No other use, including posting to another Internet site, is permitted without permission from the copyright owner (not AgEcon Search), or as allowed under the provisions of Fair Use, U.S. Copyright Act, Title 17 U.S.C.*

No endorsement of AgEcon Search or its fundraising activities by the author(s) of the following work or their employer(s) is intended or implied.

REFORMING THE CAP: AN AGENDA FOR REGIONAL GROWTH?

Roberto Esposti

Department of Economics – Università Politecnica delle Marche
phone: +39 071 2207119, e-mail: r.esposti@univpm.it, website: www.dea.unian.it/esposti

European Association of Agricultural Economists

Università degli Studi della Tuscia

Istituto nazionale di Economia Agraria

Rete di informazione della Commissione Europea

Paper prepared for the 109th EAAE Seminar " THE CAP AFTER THE FISCHLER REFORM: NATIONAL IMPLEMENTATIONS, IMPACT ASSESSMENT AND THE AGENDA FOR FUTURE REFORMS".

Viterbo, Italy, November 20-21st, 2008.

Reforming the CAP: an agenda for regional growth?

Roberto Esposti

Abstract

This paper aims at analysing the recent CAP reform from the perspective of the current general and strategic objectives of the EU as defined by the Lisbon Strategy. A critical appraisal of the CAP impact in terms of regional growth is carried out. Firstly from a strictly conceptual and methodological point of view, then by analysing more in detail how CAP reform (of both Pillar I and II) might have actually affected the role of the CAP in promoting (or hindering) regional growth and, therefore, convergence. Empirical evidence provided by the different available methodologies has progressively emerged in the very last years. Though a conclusive answer on the impact of the reform can not be drawn, it still emerges that the role of CAP design and implementation in affecting regional growth and convergence is usually underestimated and often neglected in the discussions about the future of the CAP. At the same time, however, this role is not univocal and strongly case-specific, as it substantially differs across regions according to their socio-economic structure and how reforms are jointly implemented.

Keywords: Common Agricultural Policy, Regional Growth and Convergence, Lisbon Strategy
EconLit Classification: Q180, R110, O410

CONTENTS

1. Introduction: scope and limits of the paper 2
2. CAP, Lisbon and cohesion: a non-sectoral perspective 4
3. Main conceptual issues 8
   3.1. The appropriate theoretical framework 8
   3.2. Policies, growth and convergence: making the (new) CAP work for Lisbon? 9
   3.3. Multiregional and multisectoral models 16
4. Evidence 22
   4.1. The distributional argument 23
   4.2. The counter-treatment hypothesis 26
   4.3. Multisectoral models: empirical evidence and limits 29
5. Some concluding remarks: Does the CAP reform work for regional growth? 33
References 37
Appendix 44

1. Introduction: scope and limits of the paper

Within the impressive amount of literature produced in the last years about the recent CAP reform and its impact,[1] we may found a relatively small number of contributions focusing on whether the current CAP is consistent with the alleged priorities and strategic objectives of the EU and, consequently, positively interacts with other EU policies in achieving these objectives (Kuokkanen and Vihinen, 2006, p. 18; Hall et al., 2001; European Commission, 2007a, p. 157). The CAP being a strictly sectoral policy (at least its Pillar I), most studies actually focus on the sectoral implications of the changes progressively introduced in its design and implementation. Nonetheless, as it still remains the most important EU policy (at least till 2007, in financial terms), such evaluation can not elude the fundamental concern on how this policy coordinates with other EU interventions to achieve the overall declared EU long-term objectives. An extensive research work has been carried out to evaluate the growth impact of structural policies (Bradley et al., 2003; Dall'erba and De Groot, 2006; European Commission, 2007a; Esposti, 2008); therefore, it seems fully legitimate to investigate such impact for the CAP as well.

The 2003-2005 reform (that is, the 2003 Fischler Reform of Pillar I and the 2005 Reform of Pillar II, the Rural Development Policy, or RDP) (Reg. 1782/2003 and Reg. 1698/2005, respectively), has been discussed, designed and approved in the context of a substantially redesigned long-term EU strategy, as defined at the Lisbon European Council in 2000 (the Lisbon Strategy or Agenda) and its successive reformulations. On request of the EU Commission itself, in 2002, a critical review of EU policies and instruments with respect to the Lisbon objectives (and, in particular, a faster knowledge-based growth) was carried out by a group of independent experts led by André Sapir. The consequent report (Sapir et al., 2003) inspired many other analyses on the appropriateness of the current major EU policies and on the need of substantial reforms.

The main purpose of this paper is to critically analyse the recent CAP reform from the perspective of the strategic objectives of the EU as defined by the Lisbon (and Gothenburg) Agenda. The attention is on the capacity of the CAP to generate economy-wide structural effects and stimulate regional growth. In pursing this objective, the starting point is the Sapir Report itself and its general, and generic, conclusion (Sapir et al., 2003, p. 166): the current CAP is inconsistent with the growth and cohesion objectives of the EU and, given its budgetary relevance, it actually represents a major obstacle to re-direct funds towards such overall objectives (Esposti, 2006).

Not necessarily agreeing with this conclusion, the present paper shares with the Sapir Report the emphasis on overall EU growth and cohesion (here mainly intended as growth convergence) and looks at the CAP in this perspective. The title itself patently and voluntarily evokes the Sapir Report ("An agenda for a growing Europe") but with four major differences. Firstly, the paper specifically deals with the CAP only, and not the EU as a whole, all its policies, rules and institutions. Secondly, emphasis here is on regional growth, therefore not just on growth performance of the Union as an

[1] This huge research work on the CAP reform is well exemplified by the proceedings of two recent EAAE Seminars, held in Parma (the 87th) (Arfini, 2005) and in Seville (the 107th), as well as by the last EAAE Congress, in Ghent.

aggregate, but of all its territories: growth and cohesion will be considered together, as two faces of the same coin.

A third, and more important difference, is simply represented by the question mark in the title. While the Sapir Report shows, to a large extent, a *normative approach* to EU policies, here the perspective on CAP and its reform is merely positive. The objective is not to suggest how the CAP should be to better suit the EU growth and cohesion objectives. This paper just tries to answer a positive question: what contribution does the (reformed) CAP give to regional growth and cohesion? This *positive approach* makes the forth difference also emerge: the agenda, here, is not for policy makers but for agricultural economists. It analyses what we know and what we still ignore about the contribution of CAP to regional growth and cohesion.

According to these overall objectives, the paper is structured as follows. Section 2 critically reviews how the overall EU strategic objectives as defined by the Lisbon (and Gothenburg) Agenda entered and affected the discussion on the 2003-2005 CAP reform. Section 3 deals with the major topic of the paper, namely, how the reformed CAP is expected to contribute to regional growth and cohesion. This is done by overviewing the basic conceptual and methodological issues when looking at the CAP from this non-sectoral perspective and then, how the CAP pillars, measures and financial flows can be re-assembled according to this contribution to regional growth. The section closes with an overview of the methodological approaches that have been proposed to empirically analyse the contribution of the CAP along this conceptual framework.

Section 4 aims at providing the empirical evidence tentatively answering the basic questions about the contribution of the CAP to regional growth and cohesion. The section starts with evidence provided by the prevailing perspective in empirical analysis so far. It is the so-called *distributional argument* and it focuses on the distribution of CAP funds across EU regions but, at the same time, is not much informative and even misleading or confusing, on the real growth processes the CAP interferes with. Then, a different perspective is proposed (the *counter-treatment hypothesis*) emphasizing how an almost opposite effect, with respect to the merely distributional conjectures, can be attributed to the CAP within the multisectoral mechanisms of regional economic growth. Finally, it discusses the evidence provided by mostly recent empirical literature on CAP reform and on their possible effects on regional economies, in this respect, also trying to draw some implications for the upcoming further reforms (Buckwell, 2008; Dutch Ministry of Agriculture, Nature and Food Quality, 2008).

Section 5 concludes by emphasizing those critical points, from data availability to theoretical and methodological issues, agricultural economists are expected to cope with in future research on this topic.

2. CAP, Lisbon and cohesion: a non-sectoral perspective

The Sapir Report approaches the CAP in a singular way. Over almost two hundred pages of very detailed analysis of EU policies and institutions, the CAP is practically neglected. Notwithstanding its major share on the EU budget, the report only marginally mentions the CAP and those critical issues that were under discussion in that period for the upcoming Fischler Reform. In one of the last pages, however, in making recommendations on the revision of the budget and funding mechanisms according to the alleged EU strategic objectives, the report concludes as follows: "*the CAP does not seem consistent with the Lisbon goals, in the sense that its value-for-money contribution to EU growth and convergence is lower than what is targeted for most other policies. Continuing to fund the CAP at present levels would amount to discounting its reduced contribution to the Lisbon goals compared with potentially much greater contributions from the other growth-enhancing policies*" (Sapir et al., 2003, p. 166).

It is worth noticing that the Sapir group began its work in 2002, when the discussion on the CAP reform (formerly known as Mid-Term Review, MTR) was just starting, and the report was published in July 2003, that is, one month later the EU Council adopted the Fischler Reform. Though the Sapir Report apparently gives a positive evaluation on the direction taken by that CAP reform (Sapir et al., 2003, p. 19), traces of this fundamental criticism on CAP consistency can be hardly found during the discussion that eventually led to the approval of the Fischler Reform. This discussion actually treated the CAP as a strictly agricultural affair and, at least apparently, neglected the Lisbon Strategy and the role of CAP in growth and cohesion.

In 2005, the European Commission (EC) firmly relaunched the Lisbon Strategy putting even more emphasis on the "*need for higher economic growth*" (namely, increasing competiveness, labour productivity and job creation) (European Commission, 2005a, p. 1; 2005b). As a consequence, any EU policy had to be redirected towards this urgent need: "*to achieve these objectives, the Union must mobilise to a greater degree all appropriate national and Community resources*" (European Commission, 2007a, p. xiv). Not surprisingly, the argument of the inconsistency of the CAP was raised again by a group of countries led by UK and Prime Minister Tony Blair. They argued that a stronger action of the EU in favour of its strategic objectives and, therefore, a larger EU budget would be only accepted under a substantial reduction of the CAP share in favour of structural policies (Esposti, 2006).

The EU Commission itself, in its cohesion reports (European Commission, 2001a, 2004a, 2007a), wonders whether the CAP has given any sort of positive contribution to improve cohesion across EU territories. In particular, the latter report (European Commission, 2007a), with the reformed CAP (both pillars) already entered in force, still states that "*the negotiation on the budget of the Union for the period 2007-2013 has demonstrated the need for reinforced coherence and complementarity between the different elements of the Union intervention*" (European Commission, 2007a, p. 157), and acknowledges that that the major characteristic of at least part of the CAP remains to be "*not designed for cohesion purposes*" (European Commission, 2007a, p. 167).

The alleged small contribution of the CAP to regional growth and cohesion, therefore, remains a substantial argument against the CAP even after its more recent reform. This may also explain why, when in 2005 the reform of Pillar II was approved and, almost contemporaneously, the debate on the EU budget for 2007-2013 programming period became particularly hot, DG Agriculture firmly emphasized that the CAP have been redesigned to *make it work for Lisbon* (European Commission, 2005a, section 3). This ambition of the new CAP would not be only limited to the contribution to environmental sustainability according to the extension of the Lisbon Strategy made at 2001 EU Council in Gothenburg (the Lisbon-Gothenburg Strategy). Besides this key aspect, in fact, the alleged contribution of the new CAP would concern regional growth and cohesion itself: "*in the agricultural sector, and in rural areas, the EU is pursuing balanced economic growth and technological improvement and the creation of new jobs*" (European Commission, 2005a, p. 4). In article 5 of Reg. 1698/2005, it is clearly stated the RDP has to be coherent with the objectives of other funds (thus, competitiveness and cohesion). As a consequence, the evaluation itself of RD programmes should assess their contribution to Community priorities: growth, job creation and labour productivity should be considered as prime indicators in such assessment (Mantino, 2006; Felici et al., 2008; Marenco, 2008, p. 57).

In this perspective, both pillars are expected to provide a significant contribution: "*a market-oriented CAP and a growth-oriented and innovative rural policy are central elements*" (European Commission, 2005a, p. 4). Defending the CAP as a policy that "*will continue to make a concrete contribution to more growth and jobs in the future*" (European Commission, 2005a, p. 4) is especially based on the new "strategic" approach underlying the reformed RDP: "*a more strategic approach has been introduced into the policy with a strong focus on the integration of major policy priorities as spelt out in the conclusions of the Lisbon and Gothenburg European Councils*" (European Commission, 2007a, p. 169). Therefore, while Lisbon issues were almost neglected during the discussion and negotiation of Pillar I reform in 2003, the reform of Pillar II aims at making rural development "*central to the Lisbon process*". Though maintaining its character of a wide set of small-scale local interventions, the new strategic orientation of Pillar II should be "*put in place to connect rural communities with major investments under regional and cohesion policies*" (European Commission, 2005a, p. 2) and "*to help meet the Lisbon Strategy's aims*" (European Commission, 2005a, p. 3). The DG Agriculture itself, in an early mid-term assessment of the 2000-2006 RDP to prepare of the post-2006 policy, acknowledges that while many RD measures had a positive impact at the micro level, it is actually very difficult to demonstrate some positive effect at the aggregate (macro) level, for instance in terms of employment creation (European Commission, 2004b, p. 118).

This attempt to give the reformed CAP a "Lisbon justification", however, has not been fully successful. This is evident in several documents of the EU Commission that, in relaunching the Lisbon Strategy, substantially neglects the role of the CAP. It is the case of the final Report of the

Kok Group (European Communities, 2004)[2] and the consequent communication from President Barroso for a new start for the Lisbon Strategy (European Commission, 2005b)[3].

In these documents, the main concern to reinforce the Lisbon justification of EU policies is on cohesion policy and the need to make it work in the same direction of competitiveness policy rather than interpreting it as of a purely distributional intervention (Sapir et al., 2003, pp. 146-147; Bertoncini, 2007; European Commission, 2007a, pp. 172-175; Lefebvre, 2007). This latter vision is contrasted by those convinced that "*promoting cohesion is not only ethically correct, but economically efficient. Cohesion and competiveness are mutually reinforcing goals*" (Jouen and Rubio, 2007, p. 12)[4]. In particular, emphasis has been put on the so-called *leverage effect* (Jouen, 2007; Spinaci, 2007), that is, the capacity of cohesion policies to activate resources, institutional capacity and knowledge at the territorial level, that eventually also reinforce competitiveness and growth policies.

Such argument supporting the complementarity between competitiveness and cohesion policies, however, is never mentioned in favour of the CAP, even after the recent reform. This is also true for Pillar II for which, at least in principle, this leverage argument could also be valid and perhaps supported by major evidence (Mantino, 2006). After all, this scepticism about the real integration of the CAP with EU objectives and its (structural) policies finds a further sound confirmation in the debate on the HC (Health Check) proposal. The document released by the EC to present it says almost nothing on the contribution to cohesion and overall growth and competiveness; the Lisbon Strategy is never mentioned (European Commission, 2007b).

In their very detailed and insightful analysis on the future of the CAP beyond 2013, Bureau and Mahé emphasize the "*need for coherence (of the CAP) with broader policies*" and the risk of "*incoherence with cohesion policy*". This also suggests that "*a tighter connection between the CAP and cohesion policies is needed so that the various EU budgets complement each other and do not provide conflicting incentives*" (Bureau and Mahé, 2008, pp. 37-38). Their concern, however, brings about only marginal implications on how the CAP should be redesigned, the strictly sectoral issues eventually taking again the first place. Moreover, it seems just an exception within the overall debate on the future of the CAP. The seminar held at the EU Commission on "*the economic context of the HC*", as part of the last EAAE Congress in Ghent, presented and discussed the HC proposal and the future of the CAP in detail and with high-level contributions. At the same time, however, the Lisbon Strategy, the overall coherence of the CAP in this respect and its economy-wide implications were barely mentioned.[5]

---

[2] "*The promotion of growth and employment in Europe is the next great European project*" (p. 44). In this Report the word agriculture appears only once, while "Common Agricultural Policy" never.

[3] In this communication, neither "agriculture" nor "Common Agricultural Policy" are ever mentioned.

[4] "*It is time to restore the truth as regards the EU cohesion policy […] it is not just an instrument of redistribution but also, and above all, a tool to enhance economic and social development*" (Jouen, 2007); as a consequence, cohesion policy is fully Lisbon-related.

[5] Paradoxically, in these documents and discussions on the future of the CAP, Lisbon is actually much more present in reference to the Lisbon Treaty and its recent rejection (Buckwell, 2008). It should be acknowledged, however, that during the abovementioned seminar in Brussels, Frandsen (2008) underlined the need for more research oriented to

The EU Commission recently released an interesting non-technical document aimed at clarifying how most remarks usually raised against the CAP are neither real nor supported by facts anymore (European Commission, 2008). In this list of 10 fundamental criticisms on the CAP, however, no mention is made to its eventual inconsistency with respect to other EU policies and to overall EU strategic objectives; the Lisbon Strategy is never mentioned, as well as its key-words such as "economic growth", "job creation", "knowledge", "productivity", "cohesion", etc..[6]

As well emphasized by Kuokkanen and Vihinen (2006, p. 11), it should be acknowledged that, besides official discourses and the large amount of financial resources, "*the CAP has been only a secondary element in the discussion about the Lisbon Strategy*". At the same time, at least in the perception of most scholars (Kuokkanen and Vihinen, 2006, p. 16), also the Lisbon Strategy has been a secondary element during the last CAP reform and remains such in the discussion about its future. In fact, we can conclude that if an exceptionalism holds for EU agriculture for its "*special role in relation to the state and the market when compared to other economic sectors*" (Skogstad, 1998), such exceptionalism is also valid for the CAP itself (Kuokkanen and Vihinen, 2006)[7]; a policy unrelated, if not incoherent, with other EU policies, that is not expected to contribute to sustainable growth across EU territories, where sustainability also implies, among other aspects, cohesion (growth convergence).

As already mentioned, the aim of the present paper is not to enter this discussion on "how the CAP should be" to achieve consistency with wider EU objectives and other EU policies. The major questions, here, are to assess which kind of knowledge and empirical evidence we actually have on the contribution of CAP to EU growth and cohesion (that is, to what extent the CAP can be considered a Lisbon-related policy), to explain why only a limited number of studies have been produced (Kuokkanen and Vihinen, 2006, p. 11 e 16) and which major methodological problems arise. A sort of exceptionalism also concerns research on the CAP but this seems less justifiable: despite the political debate, it remains a key-research issue to investigate whether, and how, the CAP really contributes to regional growth and to achieve higher cohesion across EU territories and whether, in particular, the 2003-2005 CAP reform really represents a breakthrough in this respect.

---

analyse, understand and improve "*the consistency across EU policies and agriculture contribution to growth and welfare*".

[6] Even in documents prepared to support a more radical vision to relaunch the role of the CAP within the EU this issue is seldom raised. It is the case, for instance, of the documents prepared by the UK government (HM Treasury and Defra, 2005) and the Ducth Ministry (Dutch Ministry of Agriculture, Nature and Food Quality, 2008).

[7] This exceptionalism eventually acknowledges the historical bias of the CAP. After all, even the more radical reforms proposed over time with respect to the original characters of the CAP, as the Siena Memorandum for instance (Barbero et al., 1984), never mentioned a major contribution expected from the CAP in terms of overall EU growth potential and cohesion across regions and countries. Economic and social cohesion was not an explicit objective of the original CAP (although the fair standard of living for the agricultural population was mentioned in the Treaty of Rome) (Tarditi and Zanias 2001; Kuokkanen and Vihinen, 2006, p. 7). Therefore, in CAP history the cohesion issues about the CAP have been mostly related to its redistributional effects between urban and rural areas and across social categories (farmers and non-farmers; large and small farms). At the same time, it should be also reminded that among the three general objectives of the CAP agreed at the 1958 Stresa Conference we also find "to contribute to overall growth by allowing specialisation within the community and eliminating market distortions".

3. Main conceptual issues

3.1. The appropriate theoretical framework

The lack of a well-established research tradition on the CAP contribution to regional growth and cohesion can not only be attributed to the abovementioned exceptionalism. Another major reason is that, as a sectoral policy, the assessment of CAP impacts outside the sectoral boundaries is conceptually and methodologically complex. The presumption that policy design and implementation is fully informative on who receives the support and how uses it, is often false. It may be retained as valid for those policies targeted to very specific and well-defined objectives, recipients and uses.[8] In other cases, as Pillar I of the CAP, the first-level recipient may be explicit, but the actual use and, thus, the very final recipients of this support may be much less clear. More direct and decoupled support, in particular, may generate different outcomes depending on how it is used and transferred to other subjects, sectors and areas.[9] Pillar II measures represent a mixture between support with a clearly identified final use (for instance, contribution to physical investments, R&D, human capital) (Felici et al., 2008; Mantino, 2006) and measures that are actually direct quasi-decoupled payments (for instance, environmental measures that directly compensate the farmers for the loss of production or increase of cost).

Analyses and empirical works mostly based on funds' allocation, and its alleged redistributional consequence, almost entirely miss the point. Funds' allocation is just the first stage of the problem and these studies implicitly assume that allocation of funds across countries, regions, subjects and sectors, also informs on how this support is then re-distributed across these units. This is unfortunately not true, particularly when a change in the policy regime may substantially modify these transfer processes.

Conceptually and methodologically, analysing the contribution of the CAP to growth and cohesion requires models with two basic characters. Firstly, they should admit different possible uses of the same support: a direct decoupled payment can be used by a farmer either to sustain household consumption (or saving) or to fund investments in his own agricultural production. Qualitatively, the outcome in terms of aggregate growth substantially differs due to the different transfers to other subjects who may operate in other sectors or even in other regions. Secondly, as a consequence, models have to be multisectoral and multiregional (i.e., open) to admit these cross-sector and cross-region transfers.[10] Knowing how the support is initially allocated among units (farmers, regions and sectors) is only the first required information. Then, a correct methodology should be able to

[8] This does not mean, however, that such clearly targeted policies are also easily modelled. For instance agro-environmental measures or support to farm diversification are measures that can be entered in conventional model with more difficulties than, for instance, decoupled payments (Balamou et al., 2007). Nonetheless, how this latter support is used within the economy remains less explicit.

[9] "*While relatively few economic actors will be directly affected by agricultural policy changes, many will be indirectly affected through factor and goods market interactions*" (Balamou et al., 2008, p. 1).

[10] "*Their [of conventional policy evaluation methodologies] major limitations are in the assessment of only direct effects on agriculture, excluding indirect and induced effects that, via the circular flow of the regional economy, the supported program could induce. To assess these higher order effects a regional multi-sector model is needed*" (Felici et al., 2008, p. 3).

reconstruct how this support is transferred across units on the base of the real nature of policy implementation (Figure 1). [11]

Figure 1 – Transmission of CAP support across subjects, sectors and regions, and the aggregate growth effect

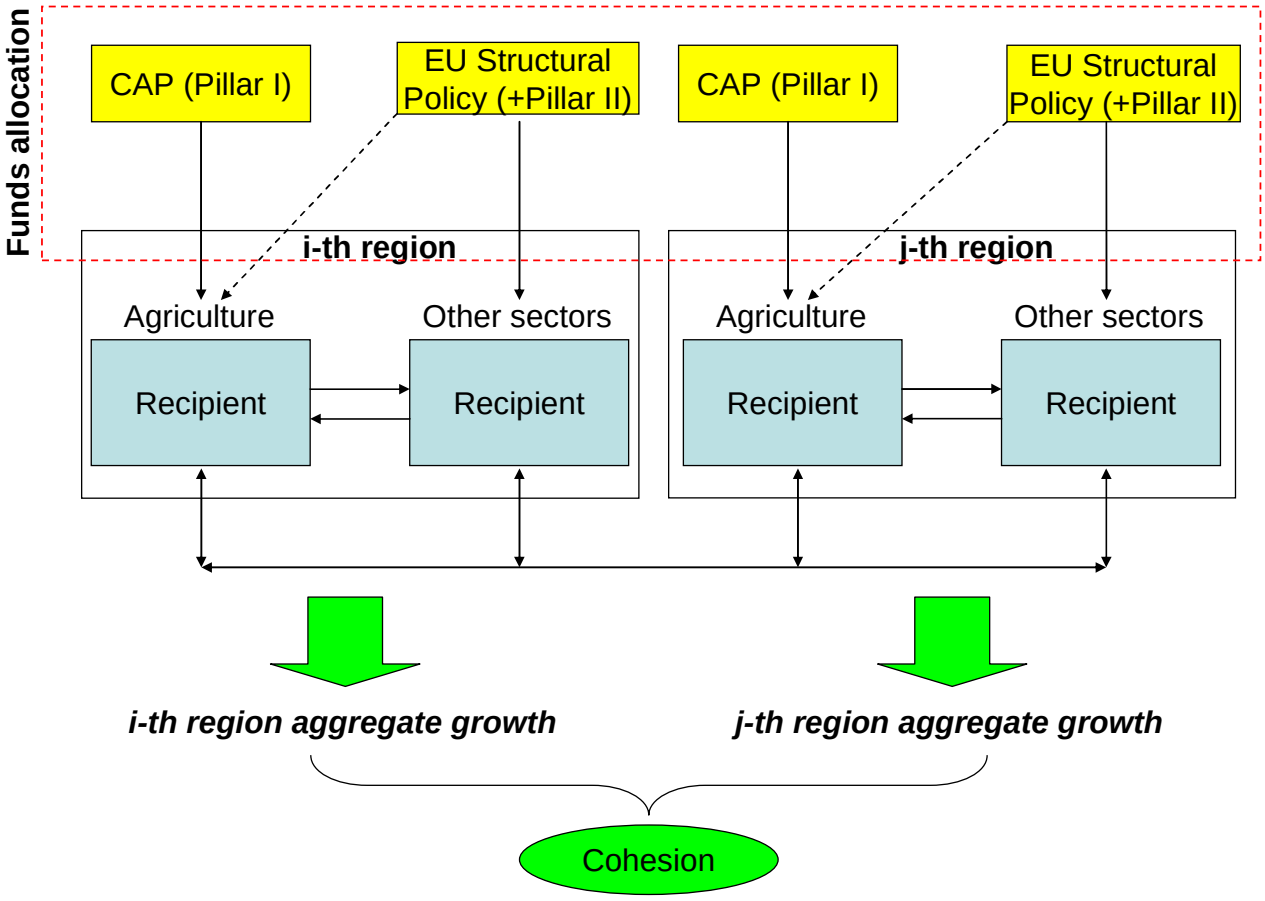

3.2. Policies, growth and convergence: making the (new) CAP work for Lisbon?

Following this representation, once funds' allocation across regions is appropriately computed, in order to analyse the impact of CAP and its reform along it is necessary to allocate funds within the regions, that is, among the different possible uses (Saktiņa, 2007). Unfortunately, we never know how money are really used once they are delivered to the first-level recipient, thus we need to assume some bi-univocal relation between the source of funds and their uses. This is, in fact, the very initial issue to be tackled when analysing the impact of CAP at the economy-wide level (Bonfiglio et al., 2006).

[11] According to an OECD study (OECD, 1995), 1 Euro of direct payment provided by the EU produces 0.75 Euro of farm income; 1 Euro of price support generates only 0.35 Euro of farmer income (European Commission, 2001b). Evidently, the same amount of CAP resources delivered in different forms implies a different transfer of support across subjects and sectors.

Once allocation across uses is established, then funds are transferred over the whole regional economy and to other regions according to its economic structure (presence and relevance of the different sectors and integration among them), the performance (factor productivity) of each sector and the integration with external economies. Eventually, the economy-wide effect (outcome)[12] of the policy under study depends on: the (observable) amount of funds allocated to the region[13], the (unobservable) allocation of funds within the region across different uses and the (modelled) transfer to other sectors and regions. Dynamically and mainly through the tax system, the outcome itself (growth and cohesion, in the present case) can, in turn, affect funds' allocation across and within regions. Such evaluation framework can be thus summarized as a sequence of analytical phases, that is, Source, Use, Transfers and Outcome:

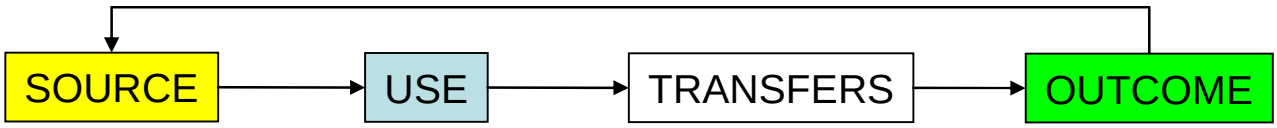

Though in a stylized way, we may firstly try to represent the connection between policies, according to their sources (funds and measures), and uses. Figure 2 provides this representation for three major EU policies, that is, structural policy (Structural Funds and Cohesion Fund), Pillar I (EAGF) and Pillar II (EAFRD) of the CAP.

We can identify 7 different uses of funds, each with a different implication in terms of transmission over the economy. Both pillars may be intended as contributions either to income of agriculture households or to agricultural investments. Which of them actually prevails depends on how the policy is designed and delivered. In addition, we may distinguish between conventional investments (physical capital) and investments in human capital, knowledge or R&D, whose aim is to induce technological progress and, therefore, increase factors' productivity. For simplicity, and according to discussion above, we call these latter *Lisbon-related investments*.

CAP payments, however, can be delivered to non-agricultural uses, i.e. households non involved in agricultural production as well as investments in sectors other than agriculture. This is evidently possible for Pillar II funds, as some measures are explicitly dedicated to non-agricultural sectors within the rural economy (for instance, Axes 3 measures of current RDP). Though marginally, payments directly flowing to non-agricultural subjects can also be possible for Pillar I, either as administrative/bureaucratic costs or as coupled support in favour of agents operating in the downstream sectors of the supply chains (for instance, aids to product transformation).

[12] Among possible outcomes targeted by agricultural and rural policies, we may include also environmental and consumer concerns, or market stabilisation (Arovuori, 2008, p. 4). These are evidently aspects of major relevance in evaluating the CAP and its reforms. However, they are not considered here as the attention is specifically put on regional growth and economy-wide implications.

[13] This very first allocation across regions is the real focus of large part of the literature and often encounters serious problems in terms of policy data availability at the regional level; this will be discussed in section 4.1.

Figure 2 – Flow of funds from policies (source) to uses (and *vice versa* through taxes); price support is excluded

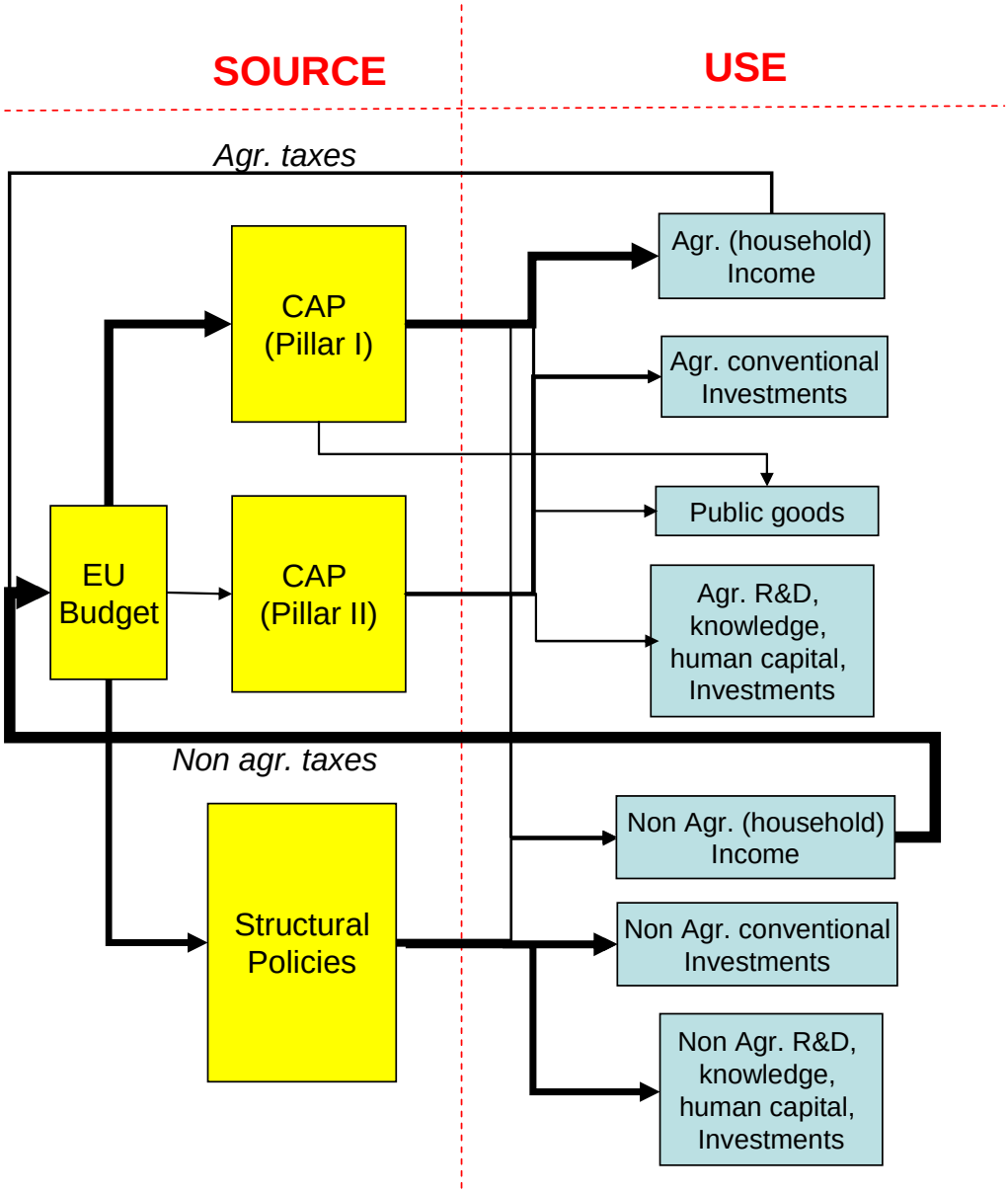

A final use of CAP funds is the payment of public goods. These measures cover costs, usually beard by farmers, aimed at improving or reconstructing some public good (mainly, but not exclusively, environmental goods). Therefore, they can be considered neither as additional income (as they cover additional costs) nor as investments, since they do not necessarily generate a demand of capital goods and their eventual positive impact on factors' productivity, if any, is not necessarily limited to the single farm or the agricultural sector.

Similarly, we can allocate structural funds to different possible uses.[14] They are mainly intended as investments in non-agricultural sectors (Esposti and Bussoletti, 2008) and can be distinguished, as well, in conventional and Lisbon-related investments. However, a smaller part of these funds may directly sustain household income (Sapir et al., 2003). These uses may evidently interest agriculture and agricultural households, though in a small amount, and probably less than proportionally, due to

[14] The same can be done for Cohesion Fund, in principle, though this is not a regional policy *strictu sensu*.

the at least partial substitutability between CAP and structural policies (for instance, investments in human capital for farmers are already included in Pillar II of the CAP, thus partially rule out analogous investments founded by the ESF).

As already mentioned, this allocation across possible uses may be arbitrary as can not be usually inferred from policy data. These data, if available, only concern the allocation across funds and measures, but not all measures can be univocally attributed to a specific uses or to a known proportion among uses. The most evident case is the attribution of direct coupled payments of Pillar I. Though coupled to well-identified activities this does not necessarily mean that these funds are entirely invested in agricultural activity to cover its costs and improve capitalization (Bonfiglio et al., 2006). On the contrary, they may be just consumed or saved by agricultural household and, thus, should be regarded as income support.

Figure 3 exemplifies the reallocation of CAP funds according to most relevant changes occurred in CAP design since 1992. From the introduction of direct payments in 1992, all CAP reforms brought a relevant reallocation across the different uses of Figure 2 (European Commission, 2001b, ch. 6). This is evidently the case of the 2003 (or Fischler) Reform: decoupling entails a substantial (albeit to a variable and unknown extent) reallocation form agricultural investments to agricultural household income; mandatory cross-compliance, as additional costs, a transfer from agricultural income and investments to public goods and, possibly, to non-agricultural income or investments in form of bureaucratic and administrative costs (Farmer, 2007; Nitsch and Ostenburg, 2007); modulation an explicit transfer from Pillar I to Pillar II which implicitly means a transfer from agricultural income to either agricultural or non-agricultural investments and to public goods.[15]

The 2005 reform of Pillar II, with the consequent attribution of funds in the context of the 2007-2013 financial perspectives, should have resulted in a more strategic approach, namely a more specific attention to Lisbon-related investments. At the same time, for the period 2007-2013, a reallocation of funds (at least in relative terms) from the CAP to structural policies should redirect money towards non-agricultural uses (European Commission, 2007a).

Finally, in the current HC proposal, beside further reallocation due to full decoupling and larger modulation, the gradual extension of the regional payments (regionalization) to all countries might imply a reallocation of funds across regions (Anania and Tenuta, 2008) and, consequently, a reallocation across uses given the different structures of regions.

Providing a quantification of such funds' reallocation across uses as effect of CAP reforms is, however, particularly difficult. An attempt can be made by comparing the last year before the implementation of the 2003 Reform (therefore, 2004) with the first year of full application of both reformed Pillar I and II (2007). Such comparison is tentatively displayed in Figure 4. Allocation is made by assuming that decoupled payments support agricultural income while coupled direct payments support conventional agricultural investments. However, we do not actually know how

[15] In Pouliakas et al. (2007), for instance, modulation is modelled as a transfer of support from agricultural household income mainly to investments in the construction sector (but also education, business services and public administration).

much of these direct coupled payments, are reallocated to income or to Lisbon-related investments (for instance, education).

Figure 3 – Major changes in CAP budget allocation over the period 1992-2010

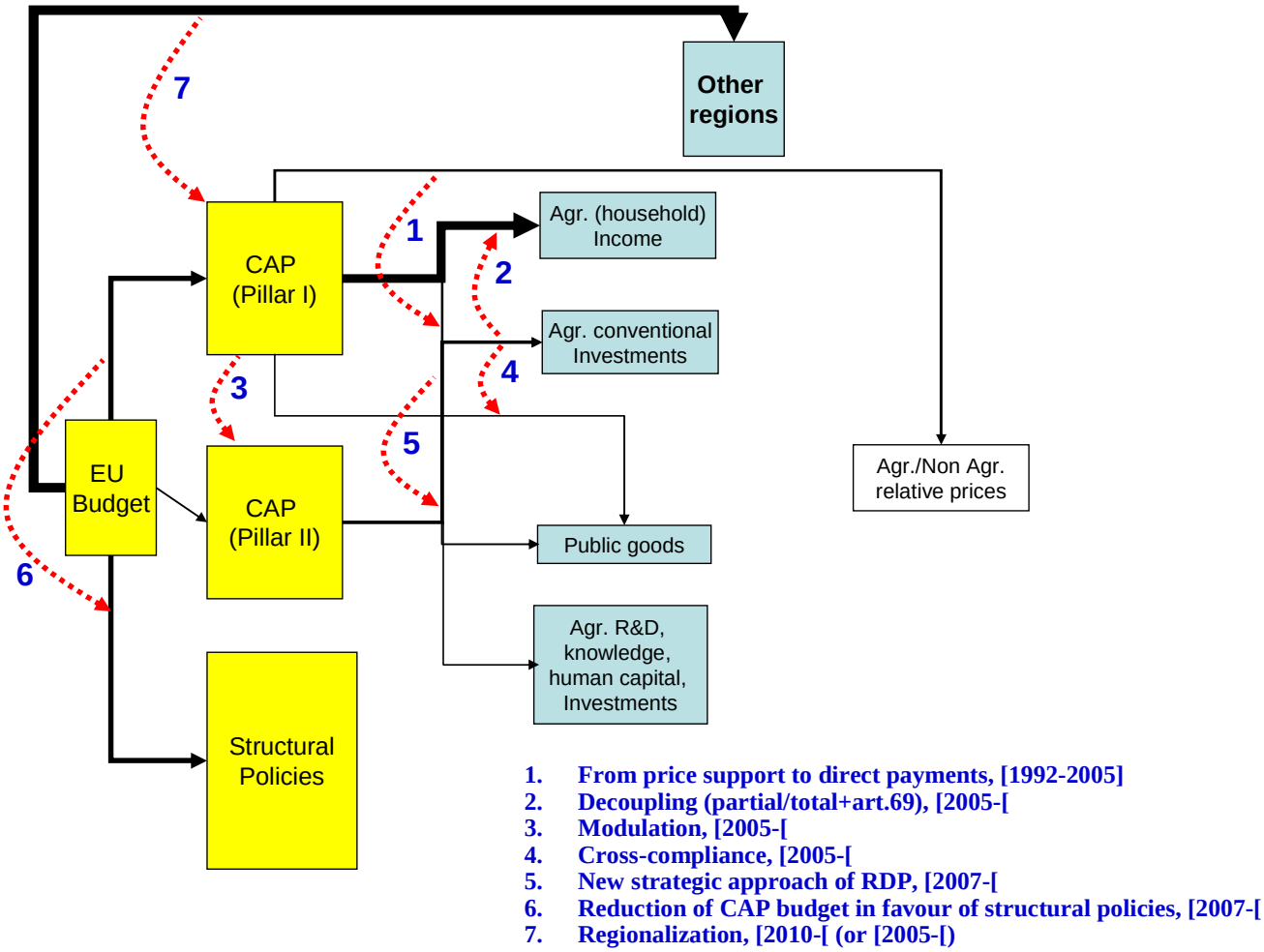

For Pillar II funds, allocation among uses is achieved by re-classifying the respective measures (for 2004 and 2007) according to their content and objective as detailed in the appendix (Table A.1).[16] This reclassification has been then applied to regional RD Programmes to obtain the allocation in terms of real funds. This can not be done at the EU scale as detailed enough information for many regions or countries is lacking. Values are thus obtained by applying to the whole Pillar II budget the distribution across measures observed in the Italian case. Table 1 reports such distribution over this reclassifying scheme also for two very different Italian regions (the richest and the poorest, one in the Competiveness Objective, the other in the Convergence Objective) and for Latvia, who is expected to represent a very different situation in terms of policy implementation not only for its geographical position but also as a NMS. As may be appreciated, the differences across these different cases are not too large; therefore, the use of the Italian averages instead of the real EU proportions should not bias too much the attribution of Pillar II funds across uses.

[16] An analogous interpretation of 2007-2013 RDP measures according to the Lisbon Strategy's aims can be found in EC (2005a, p. 3).

Though several effects are still to be observed after 2007 (for instance, modulation from Pillar I to II), we may appreciate that over these three years the main reallocation concerns a reduction of agricultural investments towards agricultural household income, though we are not really in the condition to observe to what extent this occurs. In fact, the effect of decoupling is, at least partially, compensated by the change in the distribution of Pillar II funds across measures and, thus, uses. A reallocation towards public goods can be observed as well (though the contribution of cross-compliance in this respect can be hardly measured). A further relevant effect, induced by larger funding and different design of Pillar II, is the reallocation towards non-agricultural uses, prevalently investments. Among these latter (both in agriculture and in other sectors) a larger share of Lisbon-related investments can be appreciated (about 1 billion € more in 2007 with respect to 2004), though in absolute this remains a minor use of total CAP funds.

Under the extreme assumption that all decoupled payments go directly to agricultural income and all coupled payments to agricultural investments (here including the purchase of all agricultural inputs),[17] the reforms would have implied a net decrease of these latter for more than 20 billions €. Evidently, this change in the use of funds may have caused major impact within the regional economy, in particular on agricultural production itself (in terms of employment, production, productivity, etc.) and on those sectors that are more vertically integrated (either upstream or downstream) with agriculture. Furthermore, the real impact in terms of investments can only be detected once all the transmission effects generated by this initial change in funds allocation are expressed.

Once funds are allocated across units and uses, the hardest task in evaluating the economy-wide effects of policies is the analysis of their transmission within and between regional economies. Figure 5, though in a very stylized form, represents the set of linkages transmitting funds from the initial allocation to other sectors and regions, eventually producing the outcome in terms of sectoral and regional growth.[18] This transmission occurs through savings and demand induced by either consumption or investments. Demand also depends on relative prices which, in turn, may be affected by Pillar I measures (price intervention) and, together with investments and technical progress (i.e., Lisbon-related investments), may condition factors' productivity in each sector. Differentials in factor productivity across sectors and regions, then provoke reallocation of factors and, finally, differentials in sectoral and regional output (and income) growth.

Reconstructing this whole set of relations in a coherent methodological framework also allowing for empirical policy analysis is challenging. Nonetheless in the last few years several fruitful efforts and steps forward in this direction has been made and now this kind of evaluation, al least partially, can be practically achieved.

[17] For a more detailed motivation of this assumption see Bonfiglio et al. (2006, pp. 126-127). Balamou et al (2008, pp. 6-7), as well as Kilkenny (2003), present a similar assumption in this respect.

[18] For simplicity in Figure 5, and in relative discussion, we do not consider the possible transmission of support to lower prices of production inputs. This aspect may actually be relevant in analysing the effect of decoupling in particular on land market and price also because it may, in turn, affect agricultural structure (for instance, farm size). For more details on these aspects see also Courleux et al. (2008). Some CGE models, however, do take into account the effects on the land market (Roberts, 2008; Finizia et al., 2005).

Figure 4 – Tentative comparison of EU funds' allocation across uses in 2004 and 2007 – billions (bn) €

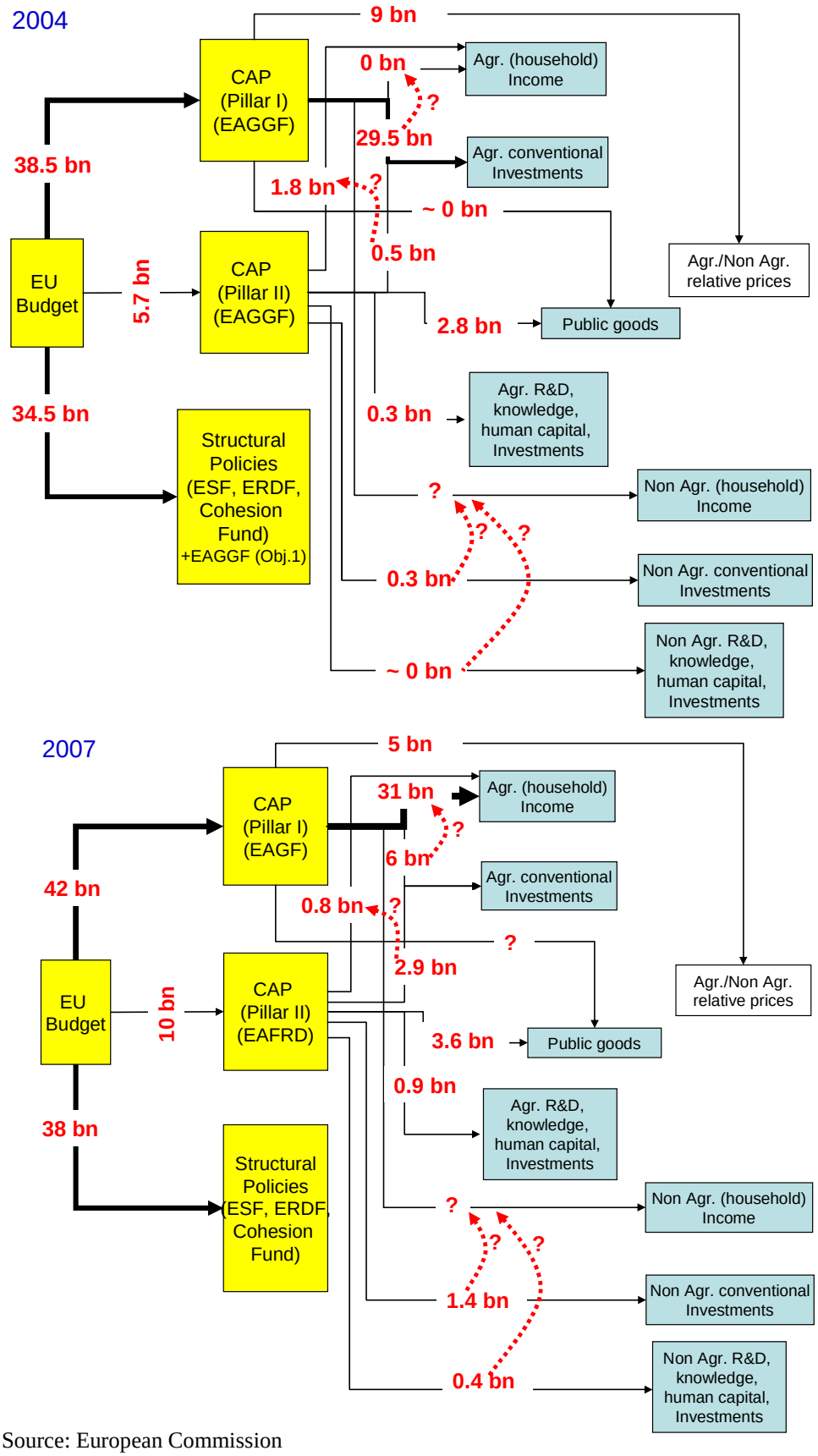

Source: European Commission
Note: Data on RDP refer to 2005 and 2007, for 2005 also include the LEADER initiative; pre-accession funds and co-financing not included.

Table 1 – Reclassification and allocation of Pillar II funds (2007) in Italian regions and Latvia (see table A.1)

	Italy	*Italian richest region – Lombardy (Competitiveness)*	*Italian poorest region – Calabria (Convergence)*	*Latvia*
Ag. Income	8.7%	8.4%	5.2%	11.6%
Ag. Investments (non-Lisbon)	29.6%	28.3%	35.0%	38.4%
Ag. Investments (Lisbon-related)	9.6%	6.0%	7.1%	4.8%
Public goods	37.2%	45.5%	37.3%	24.9%
Other sectors – Income	0.0%	0.0%	0.0%	0.0%
Other sectors – Investments (non Lisbon)	14.5%	10.8%	14.2%	20.4%
Other sectors – Investments (Lisbon-related)	0.4%	1.0%	1.1%	0.0%
Total	100%	100%	100%	100%

Source: Elaboration on data from Saktiņa (2007), Sotte and Ripanti (2008), Sotte and Camaioni (2008)

3.3. Multiregional and multisectoral models

In the last few years a large body of studies has been produced to analyse the impact of the recent CAP reform. The focus of most of these studies is on agriculture trying to answer this basic question: what happens to the primary sector after the introduction of decoupling, mandatory cross-compliance, modulation, RDP, regionalization, etc.? Some of these studies specifically concentrate on typical Lisbon-related issues, that is, the reform impact on farm efficiency and productivity, innovation and competitiveness, investments, employment and job creation.[19]

This valuable research effort, however, is not completely satisfying with respect to the perspective here adopted. These studies mostly concentrate the analysis of CAP reform within the strictly sectoral boundaries. Though they may provide evidence on the possible effects on productivity, efficiency, job creation etc., these gains can not be generalized to the whole regional economy. In other words, they do not consider the whole set of linkages that eventually make these first agricultural impacts transmitted to other sectors and regions. Some works actually try to extend the analysis to the territorial context (this is particularly true for RD measures and their relation with Pillar I; see Mantino, 2006, for instance). Still, however, there is not a systematic analysis of the economy-wide outcomes and, therefore, of the consequences on regional growth and cohesion.

[19] Just to select a few, we can mention some papers presented at the recent EAAE Congress in Ghent on these subjects: Courleux et al. (2008), Katranidins and Kotakou (2008), Zimmerman and Heckelei (2008), Douarin (2008), Helming et al. (2008), Lambarraa et al. (2008), Latruffe et al. (2008a, 2008b), Midmore et al. (2008). Older studies still dealing with these Lisbon-related issues within the agricultural context (often with reference to previous reforms, in particular Agenda 2000) are shortly reviewed in Kuokkanen and Vihinen (2006).

Figure 5 – Transmission of support over the regional economy and across regions

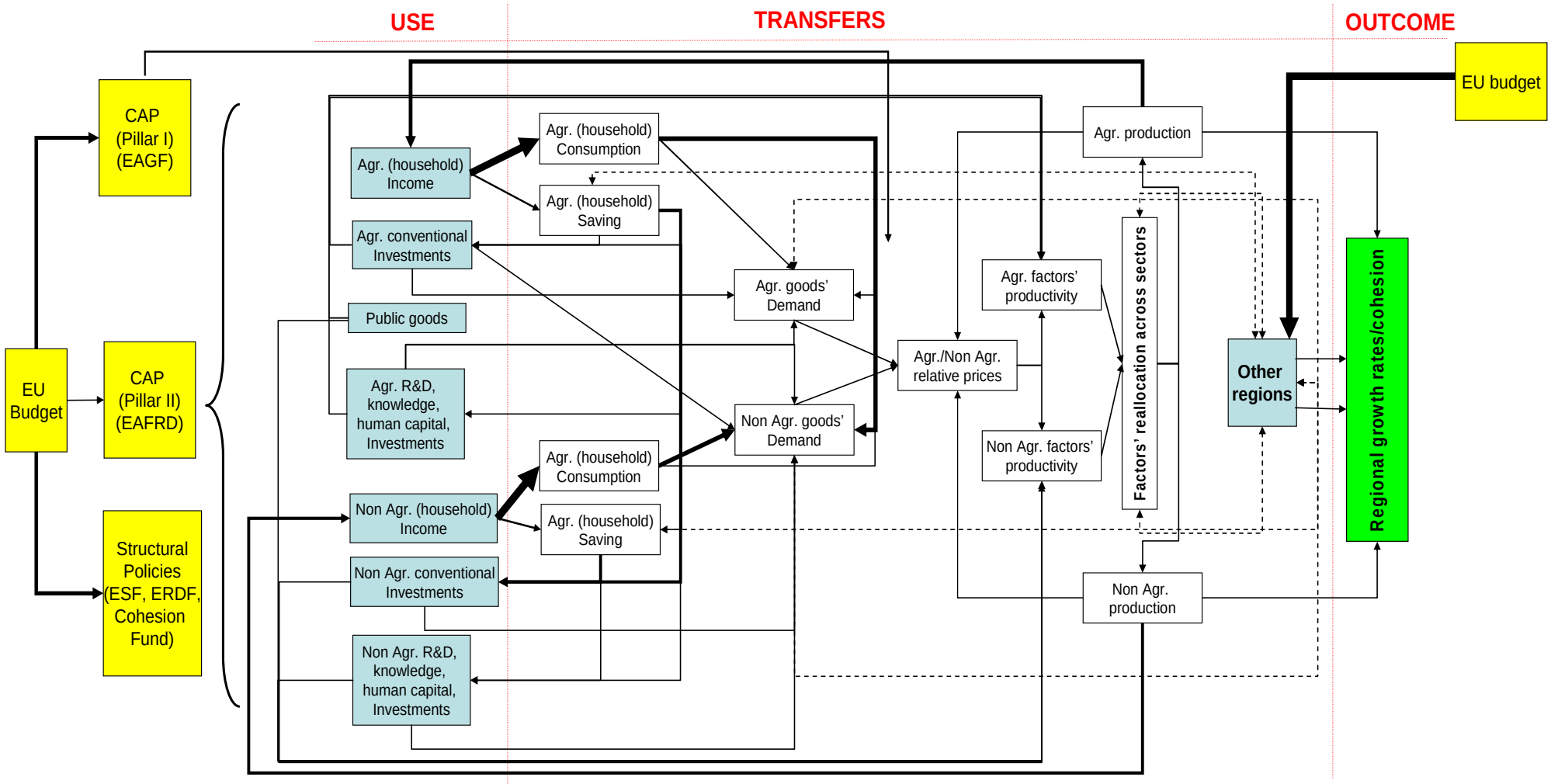

As argued in previous sections, the economy-wide impact of the CAP only partially depends on funds allocation; it is rather subject to the transmission of these effects which, in turn, depends on 3 orders of motivations:

- (relative) performance of regional agriculture (factor productivity) that affects its capacity to hold back resources and contribute to other sectors' growth;
- structure of the regional economy (and in particular the degree of vertical integration of agriculture with other sectors);
- openness of the regional economy, that is integration with (or dependence on) other regions (entity and quality of flows with other regions).

To achieve this insight we need multisectoral and multiregional models allowing for a detailed introduction of policy instruments. Owing in particular to some pioneering works in the nineties and to a significant research effort spent in this direction in the very last years, three kinds of models can be now adopted to pursue this evalutation: Multisectoral (I/O, SAM and CGE) models; NEG (New Economic Geography) models; Multisectoral growth models (Esposti, 2009).

All these modelling approaches are in principle able to represent the complex transmission activated by some change in policy design and implementation, though each of them shows specific limitations and potentials. In practice, though they may provide a detailed representation of flows within and between the regional economies, they may still miss the correct representation of some detail of the policy itself (for instance, the abolition of mandatory set-aside). Moreover, such complexity often means large data requirements and raises several practical issues in their correct calibration/estimation. For these major reasons the empirical applications to the economy-wide impact of the CAP reform are still limited and, evidently, very recent. A consistent bulk of studies already exists for the first group of models, almost nothing with reference to NEG and multisectoral growth models. Nonetheless, these still remain the most promising approaches for analysing the CAP from the perspective of regional growth and cohesion and deserve a detailed treatment.

The use of I/O (Input-Output) models to analyse the economy-wide effects of the CAP has been pioneered by some early studies in the nineties (Midmore, 1993) and became of larger use in the recent years (Bonfiglio et al., 2006). Its main advantage is represented by the possible large sectoral disaggregation with several different agricultural sectors and food industries allowing for a very detailed analysis of linkages related to agricultural policies. In practice, this potential is limited by available information that often requires the regionalization of national or macroregional I/O tables according to some appropriate procedure (Bonfiglio, 2006), though, in principle, regional I/O tables could also be constructed with *ad hoc* surveys allowing more flexibility in terms of sectoral disaggregation and precision.

In this latter case, however, it would be preferable to use surveys to build regional SAMs (Social Accounting Matrices), as they actually allow for a more complete representation of the regional economy and, therefore, for a more accurate policy analysis. I/O models only consider flows across sectors, thus they can be very useful to analyse vertical integration of agriculture with food sectors or other industries. Nonetheless, relations occurring among agents (households, institutions, etc.) as well as flows of factors of production are lacking. Considering the change in funds allocation depicted in figure 3, the inclusion of all policy measures in I/O models is not easy as they must be directly expressed as change of the demand vector.

It is becoming prevalent to use regional I/O tables as a base to build SAM models. These show greater flexibility in entering policies, though construction of accurate SAMs can be unaffordable in many regions for the consistent amount of additional statistical information or superior data they require. Once this effort is made and the regional SAM constructed, it often becomes "natural", in turn, to use the SAM not as such but as the base to build and calibrate CGE (Computable General Equilibrium) models (Roberts, 2007; Pouliakas et al., 2007). Differently from I/O and SAM, CGE models represent equilibrium relations in all relevant markets (goods and services, factors of productions, etc.) together with a complete representation of flows occurring among sectors and agents within the regional economy. As market equilibrium models, these approaches also allow a more explicit role of prices and this may be of particular interest as far as CAP admits market intervention. Starting from the pioneering works of Kilkenny (1993) and Lofgren et al. (2002), several studies attempted to analyse the economy-wide effects of the CAP within a CGE framework.[20]

However, calibration of CGE may be empirically critical. Additional information concerning, for instance, quantities, prices and elasticities, as well as arbitrary assumptions, are required (Roberts, 2007; Pouliakas et al., 2007). Therefore, sensitivity analysis is needed, especially on policy impact, to better figure out the actual role of these "artificial" factors.

More generally, in all versions (from I/O to CGE) these multisectoral models share common drawbacks. Two of them, in particular, may be relevant in the present context. Firstly, they often model closed economies or just admit import and export flows but without any explicit representation of the links occurring with other regions. This limit can be overcome by constructing rural-urban inter-regional SAMs (Roberts, 1998; Psaltopoulos et al, 2006) or multiregional (often bi-regional) CGE models (Lofgren et al., 2002; Balamou et al., 2008)[21]. They remain, in fact, aspatial models (Balamou et al., 2007) as do not take into account those inter-regional linkages that deserved increasingly attention in the last decade about the relation between rural-urban areas or between highly-developed and less-developed regions.

[20] See Finizia et al (2005), Roberts (2007) and Balamou et al. (2007) for more details and in depth review of this literature. Other approaches also use CGE, or SAM, models to analyse the distributional effects of the CAP across different types of farms (Rocchi et al., 2005; Cavalletti and Rocchi, 2006) or on the productive performance of agriculture itself after the 2003 reform (Gohin, 2006).

[21] This can be achieved also within a SAM model (see Psaltopoulos et al., 2006, for details).

Such aspects involve agglomeration economies, commuting and migration, imperfect market competition, and can hardly be included in more conventional CGE models.[22]

Originally designed to analyse international trade and specialization (Krugman, 1991), NEG models have been then proposed to study the economy-wide impact of sectoral and regional policies taking into account inter-regional core-periphery patterns induced by agglomeration economies and non-competitive markets (Gruber and Marattin, 2007). Agriculture tends to be closer to perfect competition than manufacturing and service sectors. Moreover, primary production mainly concerns rural areas and regions, and these territories take less advantage of agglomeration economies. Therefore, regions with higher presence of agriculture and with stronger rural characters may be significantly and negatively affected by aspects emphasised in NEG models. The impact of CAP reform may also be influenced.

Though multiregional and multisectoral, however, NEG models do not usually provide a sectoral disaggregation comparable with SAM or CGE models. Moreover, information and data they require are often not available and consequent calibration remains arbitrary. Until now, the real applicability of these models for an insightful analysis of the economy-wide effects of CAP is still to be demonstrated. Among the few applications to regional policy analysis we find studies on trade and fiscal policies or on commuting behaviour and infrastructure (Gruber and Marattin, 2007), but not on agricultural or rural policies.

The second major limitation of I/O-SAM-CGE models concerns their fundamentally static nature. This occurs not only because coefficients are fixed, as typically happens in I/O tables. This problem could be avoided, for instance, by updating I/O tables over time (the so-called dynamic I/O models) (Bonfiglio et al., 2006). The critical issue mostly concerns the fact that these are not growth models as they do not represent those fundamental mechanisms underlying aggregate growth; in particular, capital accumulation and technological change. In this sense, they are not dynamic models and, therefore, can not figure out the longer-run cumulated effects of a change in the regional economy at a given point of time.[23]

In practice, as also stressed by Balamou et al. (2007), in these models the impact of policies is analysed with comparative static exercises, that is, by comparing two different static equilibria over time (Balamou et al., 2007). This misses the longer-term and permanent effects implied by growth and, in particular, those aspects on which recent EU policy reforms have paid particular attention. The emphasis on Lisbon-related issues such as human capital, R&D and knowledge, depends on the fact that these factors may endogenize technical change and permanently improve growth performance of a given regional economy. Representing

[22] Some attempts, however, have recently been made in this direction; see Felici et al. (2008), van Bork and Treyz (2005) and Thissen (2005) as examples.

[23] It is sometimes made explicit that policy analysis and simulations run with these approaches only represent short or medium-terms impacts (Bailey et al., 2006, p. 337). It should be reminded that some very interesting dynamic extensions of CGE models have been recently proposed, also for analysising agricultural and rural policies (Finizia et al., 2005; Felici et al., 2008). Nonetheless, they still can not be considered growth models *strictu sensu*.

them just as conventional (physical) investments prevents from a more correct evaluation of this kind of policies. In particular, some of the typical arguments underlying the convergence hypothesis, and the impact of policies in this respect, imply temporary or permanent effects on growth dynamics (Esposti, 2008). As the focus here is on regional growth and convergence, it represents a major limitation of these models.

Most convergence studies are based on conventional (neoclassical) aggregate growth models which are, unfortunately, not able to represent the growth process and the intersectoral linkages at once. However, more recently, multisectoral growth models have been proposed and this would allow, at least in principle, a more correct representation of growth implications due to change in intersectoral flows. Esposti (2009) reviews the set of these formal models trying to represent such interdependencies within a General Equilibrium (GE) framework, thus dealing with the stylised facts of (aggregate) growth and structural change (namely, change in sectoral shares) at once. Some of these models also admits trade (open economies) thus showing how linkages with other regions (countries) may, in fact, change the response of a regional economy to an exogenous shock.

Though quite promising, this kind of approach can not still be considered a reliable tool for policy evaluation for two major reasons. Firstly, there is a weak empirical support underlying these models. In most studies, numerical examples are carried out to demonstrate how models can plausibly reproduce the empirical evidence but not much is said and done to assess whether assumptions on which models are drawn really find empirical support. Much work on estimation or calibration is therefore needed. A second but more crucial problem concerns the role of policies. As these models are candidates to run policy evaluation with particular reference to CAP reform and its economy-wide effects, it must be acknowledged that little has been done to clarify how these specific policies (decoupling, modulation, RDP measures, etc.) should enter these growth models.[24] Though multisectoral, the disaggregation adopted is very limited (there are often two or three-sector models); consequently, the detail with which the policy can be modelled has still to be improved. Nonetheless, as will be discussed in section 4.2, the use of aggregate growth models may still provide very interesting insights on the relation occurring between strictly sectoral policies, such as the CAP, aggregate growth and growth convergence within the EU (Esposti, 2007; Bivand and Brunstad, 2003, 2006).

Within regional economics literature there is, in fact, a long tradition of another kind of macroeconomic models aimed at analysing regional policies but not specifically designed and applied to the CAP. It can be traced back to early pioneering models (as the REMI model; Treyz, 1993); the major advantages of these approaches consists in being estimated and not calibrated. As such, they are often used to achieve a more reliable evaluation of regional

[24] In this respect, it is worth noticing that the HERMIN model (Bradley et al., 1995, 2003) is based on endogenous growth literature to capture the long-run supply-side (that is, growth) impact of policies (EU structural funds, in particular). Therefore, it can be considered as a relevant step in the direction of growth models suitable for empirical policy analysis. The extension of this model to incorporate the CAP and RDP, however, has not been developed so far.

policy impact. More recently, such models have also been designed to study the impact of EU structural policies within regional economies and on regional growth. As an example, we can mention the HERMIN model (Bradley et al., 1995, 2003). These approaches have been progressively improved to include both GE and NEG features (van Bork and Treyz, 2005). As models of multisector and open regional economies, even in their current state their extension to agricultural and rural policy evaluation could be of interest.

In general terms, extension and adaptation of all these methodological frameworks to agricultural and rural policy evaluation is relatively recent and should still be improved. Some research projects have recently tried to put together the best practitioners in the field trying to apply these kinds of approaches to CAP issues. Among others, we can mention the TERA and the ADVANCED-EVAL research projects, both funded under the 6th EU Framework Programme. Several proposals, solutions and approaches emerged in these projects may deserve further attention and improvements in the future.[25]

4. Evidence

We may finally ask whether empirical research is really able to answer the main questions raised in the previous sections. In principle, the abovementioned approaches may afford this kind of analysis. They have been used in empirical studies just to cope with part of the problem (taking into account only some CAP measures or scenarios) thus providing an often partial and incomplete picture. By collecting and critically reviewing this set of empirical studies, however, we may still provide a possible answer on the role and contribution of CAP, and 2003-2005 reform, to regional growth and cohesion across the EU.

To better understand the issue under study, we may articulate the analysis in a sequence of four specific questions:

- Does an increase of CAP support (in whatever form) favour regional growth?
- Does the change in Pillar I support, from price support to coupled direct payments and then to decoupled payments (SFP), affect the contribution of CAP to regional growth and cohesion?
- Does resource shift from Pillar I to Pillar II and, within the latter, from non-Lisbon to Lisbon-related measures favour growth (cohesion)?
- Does the stronger integration of agriculture within the regional economy (in particular, vertical integration with the food sector) and with external economies affect these results and how?

[25] More details can be found in the respective research sites: www.tera.it and www.adavanced-eval.eu. Not discussed here for the lack of published empirical applications so far, but of potential interest for the future, is the development, within the ADVANCED-EVAL project, of an Agent-Based Model combined with a General Political Economy Equilibrium model (CGPE-ABM) to evaluate RD policies.

The first question is somehow a general and primitive matter on which all other questions depend. A longer tradition of empirical studies thus exists on this issue, though it sometime presumes a positive answer. We thus start this review of the empirical evidence from two extreme perspectives on the first question.

4.1. The distributional argument

The empirical analysis on the territorial or regional impact of CAP has become a major research concern only in the last fifteen years (Sotte 1995; Laurent and Bowler 1997). This can be explained by the fact that the construction of disaggregated regional data on CAP support was a major problem, in particular when this support was primarily delivered in the form of market intervention. In these early studies how CAP expenditure is distributed across EU regions represents the critical question. Though this distributional concern was one of the major criticism raised about the CAP already in early eighties (see the Siena Memorandum, for instance; Barbero et al., 1984), rigorous empirical studies on this aspect only started in the mid-nineties and few pioneering works provided a major impulse in this direction.[26] In particular we can mention the studies made by Tarditi and Zanias in the late nineties (Tarditi and Zanias, 2001) and by the EC in preparation of the Second Report on Socio-economic Cohesion (European Commission, 2001a).

These two studies firstly made clear that the computation of CAP support distribution across regions would not, by itself, exhaust the issue. A more rigorous calculation should also take into account how regions contribute to the EU (thus, the CAP) budget. When price support represented the largest part of CAP support, analysing this side of the distributional issue was particularly difficult. Not only did regions contribute directly to the CAP budget through taxes; they also contributed indirectly through higher food prices paid by their consumers. But, at the same time, their farmers indirectly received a further support due to higher prices. Consequently, computing the net support each region received from the CAP meant disaggregating the gross contribution of the CAP region-by-region and, then, calculating how much each region paid and received directly and indirectly. This calculation was not (and it is still not) easy and, therefore, most of the research effort was just spent in such direction in order to better understand the distributional implication of the CAP across EU territories (regions).

Empirical evidence emerging from these early studies is, in fact, controversial. Tarditi and Zanias (2001) concentrate on the impact of price support. On the one hand, they detect positive effects (that is, favouring poorer areas) in terms of territorial distribution both among countries and within each member country at regional level.[27] On the other hand, despite this

[26] See also Kuokkanen and Vihinen (2006, p. 6-10) for a detailed survey of the literature.

[27] Tarschyis (2007) somehow generalizes this conclusion by stating that "*if the gross disparities before taxes and public expenditures are compared to net disparities after these public interventions [...] we will find that […] regional disparities are much smaller than normally assumed*".

positive distributional outcome, price support reduces overall regional efficiency, thus hampering competitiveness and economic development. This latter conclusion anticipates the discussion in section 4.2.

If we limit our attention to the purely distributional issue, the EC preparatory study for the Second Cohesion Report (European Commission, 2001a) provides a quite different conclusion. The difference may be explained by the fact that this latter study focuses more on direct payments (and the impact of 1992 reform) rather than price support. Nonetheless, it eventually concludes that "*if we take into account both direct payments and price support, it is evident that the distribution of the support has changed not significantly*" with the 1992 reform (European Commission, 2001b, chapter 6, p. 7). As a consequence, "*the regions and farms, producing more, [continue to] receive also the bulk of the price support. This implies an uneven distribution of support at territorial level and between farms*" (European Commission, 2001b, chapter 5, p. 5).

This latter interpretation on the distributional implication of the CAP became progressively prevalent even when support increasingly moved from price support to coupled direct payments and, finally, to decoupled payments. In 2003 the ESPON research network (founded by the EC) started a research project aimed at analysing the distribution of CAP support over the EU space (NUTS III regions) with specific emphasis on the possible effect of 2003 reform and on the differences emerging between Pillar I and Pillar II. The underlying hypothesis is that decoupling could imply a reduction in the uneven distribution of support across territories and that Pillar II may play a major role in this respect, its funding being mostly and allegedly directed towards less developed EU regions.

The conclusions of this ambitious research work were published in Shucksmith et al. (2005) with the title "*The CAP and the regions*". The message, at least with respect to Pillar I, is a confirmation of the 2001 EC study: Pillar I of the CAP works against cohesion as more money (at least if measured as support *per ha*) go to richer regions; that is, it behaves as a regressive policy (Nuñez Ferrer, 2007).[28] The 2003 reform (actually started in 2005) is not expected to significantly change this outcome, mostly because only few countries opted for the regionalization scheme and, thus, distribution of the support across regions was substantially frozen at the 2001-2003 levels (Shucksmith et al., 2005, p.138).[29] The picture emerging for 2000-2006 Pillar II is not much different. Though large differences emerge across measures and countries (INEA, 2006, 2007), the eventual outcome remains the same:

[28] "*Pillar I support acts in such a way that it does not contribute towards the economic and social cohesion objectives of the EU […] Pillar I support per hectare goes unambiguously to richer regions, support per worker is distributed more ambiguously*" (Shucksmith et al., 2005, p. 58).

[29] "*The results suggest that the MTR CAP reform proposals would have increased CAP direct payments more in […] prosperous areas*" thus "*suggesting that the overall impact of the MTR proposals on farm incomes would be territorially neutral*" (Shucksmith et al., 2005, p.138). The same conclusion, as mentioned before, was also reached by the EC in its Second Cohesion Report with respect to the impact of 1992 reform (European Commission, 2001b, chapter 6, p. 7). Anania and Tenuta (2008), however, demonstrate how the introduction of regionalization, according to its different possible implementations, may imply relevant distributional effects on Pillar I expenditure.

no clear negative relation occurs between Pillar II support and regional income.[30] Albeit poorer regions tend to be more rural, rural areas of richer regions show a better capacity to attract EU resources, and this makes Pillar II at best neutral in distributional terms (Shucksmith et al., 2005, p. 66).

Partially supported by other studies (Anders et al., 2004), the idea of the CAP working against cohesion on the basis of such purely distributional argument, soon became prevalent[31] (Roberts, 2008), and it also gained space in official documents. The Sapir Report itself (Sapir et al., 2003, p. 58) states that "*adding CAP [both pillars] and the other internal spending programme funds to cohesion policy disbursement, the simple correlation between total Community fund disbursement and GDP levels per head across the 17 macro-regions drops to –0.4 (in 1991) and to –0.2 (in 1995 and in 2000)*". Quoting the abovementioned ESPON study, in its Forth Cohesion Report the EC states that "*CAP […] market policy support tends to benefit the more developed rural areas […] concentrated more in core regions in northern and western Europe and less in the peripheral regions in the east and south*"; however, "*since 1992 […] reform of the CAP has increased its effects on cohesion*" (European Commission, 2007a, p. 167). As seen, this latter statement only partially takes into account the empirical evidence which would suggest, in fact, that this lack of positive linkage with cohesion could also be generalized to Pillar II and to more recent CAP reforms. Nonetheless, these official documents acknowledge the possibility that Pillar I of the CAP may work contrary to cohesion objectives across the EU, and that, though the empirical evidence is often based on the CAP before the 2003 reform (that is, on data up to 2005), this evidence also suggests that such reform is not doing very much to remove this inconsistency.

These studies on the distribution of the CAP support across EU territories, and its eventual change after the recent reform, have the major merit of focusing their attention on the practical issues underlying the correct calculation of such distribution. At the same time, however, the conclusions of this stream of literature may be questionable for two main reasons. Firstly, the alleged inconsistency of CAP with respect to cohesion objectives largely depends on how CAP contribution is computed.[32] It can not be considered in absolute values (due to the large heterogeneity in regional size) and, while it may be true that support *per ha* is larger for richer region, this is not necessarily the case in terms of support *per AWU* (Agricultural Working Unit) or of "CAP intensity", that is *per unit of regional GDP* or *per*

[30] "*Contrary to expectations, Pillar II support is inconsistent with cohesion objectives, favouring the more economically viable and growing areas of the EU*" (Shucksmith et al., 2005, p. 66).

[31] "*Despite the rural development policies, it is questionable if the CAP as a whole promotes cohesion. The contradictory effect of the CAP on cohesion is mentioned in some textbooks on the EU*" (Kuokkanen and Vihinen, 2006, p. 7). "*The CAP has also been associated with negative […] effects. The distribution of income effects has been found to be contrary to the principles of cohesion with the richest areas and farmers benefiting most*" (Balamou et al., 2008).

[32] It may be noticed that, differently from Tarditi and Zanias (2001) and EC (2001), the analysis carried out by the ESPON study does not really compute net transfers but only considers gross transfers. This may in fact generate some misleading evidence. Moreover, it does not consider the whole amount of EU funds received by any region, in particular the lagging ones, and thus may cause a further misspecification problem, as will be underlined in the next section.

head. The latter measure, in particular, seems more appropriate when dealing with overall cohesion (and not with agricultural convergence) and it apparently does not reveal any positive correlation between CAP payments and regional GDP (Esposti, 2008).

The second and more important problem of this distributional argument is that it implicitly assumes than one additional Euro spent in the i-th region compared to the j-th region gives the former an higher growth impulse. In other words, it assumes that CAP payments really provide a positive contribution to regional growth. As a consequence, if richer regions receive a larger support the growth gap with poorer regions is expected to increase. The validity of this assumption, however, has never been demonstrated in these studies while, in fact, it is strongly questioned by another stream of empirical works that consequently reach an opposite conclusion on the relationship between CAP, growth and cohesion. In general terms, "distributional" literature overemphasizes the political issue of funds' allocation across territories, while underestimates the economic relevance of how these funds are spent (Pillar I or II, which kind of measures, etc.) within the regional economies, thus activating a complex transmission across subjects, sectors and regions.

4.2. The counter-treatment hypothesis

Tarditi and Zanias (2001) and, more generally, Hall et al. (2001), already realized that the allocation of CAP funds across regions does not exhaust the issue about the contribution of CAP to growth and cohesion. Even if the net contribution of CAP to EU's poorer regions is positive, this does not necessarily imply that these regions grow faster. On the contrary, CAP support may prevent regional economies from achieving a more productive sectoral structure and more efficient production processes, i.e., from being more competitive.

In Tarditi and Zanias (2001), this negative effect of CAP on regional competitiveness may eventually offset the positive net distribution towards poorer regions they observe. In their analysis, CAP's negative feedback mostly operates through price support that makes agricultural production, agricultural mix and allocation of productive resources across sectors inefficient.[33] It would follow that, as market intervention and price support was progressively replaced by direct support in 1992 and 2000 reforms, this negative effect on regional growth is expected to vanish. This should become even more evident after the introduction, in 2003, of decoupled payments whose declared objective, among others, was to favour re-orientation of regional agricultures to market according to their specific specializations and comparative advantages.

[33] In this regard, Kuokkanen and Vihinen (2006, pp. 7 and 11) comment on Tarditi and Zanias's work as follows: "*According to the authors, the impact of the agricultural price policy of the EU is a result of different and contrasting effects both in terms of equity (income distribution) and efficiency (competitiveness and economic development) […]. Farm price support generates large distortions in the domestic market at inter- and intra-sectoral level, reducing EU competitiveness […]. In the long term, price support hinders structural adjustment in rural areas*".

In terms of inter-sectoral factor allocation, however, direct payments, both coupled and decoupled, may maintain their distorting effects. As far as they remain somehow linked to agriculture, their major effect is to increase remuneration of agricultural labour, capital and land which will eventually reduce the productivity gap with other sectors and, therefore, the progressive loss of resources from agriculture to other uses. If this may definitely occur under coupled payments, it is still not clear as to what extent it remains valid under decoupled support. This depends on how this support is really independent on maintenance of production factors within agriculture.

Beside the results of Tarditi and Zanias (2001), whose applicability to the current CAP is quite limited, as mentioned, we may find only few studies that have tried to empirically assess this negative effect of CAP on regional growth and, eventually, on growth cohesion. Here, we may mention two recent works by Bivand and Brunstad (2006) and Esposti (2007) who have analysed regional convergence across EU and the role of CAP in this respect within a conventional neoclassical aggregate growth model.[34]

In Bivand and Brunstad (2006) we find both the basic argument and the empirical evidence in favour of this interpretation. In their results, "*regions with lower net transfer to agriculture experience slightly faster growth than regions with larger net transfers*" (Bivand and Brunstad, 2006, p. 288). This evidence is fully consistent with the authors' expectations: "*we expect the level of agricultural policy support to be negatively related to regional growth, because higher levels of support are likely to slow the reallocation of labour and capital to non-agricultural sectors*" (Bivand and Brunstad, 2006, p. 287).[35]

In their work, however, the mechanism that would eventually make the CAP work against growth is not really incorporated within the adopted approach. Therefore, even if a negative relation between regional growth and CAP net transfers may be observed, it is not possible to explicitly test the validity of the interpretation proposed by the authors. Also some problems with data emerge. These authors compute CAP net transfers apparently only considering price support and not direct payments. Since their data refer to 1996, when direct payments had been already introduced, this would make results only partially valid. Moreover, their analysis neglects that most EU regions also receive a significant amount of funds through structural policies. This particularly holds true for those poorer regions that receive a strong specific support under Objective 1 (or Convergence Objective) since 1989. Including CAP support and not these other policy transfers could lead the econometric analysis to incur misspecification problems thus making results less reliable.

[34] The use of a conventional growth convergence framework to analyze the CAP's possible inconsistency with regional cohesion has also been proposed by Rodrìguez-Pose and Fratesi (2002).

[35] This concept of CAP as a policy that mainly operates within regional economy by artificially maintaining high employment levels in agriculture is also shared by Urwin (1991) who states that the CAP has been since the beginning of the eighties a social rather than economic policy, that aims at maintaining the agricultural employment, as the industrial and service sectors could not absorb the surplus labour supply (Kuokkanen and Vihinen, 2006, p. 12).

Starting from the same intuition of Bivand and Brunstad (2006), Esposti (2007) tries to specifically focus on these latter issues. In this model, CAP support received by each region is additional to other EU funds. In particular, as the attention is on the impact of CAP on convergence, CAP support is investigated together with Objective 1 funds to detect whether the effects of these funds are reciprocally reinforced or offset. Within an aggregate growth model, CAP affects regional growth by compensating the lower labour productivity of agriculture.[36] As in Tarditi and Zanias (2001) and in Bivand and Brunstad (2006), this could slow down regional growth and thus, if structural funds do operate in favour of convergence, CAP eventually generates a *counter-treatment effect*. However, estimates obtained do not support this hypothesis of counter-treatment. The conclusion turns out to be that CAP has a substantially neutral effect in terms of regional growth and cohesion.

It has to be noticed that both quoted works actually refer to years before the 2003 (2005) reform (1996 in Bivand and Brunstad; 1999-2000 in Esposti). Therefore, their results could be hardly extended to the new CAP. Nonetheless, while Bivand and Brunstad, as Tarditi and Zanias, concentrate on CAP support deriving from market intervention, which makes the extension of results to the current CAP much less reliable, Esposti only considers regional support from direct payments.[37] As CAP "artificially" improves agricultural labour productivity thus retaining labour in the primary sector, the results observed in Esposti could also be valid for decoupled payments and, as such, for the CAP reformed in 2003.

Despite their specific results and shortcomings, these studies are of major interest here as they may eventually share the same conclusion with the literature of the purely distributional argument: CAP works against cohesion. This conclusion, however, is reached from opposite directions. According to the distributional argument, the CAP acts against cohesion because poorer regions receive less support, the assumption being that the CAP does favour regional growth. Therefore, the major problem becomes how to allocate it across EU territories. According to the counter-treatment hypothesis, on the contrary, the CAP may act against cohesion just because it reduces the regional growth performance or, at least, reduces the growth enhancing effect of other EU funds. Consequently, redistributing the support in favour of poorer regions would not solve the problem.

Beside the empirical support currently available in favour of this latter interpretation, we can acknowledge that it goes more in detail with respect to the questions under discussion here. From the point of view of the mere distribution of funds across regions, the 1992, 2000 and 2003 reforms had a minor impact (European Commission, 2001b; Shucksmith et al., 2005). Nonetheless, they did have, as discussed extensively in section 3.2, major implications on how these funds are delivered within the regional economies, who and how uses them and, eventually, how they affect regional development processes. Therefore, on the one hand, this

[36] The Second Cohesion Report itself (European Commission, 2001a) agrees on the fact that, due to lower productivity in agriculture, the relative poorer performance of some regions is often linked to the higher degree of employment in agriculture.
[37] See Esposti (2007, p. 124) for a more detailed explanation.

perspective seems more interesting. On the other hand, it makes explicit how answering the initial questions of this section does require more appropriate approaches.

4.3. Multisectoral models: empirical evidence and limits

The empirical studies mentioned above are not capable to provide any useful insight into the processes that CAP activates within the regional economy and, above all, can not easily distinguish, in this respect, the different forms of support. As a consequence, they can say little on the impact of 2003-2005 reform. To achieve this, the multisectoral and multiregional approaches discussed in section 3.3 may be particularly helpful.

The purpose, here, is not to provide an exhaustive review of all results provided with this kind of approaches. We want to concentrate just on those results that specifically refer to (mostly *ex-ante*) evaluation of the 2003-2005 reform and, at the same time, may somehow be emblematic of potentials and limits of this stream of studies. In practice, these empirical works model CAP and its reform taking into consideration only some specific aspects (for instance, decoupling, modulation or some RDP measures), since including all measures may be too complex and, in some cases, unaffordable.[38] Therefore, they often provide a partial perspective on the impact of the reform.

Bonfiglio et al. (2006) analyse the impact of decoupling on rural regions in the Balkan area (mostly NMS regions) using an I/O approach.[39] Focusing on accessing regions, besides the application of the CAP, policy scenarios also simulate the impact of pre-accession funds and of integration with the EU markets expressed as increase in export-import flows. In line with Figures 2 and 3, coupled direct payments enter the regional I/O tables as agricultural investments while decoupled payment as consumption (increase in agricultural households' demand). Structural funds, including RDP, are allocated across sectors case-by-case though, in general terms, they are considered as investments prevalently concentrated in agriculture and in the construction and food sectors.

As acknowledged by most practitioners in this area (Bonfiglio et al., 2006, p. 126; Balamou et al, 2007, p. 21), I/O approaches tend to overestimate the impact of such changes and, as such, of policies. Nonetheless, despite the reliability of their absolute values, results are still interesting in relative terms, that is, to compare two different kinds of support; for instance, decoupled instead of direct coupled payments.

What emerges from this study, roughly,[40] is that moving from coupled to decoupled support has a positive impact on regional output and income (i.e., growth) but not necessarily on

[38] For instance, modelling mandatory cross-compliance is not easy within this kind of models.
[39] These are the results of a research project (REAPBALK) funded by the EU under the 5th FP. Another similar application of the I/O methodology to policy evaluation can be found in Mattas et al. (2006).
[40] See Bailey et al. (2006) for a more detailed comparative analysis.

employment that may even be decreasing.[41] This occurs not only because we observe a decline in agriculture labour but also for the transmission of decoupling over the economy. In particular, the introduction of decoupled payments is negative for those sectors more vertically integrated with agriculture, the food sector and sectors producing inputs for agriculture, in particular, while it generates a positive stimulus on sectors less directly integrated, for instance services.

More insightful and reliable results on the impact of CAP reform on regional economies, however, can be provided by SAM and, above all, CGE approaches. Not simply because they should not incur overestimation of the effects, but mostly because they provide a more flexible and composite representation of how support is transmitted. An interesting SAM application to policy evaluation can be found in Psaltopuolos et al. (2006). Though the application concerns to a quite specific regional case (in Crete, Greece), the most interesting aspect in this study is the use of an inter-regional SAM to describe the linkages and the transfer of CAP support occurring among three areas with different income and development levels (urban-rural or core-periphery relations). The CAP impact can not be directly referred to the 2003 reform, as the study only covers the period 1988-1998. Nonetheless, CAP measures are grouped in three categories: support to income, support to agricultural productivity (investments) and support to other activities of the regional economy. This distinction makes this simulation still able to provide useful insight on the effects generated by the different uses of funds shown in Figures 2 and 3.

It comes out that support to agricultural households demonstrates the highest positive impact on regional output and employment. Thus, it also generates the largest transfers to bordering regions. This latter effect is not so large compared to expectations for a small open economy and, above all, it is substantially asymmetric as it favours more urban areas than rural territories. Moreover, in urban areas the multiplicative effects in favour of other sectors are larger than in rural ones. At the same time, support directly aimed at improving agricultural performance or at favouring diversification is less effective as it generates smaller leakages within and outside the local economy.

Recently developed CGE approaches may offer a more detailed insight into the combined effect of Pillar I and II support especially after the new design of RDP in 2005.[42] Felici et al. (2008), by developing an evolution of the REMI model towards general equilibrium features, provide an interesting analysis on the impact of some RDP measures within an Italian region (Tuscany). The interest in these results mainly lies on the fact that the authors consider measures supporting conventional investments within (measures 1.2.1, 1.2.3) and outside agriculture (3.1.1), measures favouring Lisbon-related investments (1.1.3) and, finally,

[41] For a more detailed discussion on the on-farm and off-farm labour allocation under decoupling, see Douarin (2008).

[42] Helming et al. (2008), for instance, analyse the impact of CAP reform (mainly in terms of market liberalization) on overall regional employment by using an highly aggregated CGE model called LEITAP which, in turn, is a modified version of the well-known GTAP model.

measures directly supporting income (1.1.2) (see Figures 2 and 3). This model also provides an intra-regional detail as flows occurring among provinces (NUTS III) are taken into consideration. Another interesting feature is that the model is able to generate results over time (the whole period 2007-2020), that is, it is able to take into account the dynamic effects induced by these measures (see also Finizia et al., 2005).

Unfortunately, the authors only report aggregate evidence, without distinguishing between the different measures and without clarifying whether the different impact occurring across provinces does depend on the initial allocation of funds or on the consequent transfers due to inter-provincial linkages. Nonetheless, results are still interesting as they show how the impact of these Pillar II measures distributes within the economy. Agriculture is, by large, the sector that benefits more (between 0.5% and 2% per year growth rate of sectoral value added). The overall impact is quite limited, always lower than 0.1% growth, either in terms of regional GDP or employment. The impact on the food sector, too, is probably less than expected: lower than 0.3% for both output and employment and about 1/4 of the impact observed in agriculture. This would suggest that Pillar II measures, even those allegedly aimed at improving productivity (or Lisbon-related), do remain mostly an agricultural intervention with a limited capability to stimulate downstream the non-agricultural industries.

Among the most relevant recent attempts to use the CGE framework to analyse the effects of CAP reform, we can consider the already mentioned TERA project (Roberts, 2008).[43] Comparable bi-regional (urban-rural) CGE models have been set-up for 6 EU regions (one for each of the following countries: Czech Republic, Finland, Greece, Italy, Latvia, Scotland). Within this framework, alternative policy scenarios include an overall reduction of CAP support, full decoupling and different degrees of modulation (from 20% to 100%).[44] Coupled support (also including price support) enters the model as a negative indirect activity tax associated to agriculture, which corresponds to an increase in factors' productivity within the sector. Decoupled support as an increase of agricultural household income; RDP measures as investments in non-agricultural sectors and, in particular, all funds are assumed to be invested within the construction sector "*in an effort to reflect Axes 3 spending*" (Pouliakas et al., 2007, p. 43).[45] Therefore, the allocation of funds to specific RDP measures is taken into account roughly and arbitrarily since funds really spent in Axes 3 are usually quite limited (Sotte and Ripanti, 2008; Sotte and Camaioni, 2008) and, as shown in Figure 4, investments flowing outside agriculture are a relatively small share.

[43] Though not discussed in detail here, another interesting application of a CGE model to the evaluation of the impact of CAP reform, and specifically concerning Italian agriculture, can be found in ISMEA (2004).

[44] In order to take into account the differentiated effect of CAP over different agricultural activities, agriculture itself is disaggregated in several sub-sectors. Moreover, other (non-agricultural) policies are also simulated within this CGE framework (see Pouliakas et al., 2007, for details). As mentioned, the NEG models elaborated within the TERA project have been used in scenario analysis, too, but only to simulate non-agricultural policies. Therefore, they are not discussed here.

[45] However, in some regions other sectors are also involved (education, business services and public administration).

Nonetheless, results emerging from this simulation are of major interests. The first remarkable outcome is that a 30% decrease in CAP support (without any other kind of compensation) may produce a very limited negative impact on overall regional growth and, in some cases, the impact can be even positive as it favours reallocation of factors outside agriculture.[46] This evidence would support the counter-treatment hypothesis while making the distributional argument intrinsically less significant. In fact, the major implication of this reduction is not on growth but on income distribution as it favours urban and non-agricultural households against agricultural and rural ones.

Results concerning decoupling are very interesting though very much surprising. On the one hand, in relative terms and as expected, decoupling tends to benefit non-agricultural and urban households and sectors. This urban-rural distributional effect is larger than in previous scenario because decoupling allows a stronger factors' reallocation out of agriculture. However, at the same time, the overall impact of decoupling on regional growth is negative, more than what observed under the reduction of coupled support. The fact that a reduction of CAP expenditure generates a better (less negative) growth impact than what obtained maintaining the same expenditure, though spent in other forms, is really unexpected and definitely deserves further assessment. The explanation of this result lies on the strongly negative impact of decoupling on primary production[47] which then transmits this negative effect downstream and upstream to integrated sectors. The positive effect on other less integrated sectors benefiting from decoupling (through consumption or factors' reallocation) is larger than in the case of reduced coupled support, but still not large enough to compensate the reduction on the primary and integrated sectors.

A final evidence concerns modulation. In this scenario, results are more strongly case-specific as for some regions the overall impact on growth is the highest, whereas in others is negative and also worse than other scenarios. Therefore, moving resources from Pillar I to Pillar II generates an effect whose sign and magnitude largely depends on regional characteristics. However, in general terms modulation activates a relevant reallocation process within the rural economy as the primary sector looses output and employment in favour of non-agricultural rural sectors, and in particular in favour services. On the one hand this would demonstrate that more funds delivered through Pillar II are not able to compensate the negative effects of decoupling in the primary sector but this can still be possible in downstream sectors, for instance the food industry. This reallocation within the rural territories also amplifies the transmission towards urban areas as leakages in this direction are evidently higher with respect to strictly agricultural support. However, it must also be

[46] As well emphasized by Tarditi and Zanias (2001) and EC (2001), this positive impact should also occur for the reduction of tax burden and food prices that increases the real income available to consumers. Given the specific way coupled support is included in these CGE models, however, these aspects are seemingly neglected. Also that part of price support that, as demonstrated by the OECD (1995) study, that actually goes to non-agricultural sectors is not entirely visible.

[47] This is evidently an expected result, largely confirmed by other studies (Gohin, 2006), though here the production decline may be more intense.

acknowledged that these results may be strongly affected by how Pillar II is arbitrarily modelled, as funds received through modulation are not allocated among actual measures but enter exclusively as investments in the construction sector. This possibly overestimates its effects on other rural sectors and on urban areas.

5. Some concluding remarks: Does the CAP reform work for regional growth?

This paper analyses the role of CAP and its recent reform in fostering regional growth and cohesion across EU regions. Though growth and cohesion represent two key-aspects of the current long-term strategy of the Union, this is only a partial perspective on the CAP, whose objectives and implications, either sectoral or general, are evidently more composite. Therefore, here we do not consider the important environmental and social aspects of CAP reform that, definitely, should not be excluded in an appropriate evaluation work (Midmore et al., 2008).

This partial point of view on the CAP reform also explains why the objective of this paper is not to provide suggestions on how CAP should be and which direction its next reforms should take. The analysis here is merely positive: it looks for the existing evidence about the contribution of the CAP to regional growth and critically reviews it. However, this review of the literature is not exhaustive as not all empirical works dealing with this aspect can be considered here. We only consider the most recent ones (specifically analysing the 2003-2005 reform) and those that seem more promising for the methodology they use and results they produce.

With respect to the four basic questions raised earlier in section 4, the reviewed evidence provides incomplete answers. First of all, CAP may be not neutral in terms of regional growth and, above all, its impact is not necessarily univocal. An increase in overall support may even reduce regional growth implying that allocation of funds across regions is not by itself informative on the consequence in terms of cohesion (or convergence).

More than allocation across regions, what seems critical in terms of growth implications is the allocation of assigned funds within the region. In particular, the change in Pillar I support from price support to coupled direct payments and, finally, to decoupled payments, implies an increasingly negative impact on agricultural production and employment that, if not compensated otherwise, may transmit to vertically integrated (either upstream or downstream) sectors. At the same time, due to factor reallocation outside agriculture, it may favour growth of other sectors which would eventually compensate the first negative impact. Ultimately, this compensation may generate an overall positive impact on growth. In most cases, however, empirical works indicate a negative effect of decoupling in regions that are more dependent on agricultural production (namely, rural areas), while benefits mostly favour urban areas and non-agricultural households. This transfer of benefits across sectors or regions, however, depends on how and how much a certain region is integrated with the bordering territories.

The key role of Pillar II measures, especially in its new strategic orientation, should be to compensate the negative impact of Pillar I reform on agricultural production and integrated sectors. By favouring the introduction of innovations, of new physical and human capital, and the creation of diversified activities, RDP should promote efficiency and productivity improvements in agriculture and other "rural" sectors. Apparently, however, this does not happen in most cases. According to several empirical studies, these measures do favour reallocation of support towards non-agricultural sectors within the rural economy, but their final impact remains prevalently limited to agriculture though still not compensating the negative effect induced by decoupling. Moreover, positive effects on non-agricultural activities are often transferred outside rural regions. Evidently, a more clear-cut targeting of Pillar II measures to specific needs and territories has still to be achieved.

These results are of major interest for the discussion on the effect of 2003-2005 reform and, above all, on the direction to be taken with the HC and post-2013 CAP reform. At the same time, they should be commented carefully as they evidently do not fully consider all the possible implications of the reform itself. In particular, the adopted methodologies can usually not adequately represent the impact that some measures (of both pillars) may have on farm efficiency and productivity. Decoupling itself, as well as several Lisbon-related RDP measures, may improve these performances as demonstrated by a significant amount of studies (Lambarree et al., 2008; Latruffe et al., 2008a, 2008b). After all, as already mentioned, models here considered are not, in most cases, growth models. Therefore, they do not pay enough attention to factors emphasized by the recent growth literature such as innovation, human capital, knowledge and on the consequent growth dynamics they activate. Evidently, on this aspect, significant improvements of the adopted methodologies can be expected.

The same argument also holds with respect to public (mostly environmental) goods. Even considering the contribution of the CAP only from a strictly growth perspective, it should be acknowledged that supporting the creation of public goods within agricultural production may have a positive growth impact both on the primary sector and on other economic activities. They may improve factor productivity in the long run and create new business opportunities for farmers, thus also favouring integrated sectors. However, even in this case, currently adopted methodologies and models do not specifically take care of these aspects. This may be a major drawback also with respect to future developments of the CAP, since many scholars and policy makers are putting an increasing emphasis on the provision of public goods as major CAP justification (Buckwell, 2008; Dutch Ministry of Agriculture, Nature and Food Quality, 2008).

Research in this field should aim at improving the currently adopted methodologies in these directions. At the same time, efforts should continue on more practical aspects. The systematic collection of data and the construction of a complete and consistent regional dataset reporting the allocation of CAP gross and net support is an unfinished work, and it is expected to improve (European Commission, 2001b). It must be acknowledged, in fact, that

the different results reported in the literature may still depend on the different computation of regional CAP support. More and better statistical information (obtainable, for instance, by improving the set of information collected through the FADN) is also needed on how CAP support is used by first-level recipients (mostly farmers) among different alternatives (saving, consumption, different kinds of investment in agricultural activity) depending on how this support is delivered (through prices, coupled or decoupled direct payments, Pillar II measures, etc.).

Though having in mind the need to improve the adopted research tools and the partial and incomplete evidence they provide, we may still try to draw at least two policy implications from these results. The first one is that the enlarged EU is extremely heterogeneous across its regions and this makes the answer to questions above strongly region-specific. Empirical results show that this answer may even be opposite moving from one region to another due to their large intrinsic and structural differences. For instance, comparing a Scottish and a Greek region, Balamou et al. (2008) show how the growth implication of decoupling may substantially diverge.

The development stage, the role and performance of agriculture and its integration with other sectors (mostly, the food sector), the region openness to trade, migration, commuting and capital flows, are all critical aspects for the regional economy's response to policy (CAP) changes. This makes modularity a strategic requisite to render EU policies more effective: what can be good for a region might not be good for another. It must be acknowledged that current CAP already contains different degrees of modulation. Regions (in practice, countries) may at least partially decide on the amount of coupled and decoupled Pillar I support to provide (for instance, through article 69 of 2003 reform that will be presumably maintained also within the HC). This flexibility in using Pillar I funds could be improved, in principle, by allowing co-financing. Mandatory and (where present) voluntary modulation can give flexibility in allocating resources between Pillar I and Pillar II according to the specific needs. Flexibility, to a significant extent, also exists in allocating Pillar II funds among the different measures.

In practice, the only modulation that regions (or countries) can not afford concerns the currently weak coordination and integration between the CAP and structural funds, also for the different respective programming documents and procedures. However, an attempt could be made to give the regions the possibility to modulate resources between EAGF-EAFRD and structural policies. This solution would somehow follow an argument already stressed by Tarditi and Zanias (2001) and confirmed by Kuokkanen and Vihinen (2006, p. 8): "*if such [CAP] transfers were allocated from rich to poorer regions without sectoral constraints, their impact would be much larger and more transparent*".

The second policy implication has mostly to do with the inter-regional and urban-rural distribution of effects. Evidence shows that, besides the initial allocation of funds, what really matters in assessing the impact of CAP across territories is how funds are then transmitted

over space. In particular, the progressive decoupling of Pillar I support and modulation in favour of Pillar II, though justifiable by a number of good reasons, may have the undesirable effect to favour urban regions (areas) to the detriment of rural ones.

This spatial redistribution inevitably affects the enduring debate on the regional allocation of CAP funds and its coherence with cohesion objective (the “distributional argument”) and, above all, informs the current debate about the regionalization of SFP. Depending on how regionalization is actually implemented, its alleged impacts (Anania and Tenuta, 2008) may be substantially amplified or reduced once these redistributional transfers across territories are appropriately taken into account.

This effect is strongly region-specific also, and it depends on the degree of openness of the regional economy under study and on the integration with the bordering regions. Therefore, a viable solution in this respect can hardly be generalized. But one possible policy development could be to allow strongly integrated regions (especially within urban-rural or core-periphery patterns) to also have an integrated management of CAP resources, at least of those admitting regional programming. For instance, in the case of RDP and maybe only involving few selected measures, multiregional programmes could be admitted to allow territories to take into account, and then compensate, these redistributional effects.

References

Anania, G. and A. Tenuta (2008), *Ehffetti della regionalizzazione degli aiuti nel Regime di pagamento unico sulla loro distribuzione spaziale in Italia*, Working paper, Gruppo 2013 - Forum Internaizonale dell'Agricoltura e dell'Alimentazione, Roma (forthcoming)

Anders, S., J. Harsche, R. Herrmann and K. Salhofer (2004), "Regional Income Effects of Producer Support under the CAP", *Cahiers d'Economie et Sociologie Rurales* 73, 103–121.

Arovuori K. (2008), *Controversies between stated agricultural policy objectives and policy measures in the EU's CAP*, Paper presented at the XII EAAE Congress – Ghent: "People, Food and Environments: Global Trends and European Strategies", 26-29 August.

Bailey A., Davidova S. and A. Zanni (2006), The medium-term perspectives: a final comparison, in: Bonfiglio A., Esposti R., and F. Sotte (eds.), *Rural Balkans and EU integration. An I-O Approach*, Milano: Franco Angeli, 337-373.

Balamou E., Pouliakas K., Roberts D. and D. Psaltopoulos (2008), Modeling the rural-urban effects of changes in agricultural policies: a bi-regional CGE analysis of two case study regions, Paper prepared for presentation at the 107th EAAE Seminar: *Modelling of Agricultural and Rural Development Policies*, Sevilla, Spain, 29 January-1 February.

Balamou E., Psaltopoulos D. and K.J. Thomson (2007), *Modelling agriculture, tourism and policy in a CGE environment*, Deliverable n. 4/a, TERA Specific Targeted Research Project, FP6-SSP-2005-006469 (http://ww2.dse.unibo.it/tera).

Barbero G., Bergmann D., Bublot G., Koester U., Larsen A., Mahé L-P, Marsh J., Ritson C., Sarris A., Tangermann S., Tarditi S. (1984), *The Siena Memorandum on the reform of the Common Agricultural Policy*, Conclusions of the Workshop on "The reform of Common Agricultural Policy", 17-18 Freburary, Certosa di Pontignano (Italy).

Bertoncini Y. (2007), *The EU budget as an instrument to finance collective goods: Key points for the debate*, Paper presented at the Seminar "The EU budget: What for?" held on 19th April 2007 in Brussels, Paris: Notre Europe (htpp://www.notre-europe.eu).

Bivand, R. and R. J. Brunstad (2003), Regional Growth in Western Europe: An Empirical Exploration of Interactions with Agriculture and Agricultural Policy, in: Fingleton, B. *European Regional Growth*, Berlin: Springer, 351–373.

Bivand, R. and R. J. Brunstad (2006), Regional growth in Western Europe: detecting spatial misspecification using the R environment, *Papers in Regional Science* 85, 277-297.

Bonfiglio A., Esposti R., and F. Sotte (eds.), *Rural Balkans and EU integration. An I-O Approach*, Milano: Franco Angeli.

Bradley, J., Herce J. and L. Modesto (1995), The HERMIN Project, *Economic Modelling* 12, 219–335.

Bradley, J., Morgenroth E. and G. Untiedt (2003), *Macro-regional Evaluation of the Structural Funds Using the HERMIN Modelling Framework*, Economic and Social Research Institute (ESRI) Working Paper 152, Dublin.

Buckwell A. (2008), *A CAP fit for the 21st Century*, Presentation at the XLV SIDEA (Italian Association of Agricultural Economics) Congress at Portici (Italy), 24-25 September.

Bureau J-C. and L-P. Mahé (2008), *CAP reform beyond 2013: An idea for a longer view*. Studies& Research 64, Paris: Notre Europe (htpp://www.notre-europe.eu).

Cavalletti B. and B. Rocchi (2006), Efficiency grounds and welfare effects in decoupling farm support. Insights from an AGE model of the Italian economy, *International Journal of Sustainable Development* 9, 106-121.

Courleux F., Guyomard H. and L. Piet (2008), *Mapping the decoupling: transfer efficiency of the Single Farm Payment Scheme*, Paper presented at the XII EAAE Congress – Ghent: "People, Food and Environments: Global Trends and European Strategies", 26-29 August.

Dall'erba S. and H. L. F. De Groot (2006), *A Meta-Analysis of Thirty Years of EU Regional Policy Evaluation*, Paper presented at the 46th Congress of the European Regional Science Association (ERSA), 30 August – 3 September 2006,Volos (Greece).

Douarin E. (2008), *Do decoupled payments really encourage farmers to work more off farm? A micro-level analysis of incentives and preferences*, Paper presented at the XII EAAE Congress – Ghent: "People, Food and Environments: Global Trends and European Strategies", 26-29 August.

Dutch Ministry of Agriculture, Nature and Food Quality (2008), *European Agricultural Policy 2020: The Dutch outlook*, 26 September 2008 (http://www.minlnv.nl).

Esposti R. (2006), La PAC e gli obiettivi di coesione nell'UE, *ARE – AgriRegioniEuropa* 2 (6), 26-28 (http://agriregionieuropa.univpm.it/).

Esposti, R. (2007), Regional Growth and Policies in the European Union: Does the Common Agricultural Policy Have a Countertreatment Effect?, *American Journal of Agricultural Economics* 89, 116–134.

Esposti R. (2008), Regional growth convergence and EU policies: Empirical evidence and measuring problems, *CESifo Forum*, 9(1), 14-22.

Esposti R. (2009), *The Driving Forces of Agricultural Decline. A Panel-data Approach to the Italian Regional Growth*, Department of Economics, Università Politecnica delle Marche, Ancona (Italy), mimeo.

Esposti, R. and S. Bussoletti (2008), The Impact of Objective 1 Funds on Regional Growth Convergence in the EU. A Panel-data Approach, *Regional Studies* 42, 159–173.

European Commission (2001a), *Unity, Solidarity, Diversity for Europe, Its People and Its Territory. Second Report on Economic and Social Cohesion*, Brussels: European Commission.

European Commission (2001b), *Study on the impact of community agricultural policies on economic and social cohesion*, Directorate-General for Regional Policy, Brussels.

European Commission (2004a), *A New Partnership for Cohesion. Convergence, Competitiveness, Cooperation. Third Report on Economic and Social Cohesion*, Brussels: European Commission.

European Commission (2004b), *Impact assessment of rural development programmes in view of post 2006 rural development policy*, Final Report, Directorate-General for Agriculture and Rural Development, Brussels.

European Commission (2005a), *Putting rural development to work for jobs and growth*, Special Edition Newsletter, Directorate-General for Agriculture and Rural Development, Brussels.

European Commission (2005b), *Working together for growth and jobs. A new start for the Lisbon Strategy*, Communication from President Barroso in agreement with Vice-President Verheugen to the Spring European Council, Brussels.

European Commission (2007a), *Growing Regions, Growing Europe. Fourth Report on Economic and Social Cohesion*, Brussels: European Commission.

European Commission (2007b), *Preparing for the "Health Check" of the CAP reform*, Communication from the Commission to the Council and the European Parliament, COM(2007) 722, Brussels.

European Commission (2007c), *Rural development in the EU*, Statistical and Economic Information, Report 2007, Directorate-General for Agriculture and Rural Development, Brussels.

European Commission (2008), *The Common Agricultural Policy: sorting the facts from the fiction*, MEMO/08/422, Brussels.

European Communities (2004), *Facing the challenge. The Lisbon strategy for growth and employment*, Report from the High Level Group chaired by Wim Kok, Luxembourg.

Farmer M. (2007), *The Possible Impacts of Cross Compliance on Farm Costs and competitiveness*, Deliverable 21 of the CC Network Project, SSPE-CT-2005-022727.

Felici F., Paniccià R. and B. Rocchi (2008), *Economic Impact of Rural Development Plan 2007-2013 in Tuscany*, Paper presented at the XII EAAE Congress – Ghent: "People, Food and Environments: Global Trends and European Strategies", 26-29 August.

Finizia A., Magnani R., Perali F., Polinori P., Salvioni C. (2005), *Construction and simulation of the General Economic Equilibrium Model Meg-Ismea for the Italian Economy*, Quaderni del Dipartimento n. 17, Dipartimento di Economia, Finanza e Statistica, Università di Perugia

Frandsen S.E. (2008), *European agriculture and the CAP: the Health Check, production and Trade*, Presentation at the Scientific Seminar. "Health Check and future perspectives of

the CAP: challenges for agriculture. A day of scientific dialogue", European Commission-DG Agriculture and EAAE, Brussels, 28 August.

Gohin A. (2006), *Assessing the 2003 CAP Reform: sensitivity to the decoupling of Agenda 2000 direct payments*, Working Paper 06/04, TradeAG Specific Targeted Research Project, FP6 n. 513666 (http://tradeag.vitamib.com).

Gruber S. and L. Marattin (2007), *Design of NEG models*, Deliverable n. 4/a, TERA Specific Targeted Research Project, FP6-SSP-2005-006469 (http://ww2.dse.unibo.it/tera).

Hall R., Smith A. and L. Tsoukalis (eds.), *Competitiveness and Cohesion in EU Policies*, Oxford: Oxford University Press.

Helming J.F.M., Verhoog D., van Meijl H. and P. Nowicki (2008), *Effects of CAP reform on regional employment in the EU*, Paper presented at the XII EAAE Congress – Ghent: "People, Food and Environments: Global Trends and European Strategies", 26-29 August.

HM Treasury and Defra (2005), *A vision for the Common Agricultural Policy*, London (www.hm-treasury.uk.gov; www.defra.uk.gov).

INEA (2006), *Rapporto sulle politiche dell'Unione Europea 2004-2005*, Osservatorio sulle Politiche Agricole della UE – INEA, Roma.

INEA (2007), *Territorio e imprese nell'articolazione del sostegno comunitario all'agricoltura italiana*, Osservatorio sulle Politiche Agricole della UE – INEA, Roma.

ISMEA (2004), *L'impatto della riforma della PAC sulle imprese agricole e sull'economia italiana*, Milano: Franco Angeli.

Jouen, M. (2007), *Redistribution or support to economic and social development? It is time to tell the truth about the EU cohesion policy*, Paper presented at the Seminar "The EU budget: What for?" held on 19th April 2007 in Brussels, Paris: Notre Europe (htpp://www.notre-europe.eu).

Jouen, M. and E. Rubio (2007), *The EU budget: What for?*, Synthesis Paper of the Seminar held on 19th April 2007 in Brussels, Paris: Notre Europe (htpp://www.notre-europe.eu).

Katranidins S.D. and C.A. Kotakou (2008), *Are CAP decoupling policies really production neutral?*, Paper presented at the XII EAAE Congress – Ghent: "People, Food and Environments: Global Trends and European Strategies", 26-29 August.

Kilkenny M. (1993), Rural/ Urban Effects of Terminating Farm Subsidies. *American Journal of Agricultural Economics* 75, 968-980.

Krugman P. (1991), Increasing returns and economic geography, *Journal of Political Economy* 99, 483-499.

Kuokkanen K. and H. Vihinen (2006), *Contribution of the CAP to the general objectives of the EU*, Background Note 4 of the Specific Support Action (6th FP), SASSPO-SSP4-022698.

Lambarraa F., Stefanou S., Serra T. and J.M. Gil (2008), *The impact of the CAP reforms on the efficiency of the COP sector in Spain*, Paper presented at the XII EAAE Congress –

Ghent: “People, Food and Environments: Global Trends and European Strategies”, 26-29 August.

Latruffe L., Bakucs L. Z., Bojnec S., Ferto I., Fogarasi J., Gavrilescu C., Jelinek L., Luca L., Medonos T. and C. Toma C. (2008), *Impact of direct payments on farms’ productivity in new member States before EU accession*, Paper presented at the XII EAAE Congress – Ghent: “People, Food and Environments: Global Trends and European Strategies”, 26-29 August.

Latruffe L., Guyomard H. and C. Le Mouël (2008), *Impact of CAP direct payments on French crop farms’ managerial efficiency*, Paper presented at the XII EAAE Congress – Ghent: “People, Food and Environments: Global Trends and European Strategies”, 26-29 August.

Laurent, C. and I. Bowler (1997, eds.), *CAP and the Regions: Building a Multidisciplinary Framework for the Analysis of EU Agricultural Space*, Paris: INRA Editions.

Lefebvre M. (2007), *The EU budget and the financing of European public goods*, Paper presented at the Seminar “The EU budget: What for?” held on 19th April 2007 in Brussels, Paris: Notre Europe (htpp://www.notre-europe.eu).

Lofgren H., Harris R.L. and S. Robinson (2002), *A Standard Computable General Equilibrium Model (CGE) in GAMS*, Microcomputers in Policy Research 5, IFPRI, Washington.

Mantino F. (2006), Evaluating Structural, Territorial and Institutional Impacts of Rural Development Policies in Italy: Some Lessons for the Future Programming Period (2007-2013), in: D. Diakosavvas (ed.), *Coherence of Agricultural and Rural Development Policies*, Paris: OECD, 281-290.

Marenco G. (2008), *Conoscenza della realtà e politiche agrarie: questioni aperte per la ricerca*, Presentation at the XLV SIDEA (Italian Association of Agricultural Economics) Congress at Portici (Italy), 24-25 September.

Mattas F., Loizou E. and V. Tzouvelekas (2006), *Agro-food Linkages in Rural Areas: An Empirical Evaluation of Integrated Development Programmes*, in: D. Diakosavvas (ed.), *Coherence of Agricultural and Rural Development Policies*, Paris: OECD, 141-152.

Midmore P. (1993), Input-Output forecasting of regional agricultural policy impacts, *Journal of Agricultural Economics* 44, 284-300.

Midmore P., Langstaff L., Lowman S. and A. Vaughan (2008), *Evaluating Pillar 2 employment impacts: case study methodology and results for East Wales*, Paper presented at the XII EAAE Congress – Ghent: “People, Food and Environments: Global Trends and European Strategies”, 26-29 August.

Nitsch, H. and B. Osterburg (2007), *Efficiency of cross compliance controls – public administrative costs and targeting*, Deliverable 18 of the CC Network Project, SSPE-CT-2005-022727.

Nuñez Ferrer J. (2007), *Reforming the Own Resources System: What for?*, Paper presented at the Seminar "The EU budget: What for?" held on 19th April 2007 in Brussels, Paris: Notre Europe (htpp://www.notre-europe.eu).

OECD (1995), *Transfers Efficiency of Agricultural Price Support*, Paris: OECD.

Pouliakas K., Phimister E., Roberts D., Thomson K., Balamou E., Psaltopoulos D., Hyytiä N., Kola J. and F. Galassi (2007), *Application and results of individual CGE analysis*, Deliverable n. 8, TERA Specific Targeted Research Project, FP6-SSP-2005-006469 (http://ww2.dse.unibo.it/tera).

Psaltopoulos D., Balamou E. and K.J. Thompson (2006), Rural/Urban Impacts of CAP Measures in Greece: An Inter-regional Social Accounting Matrix (SAM) Approach, in: D. Diakosavvas (ed.), *Coherence of Agricultural and Rural Development Policies*, Paris: OECD, 153-169.

Roberts, D. (1998), Rural-Urban Interdependencies: Analysis Using an Interregional SAM Model, *European Review of Agricultural Economics*, Vol. 25, pp. 506-527.

Roberts D. (2007), Design of CGE model, Deliverable n. 4, TERA Specific Targeted Research Project, FP6-SSP-2005-006469 (http://ww2.dse.unibo.it/tera).

Roberts D. (2008), *The territorial impacts of rural and regional policies: what do we know?*, Presentation at the XII EAAE Congress – Ghent: "People, Food and Environments: Global Trends and European Strategies", 26-29 August.

Rocchi B., Stefani G. and D. Romano (2005), Distributive impacts of alternative agricultural policies: a SAM-based analysis for Italy, *Cahiers d'Economie et Sociologie Rurales* 77, 85-112.

Rodrìguez-Pose,A. and U. Fratesi (2002), *Unbalanced Development Strategies and the Lack of Regional Convergence in the EU*, London School of Economics Research Papers in Environment Analysis 76, London.

Saktiņa D. (2007), *Relevance of structural policies and territorial factors (comparative analysis)*, Deliverable n. 13, TERA Specific Targeted Research Project, FP6-SSP-2005-006469 (http://ww2.dse.unibo.it/tera).

Sapir, A., P. Aghion, G. Bertola, M. Hellwig, J. Pisani-Ferry, D. Rosati, J. Viñals. and H.Wallace (2003), *An Agenda for a Growing Europe. Making the EU Economic System Deliver*, Report of an Independent High-Level Study Group established on the initiative of the President of the European Commission, Brussels.

Shucksmith, M., K. Thomson and D. Roberts (2005, eds.), *CAP and the Regions: Territorial Impact of Common Agricultural Policy*, Wallingford: CAB International.

Skogstad G. (1998), Ideas, Paradigms and Institutions: Agricultural Exceptionalism in the European Union and the United States. *Governance: An International Journal of Policy and Administration* 11, 463–490.

Sotte F. and B. Camaioni (2008), *The rural development programs 2007-13 of the Italian regions. A quail-quantitative analysis*, Paper prepared for the 109th EAAE Seminar "The CAP after the Fischler Reform: national implementations, impact assessment and the agenda for future reforms", Viterbo (Italy), 20-21 November 20-21st.

Sotte F. and R. Ripanti (2008), *I Psr 2007-2013 delle regioni italiane. Una lettura qualiquantitativa*, Working paper n.6, , Gruppo 2013 - Forum Internaizonale dell'Agricoltura e dell'Alimentazione, Roma.

Sotte, F. (ed.) (1995), *The Regional Dimension in Agricultural Economics and Policies*, Proceedings of the 40th EAAE Seminar –Ancona, CNR-RAISA.

Spinaci G. (2007), *EU budget, redistribution and cohesion policy*, Paper presented at the Seminar "The EU budget: What for?" held on 19th April 2007 in Brussels, Paris: Notre Europe (htpp://www.notre-europe.eu).

Tarditi, S. and G. Zanias (2001), Common Agricultural Policy, in: Hall, R., Smith A. and L. Tsoukalis (eds.), *Competitiveness and Cohesion in EU Policies*, Oxford: Oxford University Press, 179–216.

Tarschyis D. (2007), *What should be the redistributive function of the EU budget?* Paper presented at the Seminar "The EU budget: What for?" held on 19th April 2007 in Brussels, Paris: Notre Europe (htpp://www.notre-europe.eu).

Thissen M. (2005), RAEM: Regional Applied general Equilibrium Model for the Netherlands, in: F. van Oort, M. Thissen and L. van Wissen (eds.): *A survey of spatial economic planning models in the Netherlands. Theory, application and evaluation*, Rotterdam: NAi Publishers, 63-84.

Treyz G. I. (1993), *Regional Economic Modeling: A Systematic Approach to Economic Forecasting and Policy Analysis*, Norwell: Kluwer Academic Publishers.

Urwin D. (1991), *The Community of Europe: A History of European Integration since 1945*, London and New York: Longman.

van Bork G. and F. Treyz (2005), The REMI model for the Netherlands, in: F. van Oort, M. Thissen and L. van Wissen (eds.): *A survey of spatial economic planning models in the Netherlands. Theory, application and evaluation*, Rotterdam: NAi Publishers, 25-44.

Zimmerman A. and T. Heckelei (2008), *Farm structural change in German regions. An empirical analysis using micro and macro data*, Paper presented at the XII EAAE Congress – Ghent: "People, Food and Environments: Global Trends and European Strategies", 26-29 August.

Appendix

Table A.1 – Reclassification of RDP measures according to the different uses

	RDP 2004: measure codes	*RDP 2007: measure codes*
Agricultural Household Income	d, e.1, e.2, m, x.1, x.2, z, ab	1.1.3, 1.3.1, 1.3.2, 2.1.1, 2.1.2, 2.1.3, 2.2.4
Agricultural Investments (non-Lisbon)	a, j, k, u, v, ac, aa	1.2.1, 1.2.2, 1.2.3, 1.2.5, 1.2.6, 1.3.3
Agricultural Investments (Lisbon-related)	b, c, g, l, y	1.1.1, 1.1.2, 1.1.4, 1.1.5, 1.2.4, 4.1.1
Public goods	f, h&i, i.2, q, t	2.1.4, 2.1.5, 2.1.6, 2.2.1, 2.2.2, 2.2.3, 2.2.5, 2.2.6, 2.2.7, 4.1.2
Other sectors – Household Income	-	-
Other sectors – Investments (non Lisbon)	n, o, p, r, s, w	3.1.1, 3.1.2, 3.1.3, 3.2.1, 3.2.2, 3.2.3, 4.1.3, 4.2.1
Other sectors – Investments (Lisbon-related)	-	3.3.1, 3.4.1, 4.3.1

Source: Elaboration on European Commission (2007c)