Staff Paper P08-6 **July 2008**

Staff Paper Series

Using Real Options to Evaluate Investments in Ethanol Facilities

by

Tianyu Zou and Glenn Pederson

Department of
APPLIED
ECONOMICS

College of Food, Agricultural
and Natural Resource Sciences

UNIVERSITY OF MINNESOTA

Staff Paper P08-6 **July 2008**

Using Real Options to Evaluate Investments in Ethanol Facilities

by

Tianyu Zou and Glenn Pederson

The authors wish to acknowledge the helpful comments on an earlier draft by Jeanne Scharf at AgStar Financial Services, and the comments and data provided by Vernon Eidman and Douglas Tiffany at the University of Minnesota. Also, we thank the U.S. Department of Agriculture and the Agricultural Marketing Resource Center (AgMRC) at Iowa State University for support of this project under Special Projects Grant 412-30-54.

Copies of this publication are available at http://ageconsearch.umn.edu/. Information on other titles in this series may be obtained from: Waite Library, University of Minnesota, Department of Applied Economics, 232 Classroom Office Building, 1994 Buford Avenue, St. Paul, MN 55108, U.S.A.

Abstract

This paper uses real option analysis to evaluate investment decisions in ethanol facilities. First, we consider the option to expand the scale of a conventional ethanol plant. Second, we evaluate the option to choose a production technology given three dry-milling choices – a conventional natural gas-fueled plant, a stover-fueled plant, and a stover-plus-syrup-fueled plant. We develop input-output coefficients and annual cash flow projections for a hypothetical small ethanol plant (50 million gallon capacity) using available industry and market price data.

Scenario analysis is done to evaluate the effect of profitability and volatility on the option to expand. We find that the best decision during 2001-07 is often to expand, since the net present values of the investment project are positive. However, there are states in the binomial tree where it is best to wait. In relatively few such states the expansion project is simply rejected. During the early part of the period low profitability and high volatility more frequently favor strategies of waiting to invest until prices and profitability improve. During the latter part of the period (2005-07), profitability is sharply higher and most often the best strategy is to invest in the expansion. This result is consistent with the observed rapid increase in industry production capacity during 2005-07. However, more recent market developments, sharply higher corn and natural gas prices and slightly higher ethanol prices during late 2007-early 2008, have combined to sharply reduce expected plant cash flow and profitability and cash flow volatility. The implication is that plant investment plans in 2008 would be increasingly placed on hold, which the real option model correctly predicts.

The real option analysis of technology choice indicates that the stover-fueled technologies are most often chosen when compared to a natural gas-fueled conventional technology based on the prices that existed during 2001-2007.

I. Introduction

About 79% of U.S. ethanol production is from conventional corn-based, dry-milling plants. The profitability of these plants escalated in the early 2000's and this stimulated rapid growth of investments in ethanol production facilities. The number of plants has increased from 50 in 1999 to about 134 in early 2008, and the associated production capacity has increased sharply (Figure 1).

Figure 1. U.S. Ethanol Industry Production Capacity, 1999 to Early 2008 (Present)

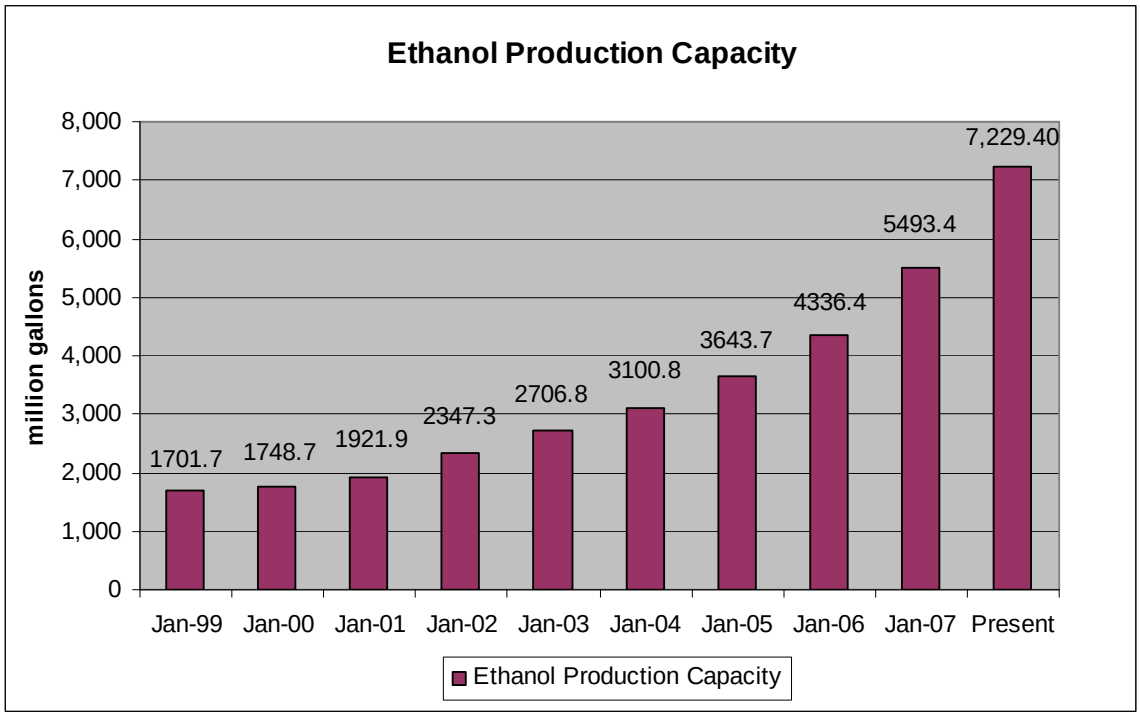

Source of data: Renewable Fuels Association.

However, with increasing prices of corn and natural gas and greater concern about the energy efficiency of ethanol, investments in ethanol plants have also faced greater uncertainty in recent years. These uncertainties are related to market price risks and the choice among competing technologies. Each of these factors contributes significantly to the current level of uncertainty about the profitability of investments in ethanol facilities.

Price Uncertainty

Tiffany and Eidman (2003) study the factors that significantly affect the profitability of dry-milling ethanol plants. Using sensitivity analysis, they draw the conclusion that the key factors are corn price, ethanol price, natural gas price, and conversion factors. Price uncertainty in the ethanol industry derives from variability in the cost of feedstuffs (corn), variability in the cost of energy, and variability in the price of ethanol. In part due to the expanding scale of the ethanol industry and higher domestic demand for corn, there has been upward pressure on corn prices. During the past ten years, the annual average rate of growth of the cash price of corn in Chicago has been about 6.5%. However, there has been an 85.3% increase just during 2006-2007. This is the highest annual growth rate of corn price during the last ten years.

The cost of energy has also become more volatile. For a typical dry-milling ethanol plant, the natural gas consumption to produce a gallon of ethanol ranges from 26,000 to 54,000 BTU (USDA, 2002). This energy cost represents a large portion of the cost structure for dry-milling ethanol plants. During 2004-2005, the energy cost was about 15% of the total cost per gallon of ethanol produced. This is the second highest cost after corn cost. The natural gas price in 2006 was about twice what it was in 1996. These factors lead to higher volatility of costs and more volatile profits from ethanol production.

Figure 2. Ethanol F.O.B. Price, Omaha, Nebraska, 1982-2006

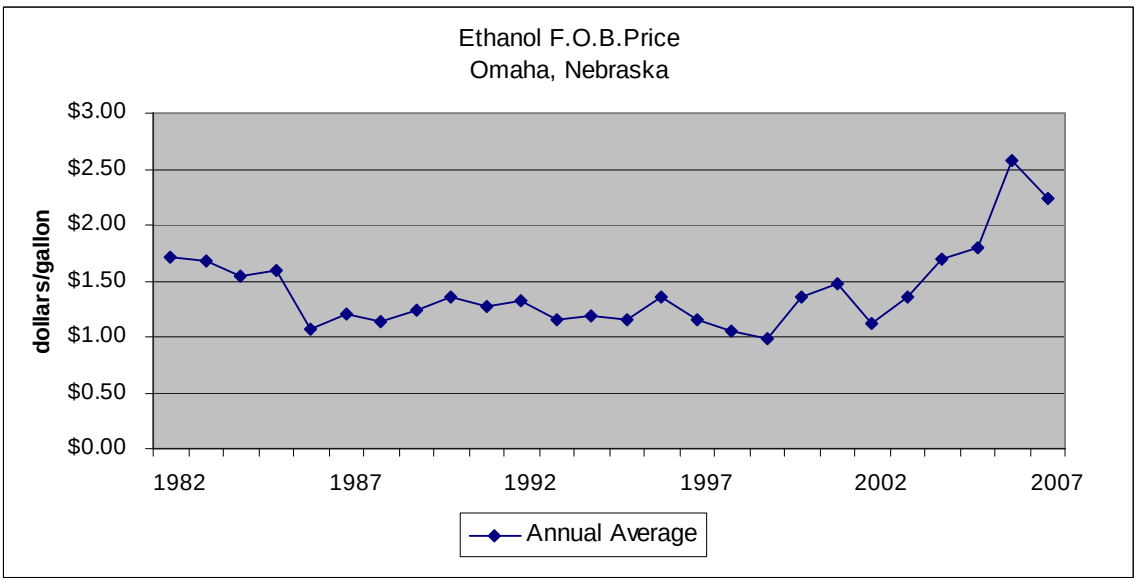

Source of data: Nebraska Energy Office.

There is also uncertainty in the market price of ethanol. The annual average F.O.B. price of ethanol in Omaha, Nebraska during 1982-2006 indicates that the price of ethanol has increased sharply since 2002 (see Figure 2).

With the escalation and increasing volatility of input and output prices investors need to ask, will ethanol investments be as profitable in the future as it has been in the past? More specifically, how will the profitability of producing ethanol be affected by continued market price variability? Does that suggest more caution in the future when making decisions about large investments in ethanol facilities?

Technological Change

Technological change in ethanol production is primarily a question of energy efficiency. Changing technology is driven by increasing input costs and the variability of output prices and also by concerns over environmental impacts. Thus, alternative technologies have been developed to improve the efficiency of ethanol plants. For example, the corn fractionation technology provides corn oil and fiber as byproducts and it increases the efficiency of producing ethanol. There are also technologies to lower the process energy costs by applying alternative energy sources instead of natural gas in dry-milling ethanol plants. For example, corn stover and dried distiller's grains with solubles (DDGS) are possible as economical energy sources for dry-milling ethanol plants. A relevant alternative is using corn syrup extracted from DDGS as a boiler fuel instead of using natural gas. In this research, we study the alternatives of using corn stover and using corn stover-plus-syrup (extracted from DDGS) as boiler fuels in the context of market price uncertainty.

We note that uncertainty related to technology is reflected by changes in input and output prices. Cash flows and present values of cash flows are consequently affected by those price changes, and the result is an option to choose among different technologies. From the perspective of the industry there may also be supply chain or availability uncertainty on the input side, yet we do not propose to consider those additional aspects of the problem here. Thus, for example, we assume that the supply of corn stover will be consistently available if that technology is chosen, as opposed to natural gas. Although the corn stover price we use implies this source of uncertainty to some degree, the

estimation does not directly incorporate concerns over the supply chain or standard quality of inputs.

Objectives

For small-to-medium ethanol producers, those with production capacities less than 60 million gallons, the ability to generate an acceptable rate of return on invested capital is a key objective. As we visited ethanol plants in the Midwest in this size group, plant managers indicated that they are concerned with profitability and are generally aware of the problems that uncertainty about price and changing technology pose when evaluating their investment plans.

We find that the tools and skills used to evaluate ethanol investments tend also to vary widely and there is no "standard model" that is used in the industry for this purpose. On average plant managers and CFOs consider the rate of return on investment (ROI) and the number of years required to get payback when trying to determine if a capital investment project is acceptable. They also work with their lender to determine if the project is financially feasible. At the financing stage the lender typically performs additional financial analysis to evaluate the impact that prices of key inputs (such as corn and natural gas) might have on feasibility. Some managers and chief financial officers use discounted cash flow methods to evaluate investments, but many do not. Also, some use "flat projections" of cash flows with various assumptions about the level of market prices and plant energy efficiency in order to incorporate elements of uncertainty. Also, the length of cash flow projections (the planning horizon) may vary depending on whether it is a new "greenfield" investment (e.g., 5-6 years) or an investment to modify an existing plant (e.g., 8-10 years).

Sensitivity analysis is typically used by managers to focus on profit margins under different price assumptions in order to model the variation in future ROI. Yet, there is no volatility analysis. The sensitivity analysis that is performed is helpful to analyze the expected return at different projected levels of profitability and efficiency. Probabilities could be assigned to these scenarios to give a more complete picture of the risks that are present, but it is not clear that such probabilities are used in the analysis that is typically done. There is a good reason to go beyond the level of investment analysis that is

currently used by many in the ethanol industry, given the large capital outlay that is required and the level and variety of risks that are inherent in the industry.

Thus, the purpose of this report is to produce new knowledge about how option value affects the decision to invest in ethanol facilities. We do this by reviewing the basic concepts and tools of investment and real option analysis. Option value is shown to arise from uncertainty about project cash flows which derives from uncertain market prices. Our first objective is to start with a net present value approach and then introduce real option analysis to evaluate ethanol plant investments using historical industry data. We focus on two real option problems that are faced by small-to-medium dry milling plants - the option to expand and the option to choose among different production technologies. Our second objective is to formulate general recommendations for ethanol facility investors and suggest why real option analysis is useful.

Organization of the Study

In section II we review the basic concepts of investment analysis and the real option approach. In section III we review the data and methods that are used to derive the project cash flows and model parameters. In section IV we review the results for two option analyses – the option to expand capacity and the option to choose among competing plant technologies. In section V we draw some conclusions from the study.

Generally, we present the concepts and empirical findings of the study in the main text with relatively few equations or theoretical discussion. Additional explanatory equations and technical information is placed in the appendices.

II. Net Present Value and the Real Option Approach

Uncertainty about the financial outcomes of long term investment projects is a pervasive problem. It characterizes the future net cash flows from investment projects and places a premium on the flexibility that management needs to have in order to deal with the uncertainty. A real option approach is used to identify the sources of uncertainty and estimate the value of that uncertainty based on future expected returns. For this purpose we define a "real option" as the right, but not the obligation, to make an investment decision for a project with an uncertain rate of return. For an ethanol plant, if the future returns of the asset are known with certainty, or if there are no managerial flexibilities to deal with uncertain returns, a real option would not exist. Starting with the net present value, discounted cash flow method, we will see that a real option analysis may improve investment decisions under conditions of uncertainty.

Net Present Value Method

The finance literature suggests that decision makers use the net present value (NPV) method to analyze capital investment decisions (Ross, et al., 2006). For example, if an investor plans to build an ethanol plant, the future cash flows (CFs) of the plant would be projected using historical prices and operating information about the plant design. In the simplest case, the NPV of a project at the beginning of its lifetime is calculated by summing the discounted future cash flows

$$NPV = \sum_{t=1}^{T} \frac{CF_t}{(1+r)^t} + \frac{DCF}{(1+r)^T} - X \qquad (1)$$

and subtracting the initial investment outlay. In (1) CF_t represents the series of project annual cash flows (t = 1, 2, …, T), T is the expected plant life, r is the appropriate discount rate (or hurdle rate) for project cash flows, X is the initial investment or construction cost of the project at time 0, and DCF is the disposal cash flow from the project assets at the end of period T, when the project is terminated.

The NPV method can be used to calculate the profitability of an investment under different assumptions about the cash flows, the discount rate, or any of the factors that

influence those variables. In this "certainty" framework the annual cash flows and the disposal cash flow are assumed to be known. A positive NPV indicates that the project is profitable under the assumed conditions, and it should be accepted. Thus, the NPV method can be used to evaluate project profitability. However, the NPV method is "static" in the sense that the investment decision is treated as a "once and for all" decision. It makes no provision for changing conditions (due to the uncertainty of project cash flows) which could affect the NPV result. Some investment approaches would have the analyst simply adjust the discount rate upwards to represent the higher level of risk due to cash flow variability. Yet, that approach to NPV analysis also has additional drawbacks and it does not get at the main issue being addressed here – that of management flexibility, which evolves over time and may be quite valuable to investors in the ethanol industry.

Real Option Analysis

Real option analysis is used to model managerial flexibility – the ability to change the investment decision as time evolves and economic circumstances change (Dixit and Pindyck, 1994). The flexibility to make different decisions has its value and market risks, as indicated by volatility of input and output prices, will affect this value due to the potential to profit from the movement of prices. By the traditional NPV method, an investor would exercise the option to invest if the NPV of an asset is a positive value. Thus, he or she might have ignored the value of waiting until market uncertainty is resolved. As we will see, the real option approach makes project profitability a function of uncertainty and timing. Real option analysis does not tell the investor how long to wait, but it does indicate under which conditions an investor should not execute the investment and if waiting for uncertainty to be resolved has value.

In practice several types of real options may exist: the option to start or stop a project, the option to expand or contract a project, or the option to adopt a new technology. For the purpose of our analysis, we will treat the option to adopt a new technology as similar to an expansion option, even though there may be (in reality) a discount relative to the cost existing facilities. Thus, we will set the cost of an expansion

equal to the cost of new construction. This approach simplifies the analysis of the decision to adopt a new technology without significantly affecting the empirical results.

Binomial Option Pricing Model

One method of valuing real options is similar to that of valuing financial options on exchange-traded common stock. To do this we can use the binomial option pricing model (BOPM). The BOPM gives an intuitive structure to the valuation of a real option. It starts with the calculation of the NPV of a project and then considers the additional (option) value that volatility of cash flows add to the NPV for the investor. Using this approach we can build "binomial trees" for project cash flows and option values, and use these calculations to determine the best decision given the uncertainty of the cash flows.

The BOPM assumes that the investment decision can be valued as an American option. In American options, there is an expiration date for the ability to execute the option. Before the expiration date, the investor has the flexibility of exercising the option to buy or sell, or continue to hold the option (Hull, 1997). That is, the action of investment is deferrable before a certain date and the option has its own price (the option value) due to the volatility of the expected project cash flows from the underlying asset.

In real option analysis, we assume that the value of the underlying asset is uncertain and that it will follow a "random walk" over time. At each point of time the asset value will either move up or down – it is binary, since it has only two directions in which to move from one period to the next. To implement the BOPM we will use the risk-neutral probability approach (RNA), which is based on modeling the probabilities of events and where investors are assumed to make decisions based on their assigned "risk neutral probabilities."

To determine the option values by RNA we first need to establish the binomial tree of underlying asset values. For ease of exposition, let us take a three-period start-up option as an example, even though several additional periods are implied. That is, the investor plans to start a new project and has the right to start it any time before period 3. Thus, it is evaluated as an American call option.

Figure 3. A Representative Binomial Tree of Underlying Asset Values

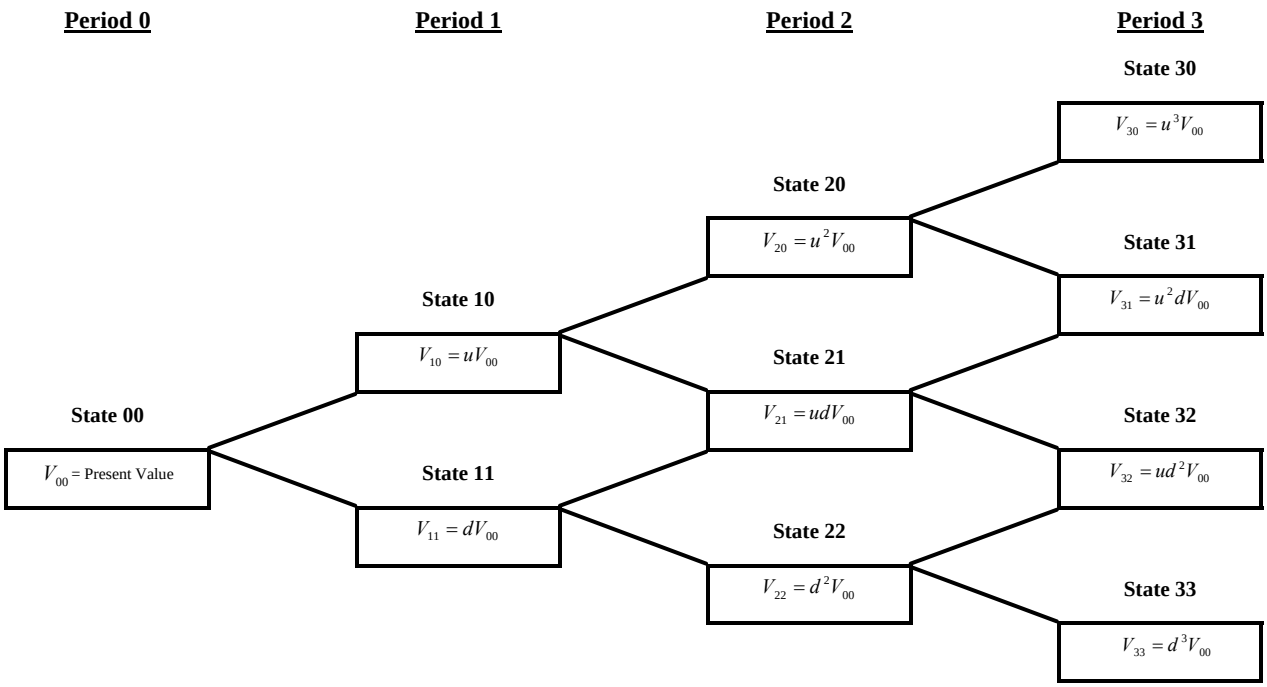

Starting from the initial period (0), the real asset value has three periods to go until the project is either terminated or the option expires. We let *i* denote the period and *j* denote the outcome at each period, then the asset value at state *ij* (*i*, *j* = 0, 1, 2, 3) is denoted by V_{ij} (see Appendix equation A.3) as shown in Figure 3. At State 00, V_{00} is the initial value of the asset and it is determined by equation B.15, which is just the present value of the asset at the initial period. The constants *u* and *d* denote the up-factor and down-factor, respectively. These factors are also defined in Appendix A. The up-factor and down-factor are determined by the volatility and the length of time interval between each period.

Following period 0, there will also be two outcomes for the real asset value at each subsequent node of the binomial tree. Hence, this is commonly called a "two-state model." That is, the asset values at each node will either increase by a proportion *u* or decrease by a proportion *d* in the next period. For example, from period 0 to period 1, the changing path of the asset value can be either from V_{00} to uV_{00} or from V_{00} to dV_{00}. From period 1 to 2, there are also two paths for uV_{00} and dV_{00}, respectively. That is, if

the asset value achieves the level of uV_{00} at period 1, then there are two paths for uV_{00} to follow in the next period. The same procedure applies if the asset value achieves the level dV_{00} in period 1. If we go from period 0 to period 2, there are actually $2^2 = 4$ possible paths for the asset value to take.

Figure 4. A Representative Binomial Tree of Option Values

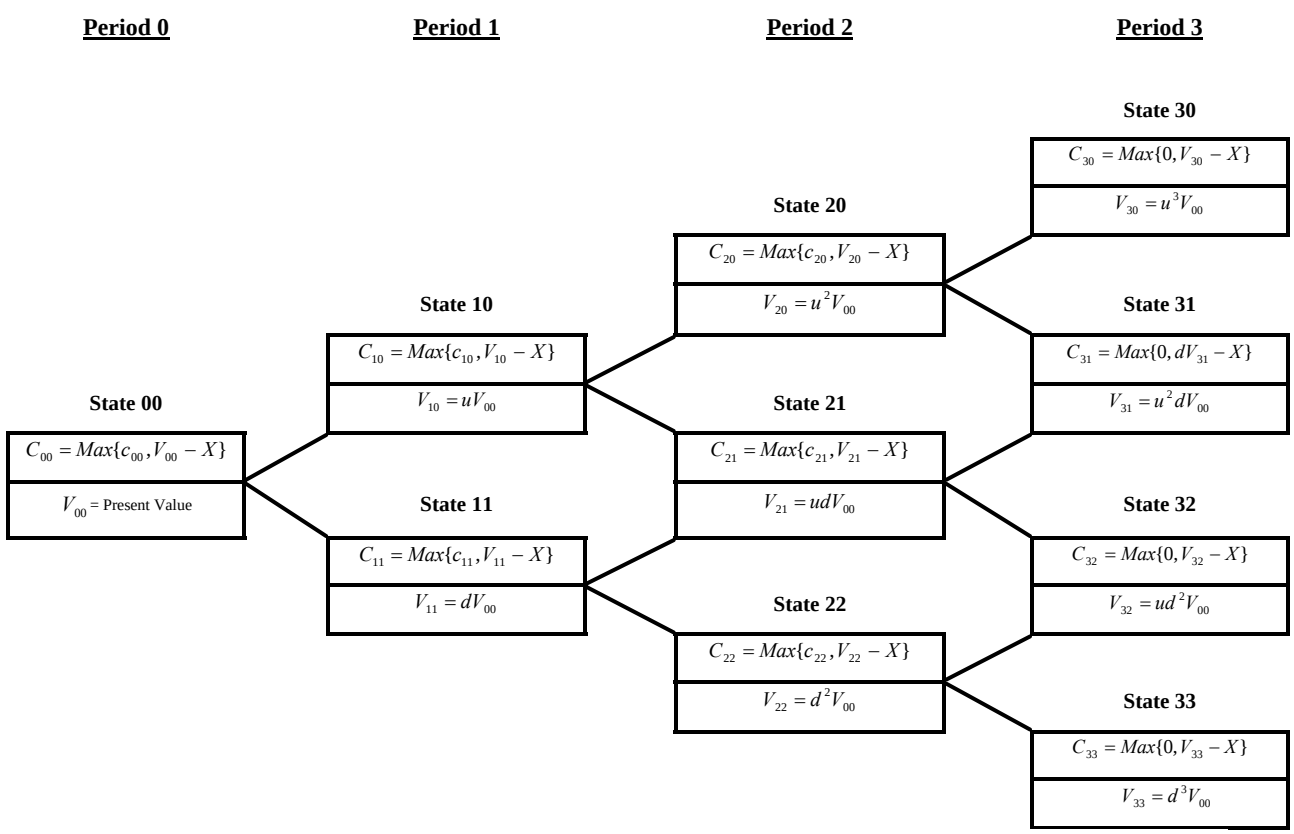

Based on the binomial tree of asset values in Figure 3, we can establish a binomial tree of option values as in Figure 4. Using the BOPM, we need to work backward in time starting from the last period (period 3) to determine the option values. If we let C denote the option value at period 3, then C is determined by the maximum function

$$C = Max\{0, V - X\} \tag{2}$$

where V denotes the value of the underlying asset at a given state (A.3), and X denotes the exercise price of the project. In real option analysis, we assume that X is the initial investment cost of the project and that it is constant throughout the life of the option, regardless of variations in the market value of the underlying assets.

In Figure 4, there is a box at each "state" for a given period where states represent the set of uncertain outcomes in each period. Embedded in the upper-level of each box is the option value by RNA and embedded in the lower-level of each box is the value of the underlying asset. As we can see in Figure 4, the option values (in periods prior to the expiration period of the call option) are determined by the maximization function

$$C = Max\{c, V - X\} \tag{3}$$

where c is the "value of waiting" to make the investment. The value of waiting at state ij (i, j = 0, 1, 2, 3) is determined by

$$c_{ij} = R_f^{-1}(p_u C_{i+1j} + p_d C_{i+1j+1}) \tag{4}$$

We note that in (4) $R_f = 1 + r_f$, and $R_f^{-1} = 1/(1+r_f)$. The RNA assumes that at each state in the binomial tree, the option value has the probability p_u that it will increase in the next period and the probability p_d that it will decrease in the next period. Namely, p_u is the up-probability and p_d is the down-probability. These two important probabilities are also discussed in Appendix A. The up-probability and down-probability are also known as the "risk-neutral probabilities," since their values are determined by the up-factor, the down-factor, and the risk-free interest rate. Therefore, the value of waiting at state ij can be interpreted as the expected present value. It is the option value in period i+1 (at the up-state and down-state, respectively) weighted by the risk-neutral probabilities (p_u and p_d), and discounted by the risk-free rate of return. For example, the value of waiting at state 20 is $c_{20} = R_f^{-1}(p_u C_{30} + p_d C_{31})$.

III. Data and Model Parameters

In this section we discuss the methods used to implement real option analysis of ethanol plant investment decisions. We discuss the primary assumptions that are used in the model and the methods used to simulate the cash flows of a hypothetical ethanol plant. Simulation is used to conduct the analysis since individual plant data could not be obtained. But the simulation approach provides some advantages, since it allows us to investigate how the investment decision responds to alternative price scenarios. Much of the technical description related to this section is found in Appendix B.

We start by discussing how the parameters of the binomial option pricing model are derived when applying the model to the ethanol plant investment problem. Two key parameters are the volatility (σ) and the risk-free interest rate (r_f).

Volatility

Volatility generally refers to the uncertainty of the return realized on an asset (Hull, 1997). It is a key parameter in real option analysis, since it is the basis for option value to exist. In this study, the initial value of the underlying asset is set equal to the present value (PV) of the ethanol investment project. The initial PV is equal to the sum of the discounted annual cash flows (CF) over the project life plus the discounted disposal cash flow (DCF) of the project assets at termination (as shown in equation B.15 in Appendix B). We assume for simplicity that the disposal cash flows are a known, fixed proportion of the initial investment cost of the asset. Therefore, disposal cash flows do not affect the volatility of the project cash flows. Note that in the BOPM the asset value after the initial period will no longer be determined by the NPV approach as in equation B.15. It is determined by the initial asset value and the up and down factors u and d. In turn, the up and down factors are determined by volatility of PV, so volatility also reflects the uncertainty of the PV of the cash flows of the asset. In the BOPM, a higher volatility statistic indicates that the investor expects a higher degree of variation of the annual return and, therefore, higher risk. With lower volatility, an investor expects lower variability and lower risk.

In order to illustrate the real option approach for a conventional ethanol plant, we will simulate the cash flows of an ethanol plant during January 2001 - August 2007. In

place of actual plant-level data, we use the simulated cash flow per gallon (CFG) as shown in Figure 5 to illustrate the different patterns of cash flows. We note that the cash flows in different subperiods during this time interval appear to have different variability. We also assume a constant production level (50 mm gallons per year) throughout the plant life, so the volatility measurements will not be affected by production level. That is, for a given technology, the CFG has the same volatility as total cash flow (CF) of the facility and the present value of cash flow per gallon (PVG) has the same volatility as total PV of the ethanol facility. The CF and PV are both on an annual basis. In Appendix B, we discuss in more detail how the CFG and PVG values are simulated and how the volatility of PVG is estimated.

Figure 5. Simulated Cash Flows for a Conventional Ethanol Plant, 1/2001-8/2007

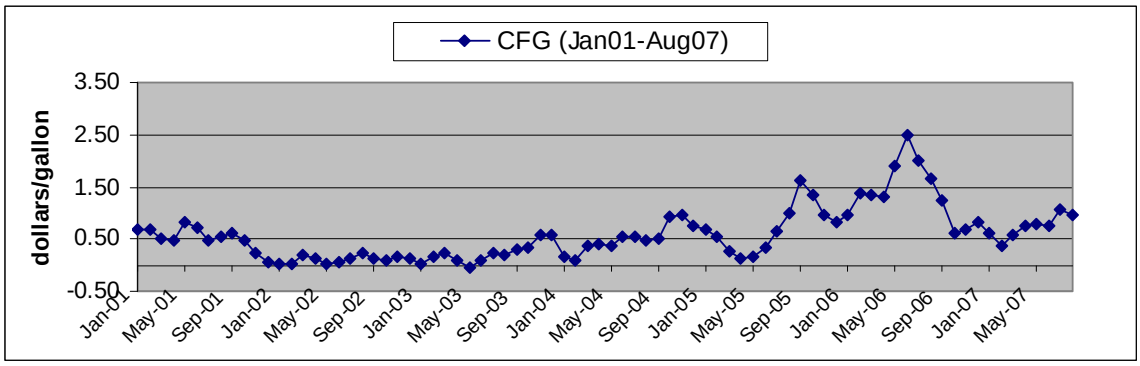

In Figure 5 we can see that the CFG series during January 2005 - August 2007 appears to be more variable than the CFG before this period. The entire period includes January 2001 - August 2007. The first subperiod includes May 2002 - December 2004. The second subperiod includes January 2005 - August 2007, which captures an era in which ethanol plant capacity has escalated at a relatively more rapid pace.

Risk-free Interest Rate

To estimate the risk-free interest rate r_f, we use the historical interest rate for 3-month U.S. Treasury bills.[1] Treasury bills are short-term securities issued by the U.S.

[1] Consistent with previous real option analyses (Copeland and Antikarov, 2003), we use the interest rate for short-term U.S. Treasury bills. Various long-term U.S. Treasury bond rates might also be considered.

government as debt financing instruments. Treasury bills have maturities of one year or less. In the real world, the interest rate on a short-term Treasury bill carries minimal credit risk, so it is considered to be "risk-free." We use the average of annual interest rates of 3-month U.S. Treasury bills during 1982-2006 because it is more likely to reflect the expected interest rate. In our real option analysis, the base model uses historical prices from 2001-2007, so it is reasonable to use the 17-year average rather than an average for a longer time period. Thus, the risk-free interest rate used in the model is 4%.

Figure 6. Procedure Used to Calculate Volatility of Present Value/Gallon (PVG)

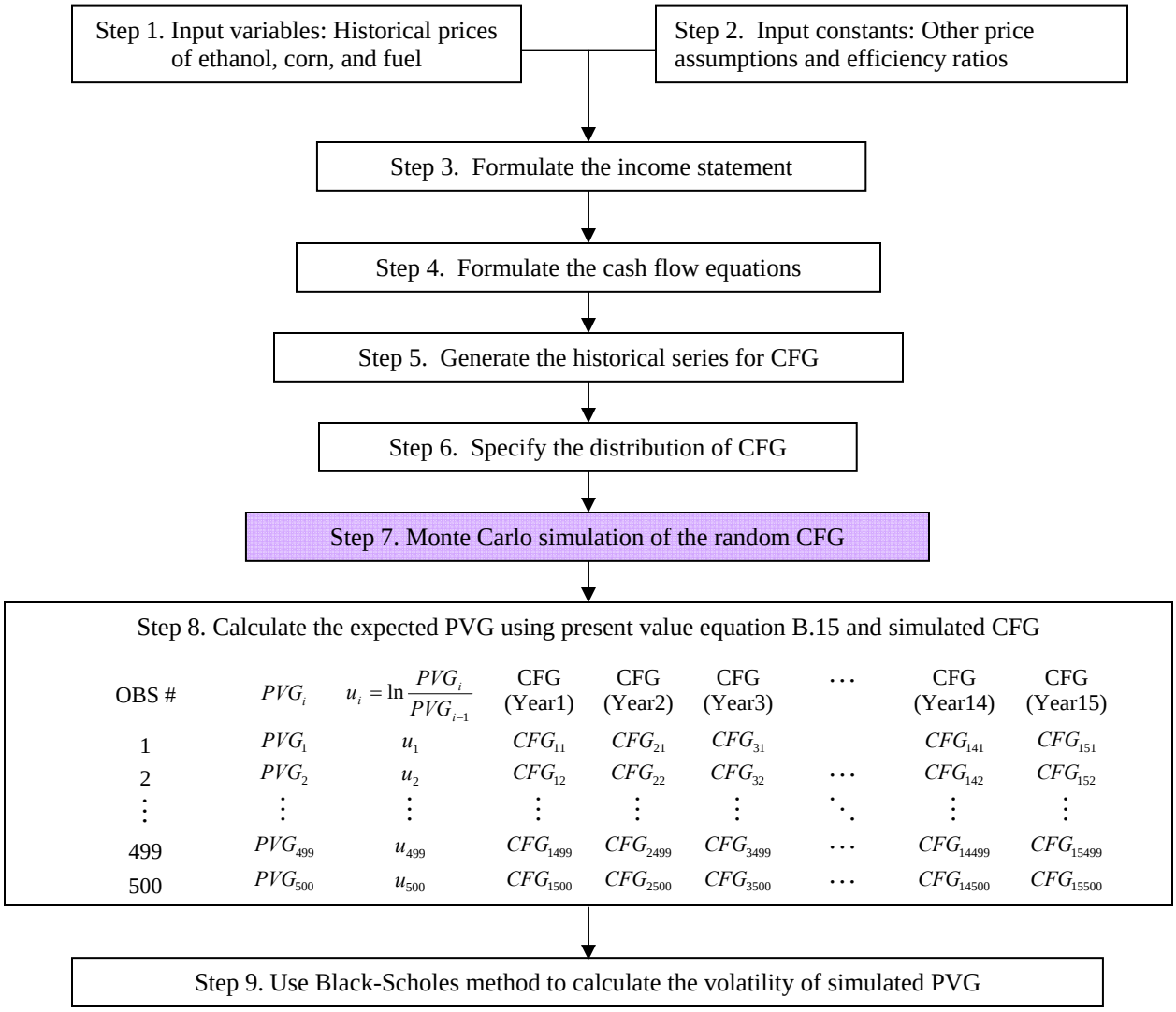

Cash Flows

To estimate the volatility of the expected PV on an ethanol project, we need to determine the expected CF from the ethanol plant investment. There are three different types of combustion technologies for a corn-based, dry-milling ethanol plant: 1) conventional technology which uses natural gas for combustion, 2) a technology that uses corn stover for combustion - "stover" and 3) a technology that uses corn stover and syrup for combustion - "stover-plus."

As described more fully in Appendix B, we use Monte Carlo simulation to generate the cash flows of the ethanol plant investment project. The simulation model is used also to calculate the corresponding present values of cash flows per gallon (see Figure 6). In steps 1-5 we generate the historical cash flows for a given ethanol production technology. We assume that the historical prices of ethanol, corn, and fuel are variables and other costs and prices are constants. The cash flow equations in step 4 for each type of technology are described more completely in Appendix B. Since all costs and prices are in dollars per gallon of ethanol production, we use conversion efficiency ratios to calculate the coefficients of the three key variables. For example, if we know the conversion ratio from corn to ethanol, then the coefficient of the corn price variable (in step 4) is just equal to this conversion ratio. Using the cash flow equations, we can calculate the generated historical cash flows per gallon (CFG) in step 5. In step 6 we use an Excel spreadsheet tool (@Risk) to fit distributions to the generated CFG. @Risk is also used to perform the Monte Carlo simulation in step 7. It is used to generate random draws for the CFG in each year of the plant life (as shown in step 8). The present value equation in step 8 and the BSM method in step 9 are discussed in Appendix B.

When estimating the CFG, we treat ethanol price, corn price, and fuel prices as uncertain variables. Since the historical price of corn stover is not available we use the distributional assumption for corn stover price provided by Petrolia (2006) and simulate the historical price series for stover. Other prices, costs, and efficiency ratios are assumed to be constant, based on historical averages and assumptions from related studies. A summary of other assumptions is reported in Table B.1 in Appendix B.

Table 1. Summary of the Model Parameters

Parameters	Conventional	Conventional I a/	Conventional II b/	Stover	Stover-plus
Distribution of CFG/CF	Normal	Normal	Normal	Normal	Normal
Mean CFG	$0.59	$0.31	$0.96	$0.68	$0.66
Standard deviation of CFG	$0.50	$0.26	$0.55	$0.55	$0.54
Volatility of PVG/PV	33.13%	31.42%	21.52%	30.84%	31.38%
Up-factor, u	1.39	1.37	1.24	1.36	1.37
Down-factor, d	0.72	0.73	0.81	0.73	0.73
Up-probability, p_u	47.72%	48.47%	53.86%	48.73%	48.49%
Down-probability, p_d	52.28%	51.53%	46.14%	51.27%	51.51%

a Estimates are based on prices in subperiod I (May 2002 - December 2004)
b Estimates are based on prices in subperiod II (January 2005 - August 2007)

In Table 1 we summarize the key parameters for each technology and each subperiod. For ease of discussion of the method of analysis we decided to assume that all cash flow distributions are normal. This implies that the PVG is also normally distributed. The normal distribution was one of a small set of alternative distribution types that fit the historical data reasonably well, although there was some variation in the best fit distribution type between technologies.

As discussed in Appendix A, the up and down factors and the corresponding risk-neutral probabilities reported in Table 1 will vary between technologies primarily due to differences between the estimated volatilities of the PVG distributions. Variations in the subperiod volatilities of PVG for the conventional technology also explain why the up and down factors and the risk-neutral probabilities vary between the conventional, conventional I, and conventional II scenarios. All the parameters in Table 1 appear to be reasonable estimates to use in our examples.

Note that in Table 1, the distribution type for total annual cash flows (CF) is the same as the distribution type of cash flows per gallon (CFG). This is because we are assuming constant total production of ethanol. Also note that the expected volatility of present value (PV) of the asset is the same as that of the present value per gallon (PVG).

IV. Results

In this section we review the results from applying NPV and the binomial option pricing model to two real options – the option to expand the scale of a conventional plant, and the option to choose among alternative dry-milling process fuel technologies.

The Option to Expand a Conventional Plant

The base model used to illustrate real option analysis is an ethanol plant with 50mm gpy production capacity using a dry milling process and producing 100% dried distiller grains with solubles (DDGS) as the byproduct. We assume that by the end of year 5 of plant operation, the investor needs to decide if the plant should be expanded to a 65mm gpy starting in year 6. The alternative decision is to postpone the investment until one-year later when more favorable market conditions could develop or the uncertainty is resolved. We also assume that the expanded production facility will last for 6 years. The initial investment (which we will call the exercise price, *X)* for a conventional ethanol plant is $2.25/gallon,[2] so the total initial investment of the expansion project is $2.25/gallon*15 million gallons (= $33.75 million). The expectation of conventional CFG is $0.59/gallon (B.8), so the expected CF for the 15 mm gpy expansion is $0.59*15 million gallons (= $8.84 million). Assuming the disposal cash flow (DCF) of the assets is 15% of the initial investment, the DCF equals $5.06 million. Then (by equation B.15 in Appendix B), the initial value of the project (before subtracting the initial investment cost) is

$$
\begin{aligned}
E(PV) &= \sum_{t=0}^{6} \frac{E(CF_t)}{(1+r_f)^t} + \frac{E(DCF)}{(1+r_f)^6} \\
&= \left(\frac{\$8.84}{1.04^0} + \frac{\$8.84}{1.04^1} + \frac{\$8.84}{1.04^2} + \frac{\$8.84}{1.04^3} + \frac{\$8.84}{1.04^4} + \frac{\$8.84}{1.04^5} + \frac{\$8.84}{1.04^6}\right) + \frac{\$5.06}{1.04^7} \\
&= \$57.06 \qquad (million)
\end{aligned}
$$

[2] The construction cost for building a new conventional ethanol plant is used, although in practice there may be a discount relative to existing facilities.

Figure 7. Binomial Tree of Asset Present Values with Volatility, Conventional Expansion

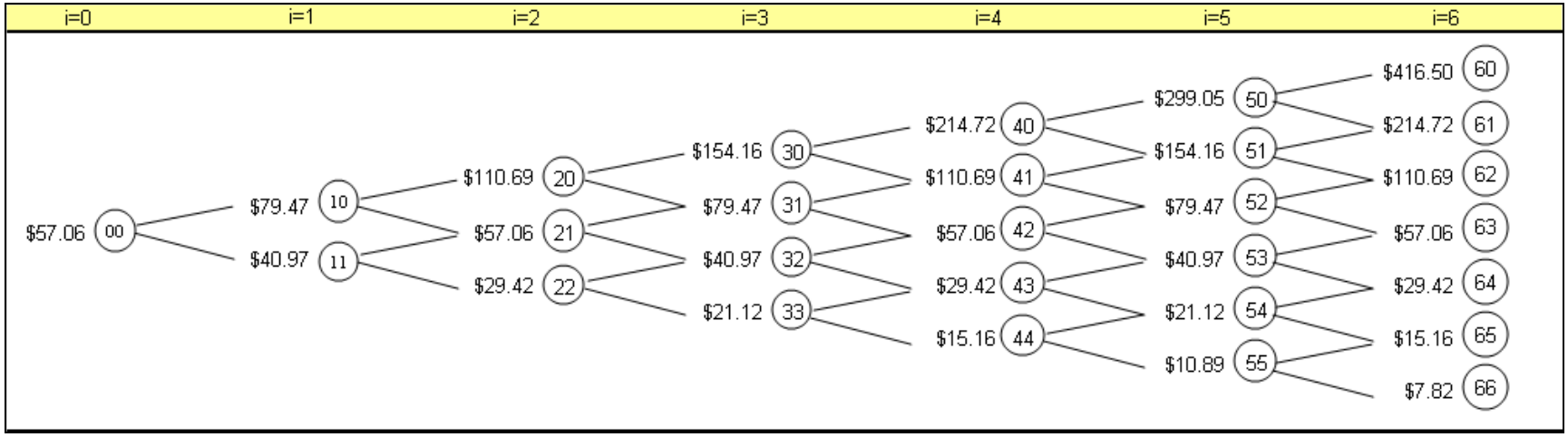

Figure 8. NPVs for the Conventional Expansion

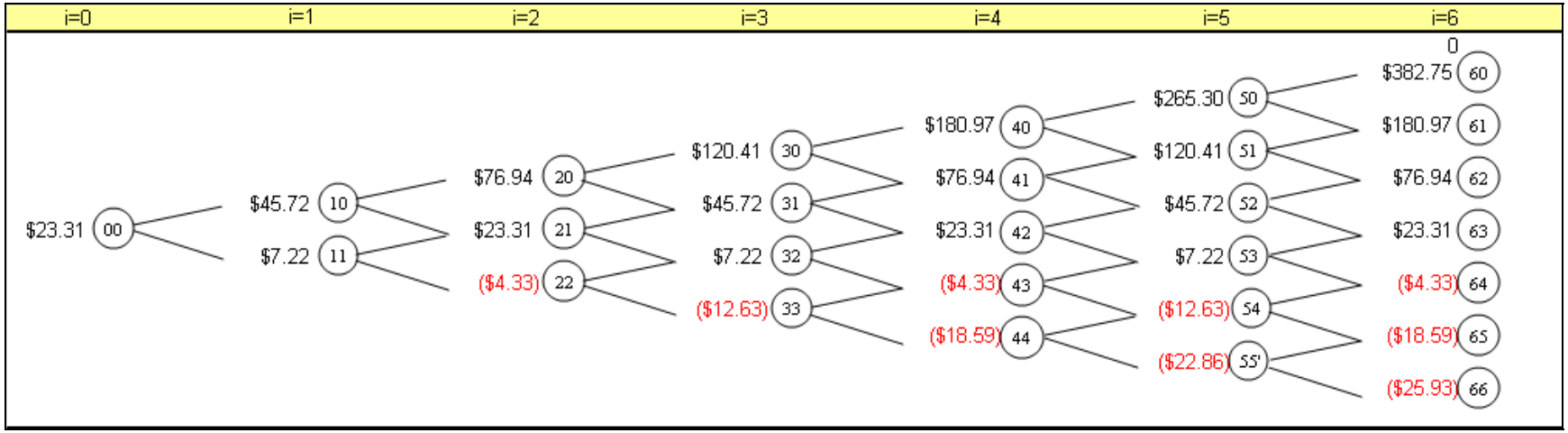

Figure 9. Option Values and Strategies for Conventional Expansion

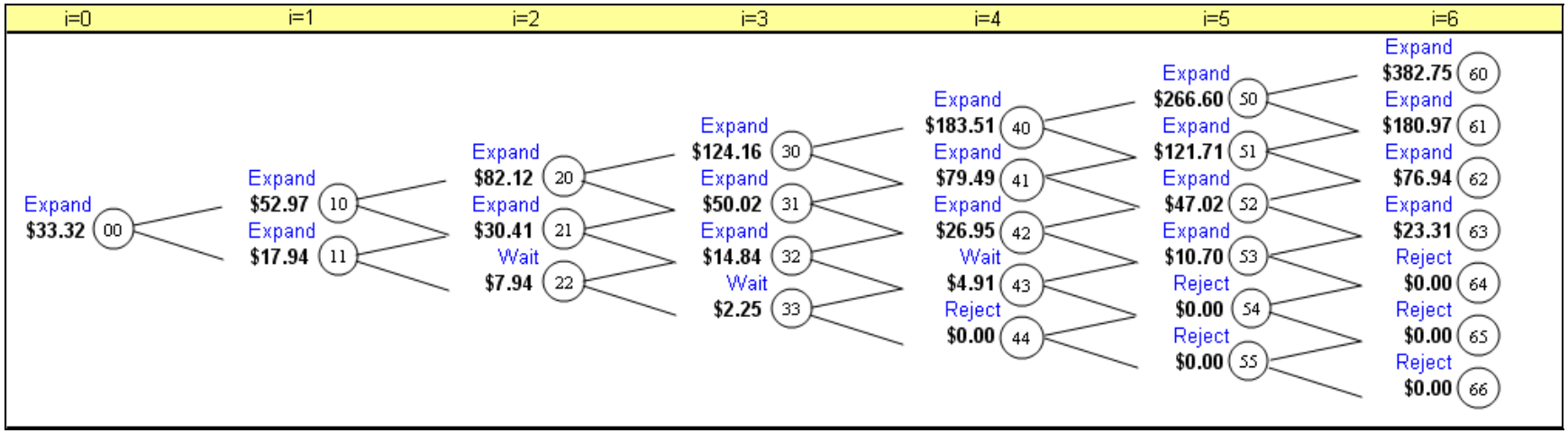

Based on the up-factor (1.39) and the down-factor (0.72) in Table 1, we can generate the binomial tree of asset values in Figure 7. For example, we can calculate the asset values at nodes 10 and 11, since we know that they are determined by the initial asset value, V_{00}, and the up and down factors. Thus,

$$V_{10} = uV_{00} = 1.38(\$57.06) = \$79.47 \ \ (million)$$
$$V_{11} = dV_{00} = 0.72(\$57.06) = \$40.97 \ \ (million)$$

The NPV of the project at a given node is calculated by using equation A.8 in Appendix A. The resulting binomial tree of NPV is given by Figure 8. For example, the NPV at nodes 10 and 11 are given by

$$NPV_{10} = V_{10} - X = \$79.47 - \$33.75 = \$45.72 \ \ (million)$$
$$NPV_{11} = V_{11} - X = \$40.97 - \$33.75 = \$7.22 \ \ (million)$$

The next step is to calculate the option values at each node by using equations A.6 and A.7 in Appendix A. The resulting binomial tree of option values is given in Figure 9.

At each node of the binomial tree, the best strategies to undertake are given by a set of decision criteria, as summarized in [CR1] through [CR5].

In each period before expiration (when i < T and j < T), [CR1], [CR2] and [CR3] apply.

[CR1]: If $NPV_{ij} = V_{ij} - X > 0$, the NPV is positive, so the project is accepted.

[CR2]: If $c_{ij} = R_f^{-1}(p_u C_{i+1j} + p_d C_{i+1j+1}) > 0 > NPV_{ij}$, the value of waiting is larger than zero while the NPV is negative, so the best strategy is exercise the option to wait another period.

[CR3]: If $Max\{c_{ij}, NPV_{ij}\} = 0$, the maximum of the value from waiting and the NPV are both zero, so the best strategy is to reject the option to invest.

At expiration (when i = T), **[CR4]** and **[CR5]** apply.

[CR4]: If $NPV_{ij} > 0$, the NPV is positive and the project is accepted in period i.

[CR5]: If $NPV_{ij} < 0$, which means the NPV is negative, and the investment is rejected in period i.

For example, the option value at node 60 is given by

$$C_{60} = Max\{0, V_{60} - X\} = Max\{0, \$416.50 - \$33.75\} = \$382.75\, million$$

The option value at node 61 is given by

$$C_{61} = Max\{0, V_{61} - X\} = Max\{0, \$214.72 - \$33.75\} = \$180.97\, million$$

Next, to determine the option value at node 50, we need to work backward from period 6 to period 5 and use the values for C_{60} and C_{61}:

$$\begin{aligned} C_{50} &= Max\{R_f^{-1}(p_u C_{60} + p_d C_{61}), V_{50} - X\} \\ &= Max\{0.96[48.72\%(\$382.75) + 52.28\%(\$180.97)], \$299.05 - \$33.75\} \\ &= Max\{\$266.60, \$265.30\} \\ &= \$266.60 million \end{aligned}$$

The strategy at node 50 is to expand[3] since the NPV at this node is $265.30 million, which is positive (i.e., $NPV_{50} = V_{50} - X > 0$). If we look at node 54 in the same period, we find that the option value is zero and real option analysis indicates rejection of the project. This is because the value of waiting at node 54 is zero and NPV_{54} is negative:

$$\begin{aligned} C_{54} &= Max\{R_f^{-1}(p_u C_{64} + p_d C_{65}), V_{54} - X\} \\ &= Max\{0.96[48.72\%(\$0) + 52.72\%(\$0)], \$21.12 - \$33.75\} \\ &= Max\{\$0, -\$12.63\} \\ &= \$0 \end{aligned}$$

According to criterion **[CR5]** if the outcome at node 54 occurs (a zero value of waiting and a negative NPV), then the best strategy is to reject the project and there is no value of waiting.

Scenario Analysis for the Conventional Expansion Option

Recall that in Figure 5, the CFG appears to exhibit lower volatility in subperiod I (January 2001 - December 2004) and higher variation in subperiod II (January 2005 -

[3] As a matter of fact, when both the value of waiting and the NPV of the asset are larger than zero, the investor has the flexibility to either wait until next period or invest in the current period. So at this node 50, the investor may also wait instead of executing the expansion.

August 2007). In Table 1 we also report the volatilities of PV based on the historical CF values for these two subperiods.

Subperiod I (January 2001-December 2004): The volatility of PV for subperiod I is 31.42% (see Table 1). Based on the price history in subperiod I, the expected annual CF from a 15-million gallon expansion of a conventional plant is $4.61 million (based on equation B.10 in Appendix B). Using equation B.15 in Appendix B the initial value of the expansion project is

$$
\begin{aligned}
E(PV) &= \sum_{t=0}^{6} \frac{E(CF_t)}{(1+r_f)^t} + \frac{E(DCF)}{(1+r_f)^6} \\
&= \left(\frac{\$4.61}{1.04^0} + \frac{\$4.61}{1.04^1} + \frac{\$4.61}{1.04^2} + \frac{\$4.61}{1.04^3} + \frac{\$4.61}{1.04^4} + \frac{\$4.61}{1.04^5} + \frac{\$4.61}{1.04^6}\right) + \frac{\$5.06}{1.04^7} \\
&= \$31.66 \qquad (million)
\end{aligned}
$$

So, the initial value of the project V_{00} is $31.66 million. For subperiod I, the up-factor is 1.37 and the down-factor is 0.73. Following the same steps as used for the conventional plant expansion, we can build a binomial tree for the asset present value using equation A.3 in Appendix A. The exercise price of this project is $33.75 million, so we can also establish a binomial tree of net present values for the expansion, using equation A.8 in Appendix A. Next, by using equations A.6 and A.7 in Appendix A, we can determine the option values and strategies at a given node in the binomial tree.

For subperiod I, we report the binomial tree of option values and strategies in Figure 10. Compared with the earlier analysis (in Figure 9) the conventional plant expansion investment is less favorable during subperiod I, as shown in Figure 10. Given the lower expected volatility of PV and the lower expected annual CF, the investor would more frequently either reject the project or wait until a later period to decide.

Subperiod II (January 2005-August 2007): The volatility of PV in subperiod II is actually lower at 21.52%. The corresponding value for the up-factor is 1.24 and down-factor is 0.81. The expected annual CF for this subperiod is higher at $14.39 million and the PV of the expansion project is found to be higher at $93.82 million (by applying equation B.15 in Appendix B). The resulting option values and strategies are reported in

Figure 11. As we can see, the expansion project is quite favorable given the lower volatility and sharply higher present value of the investment project. The strategy at nearly all nodes in the binomial tree is to expand, except for nodes 55 and 66. If we look at node 55, the investor will have about a 54% chance of a positive NPV at period 6 and about a 46% chance of getting nothing from the investment at period 6. Subperiod II provides some evidence that the investment climate in the period 2005-2007 has been quite favorable for ethanol plant expansion projects, and helps explain the rapid increase in ethanol industry production capacity.

Subperiod III (September 2007-April 2008): During the period since August 2007, economic conditions have changed significantly. The price of corn continued to rise from about $3.50/bushel in September 2007 to about $5.77/bushel in April 2008. The price of natural gas also increased from about $6.03/mmbtu to about $9.90/mmbtu during this time. During this period the price of ethanol increased at a relatively slower pace from $1.93/gallon to about $2.59/gallon. The relatively faster rise of cost of inputs relative to the price of ethanol has meant that the profitability of ethanol has declined sharply. Based on our earlier calculations of cash flow per gallon (CFG) of ethanol produced, the expected level of cash flow declined from about $0.96/gallon during 2005-07 to about $0.29/gallon during September 2007-April 2008. The corresponding estimate of volatility of PVG (present value of cash flow per gallon) declined from about 22% (see Table 1) to about 14% during September 2007-April 2008. Thus, expected profitability and volatility have both declined significantly in recent months. What has that meant for industry investment?

The real option model predicts that, as a consequence of this sharp reversal of profitability, the ethanol industry would significantly slow the pace of investments in ethanol facilities. Where the industry was in a rapid expansion mode during 2005-07, the model predicts that the best decision would be to wait on expansion investments and in the binomial model indicates that the plant expansion plans should be rejected in several states of the binomial tree where CFG continues to decline. These model results are quite consistent with the observed slower pace and stagnation of ethanol plant investments during late 2007 - early 2008.

Figure 10. Binomial Tree of Option Values and Strategies, Conventional Expansion (subperiod I)

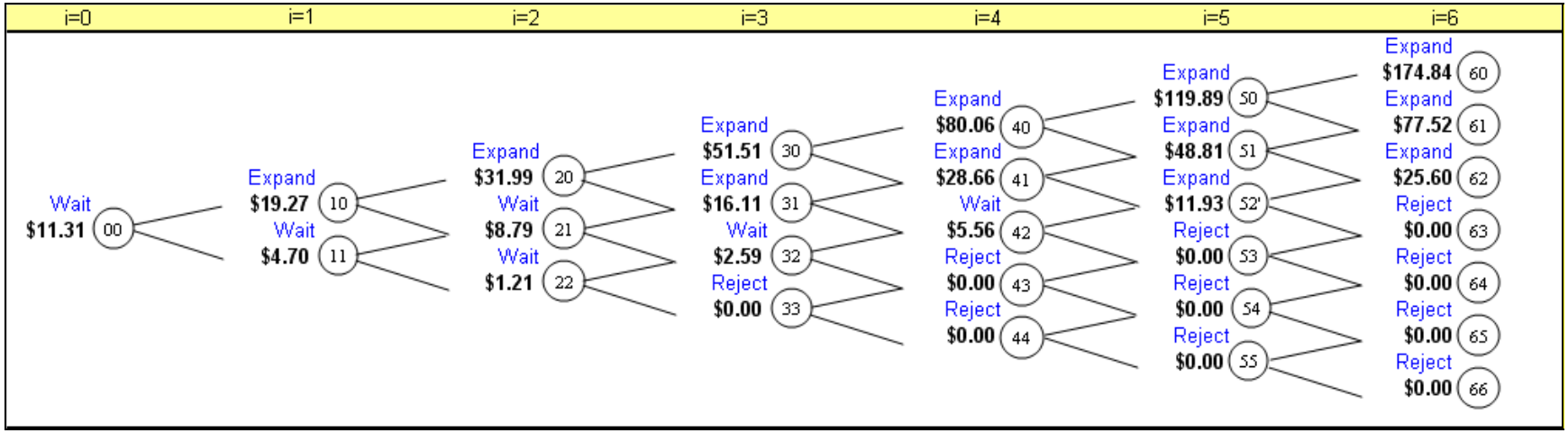

Figure 11. Binomial Tree of Option Values and Strategies, Conventional Expansion (subperiod II)

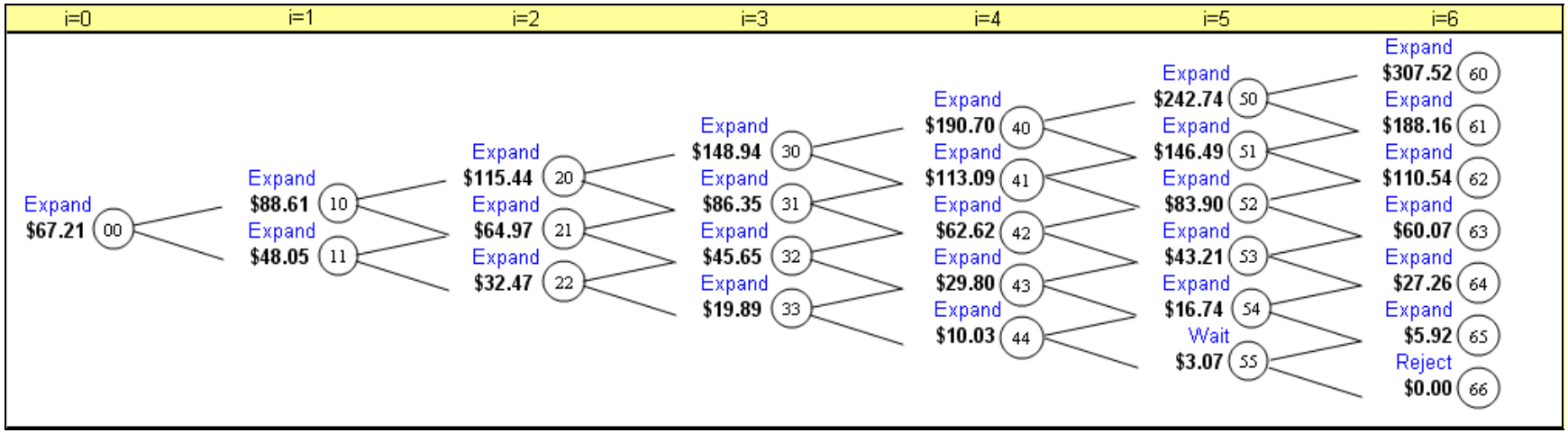

The Option to Choose Stover versus Conventional Technology

Due to the increasing price of natural gas, new combustion technology has been developed to reduce the energy cost of a dry-milling ethanol plant. Corn stover is one of the alternative biomass boiler fuels that reduce energy costs for ethanol investors. The ethanol price, corn price, and annual production assumptions used for the stover plant are the same as for the conventional plant. The other cost and price assumptions for the stover plant are based on the study by De Kam et al. (2007).

Compared with a conventional dry-milling ethanol plant, a stover plant requires higher construction cost, higher electricity consumption and some additional cost for controlling nitrogen emission. Also, a stover plant produces ash as a marketable byproduct and a stover plant uses stover as the combustion fuel, which is a less expensive source than natural gas. Therefore, investors who are interested in corn-based, dry-milling ethanol plants may find corn stover combustion technology to be more appealing. However, uncertainty also exists in the price and cost for a stover plant. The BOPM can be used to value this alternative technology and compare the investment in a stover plant with that in a conventional plant.

The option to choose between a stover plant and a conventional plant is analogous to a switching option, which can be treated as a call option. However, the problem in this case is not a true switching option and it is modeled here as an option to choose one plant technology versus another as a new plant investment not as a technology conversion problem. Essentially, the investor would build a new plant alongside an existing plant and continue to operate both plants (i.e., they would not consider an abandonment option). Thus, we establish the binomial tree of option values for starting a new conventional plant and for starting a new stover plant. We compare the option values in these two binomial trees and evaluate which investment is more profitable. For simplicity, we name the option to choose between conventional and stover as Option CS.

The life of Option CS is assumed to be 6 years and the annual production for either technology is 50 mm gpy. All the other assumptions are the same as in the conventional plant expansion problem, except for the following costs: boiler fuel cost is from use of natural gas for the conventional plant and from corn stover for the stover plant, construction cost, electricity cost, and cost for nitrogen control and the revenue generated

from ash products. The construction cost for the conventional plant is $2.25/gallon and that for the stover plant is $2.94/gallon. The total initial investment costs are $112.50 million for the conventional technology and $147.00 million for the stover technology. The expected CFG for the conventional plant is $0.59/gallon per year and the expected CFG for the stover plant is $0.68/gallon per year. Therefore, the annual total CF for the conventional plant is $29.47 million and for the stover plant it is $33.92 million. Using equation B.15 in Appendix B, we find that the expected present value of the project assets for the conventional plant is $337 million and that for the stover plant it is $389 million. These are the exercise prices for the option to invest in each plant technology.

Figure 12. Present Values of Assets for Starting a Conventional Plant versus a Stover Plant

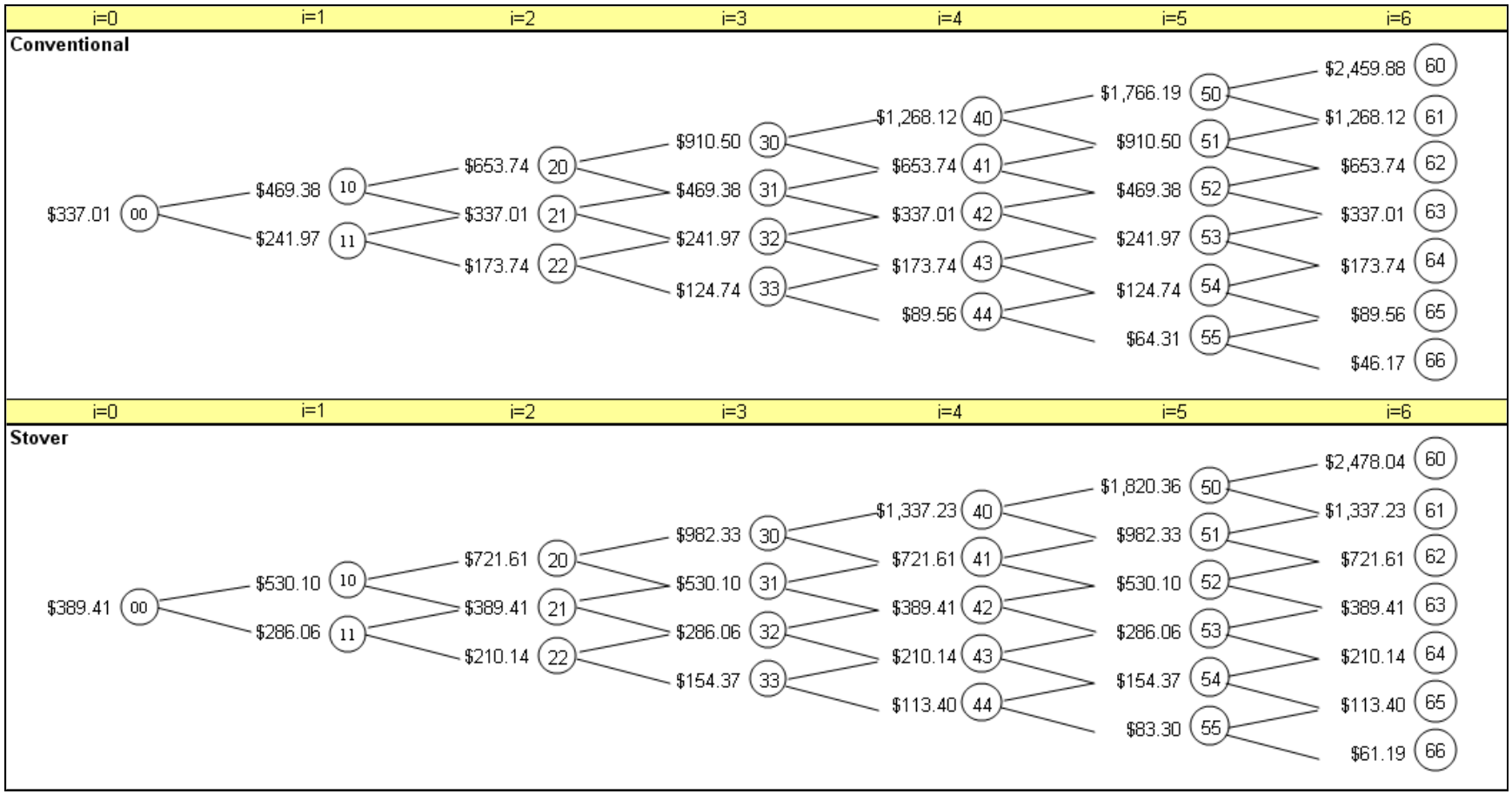

Figure 13. Net Present Values for Starting a Conventional Plant versus a Stover Plant

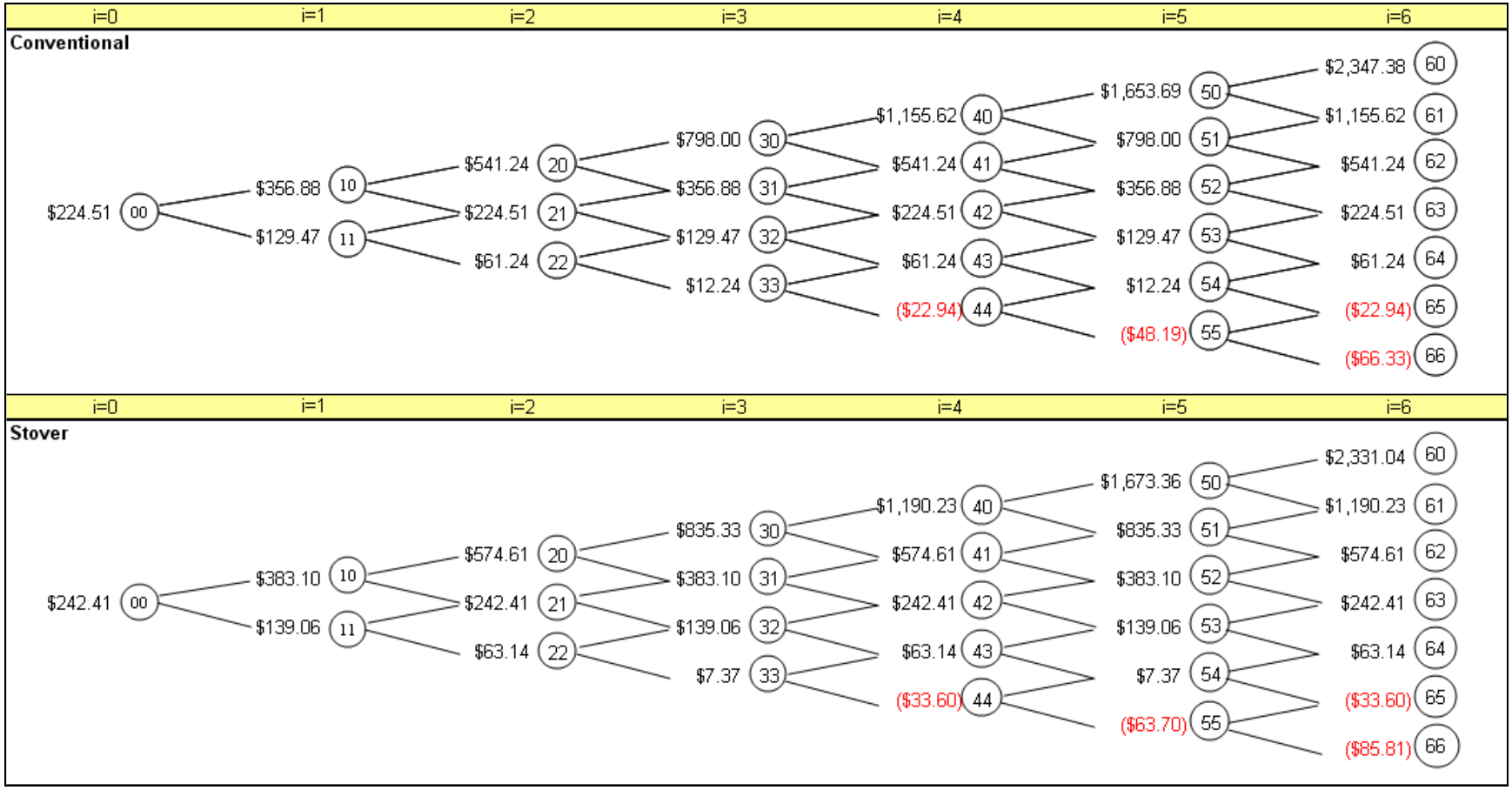

Figure 14. Option Values for Starting a Conventional Plant versus a Stover Plant

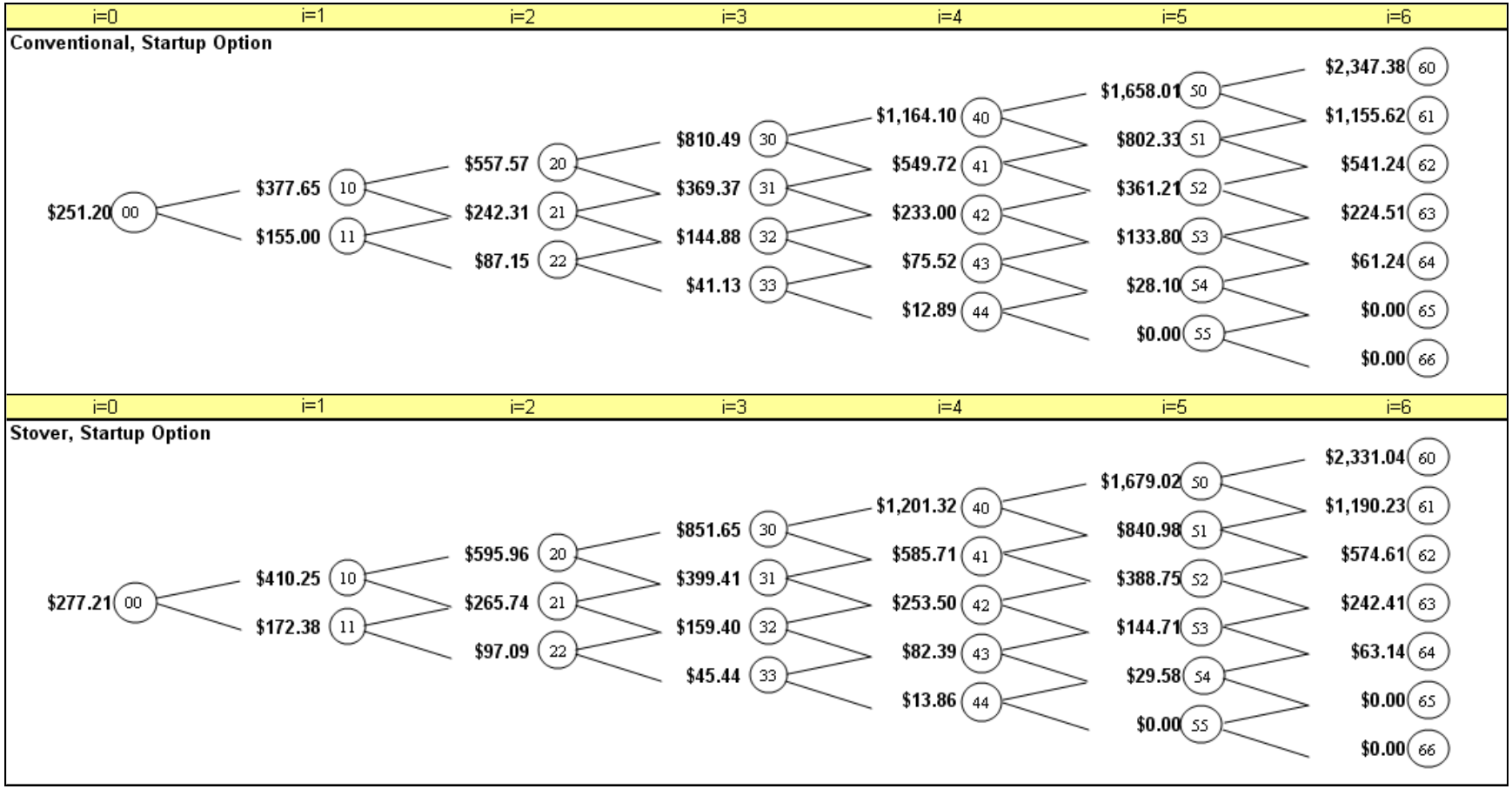

The estimated volatility of PV for the conventional plant is 33.13%, based on the whole sample period of prices during January 2001 - August 2007. The up-factor equals 1.39 and the down-factor equals 0.72. For the stover plant, the estimated volatility of PV for the stover plant is 30.84%, the up-factor is 1.36 and the down-factor is 0.73. By applying equations A.4 and A.5 in Appendix A, we find that the resulting p_u equals 47.72% and p_d equals 52.28% for the conventional plant. Similarly, for the stover plant, p_u equals 48.73% and p_d equals 51.27%. The binomial trees of the present values of assets for both plants are reported in Figure 12 and the corresponding NPVs are reported in Figure 13. We use equations A.6 and A.7 in Appendix A to complete the binomial tree of option values for starting a conventional plant and for starting a stover plant as reported in Figure 14.

Figure 15. Binomial Tree for Option Values of Technology Option CS (Conventional versus Stover)

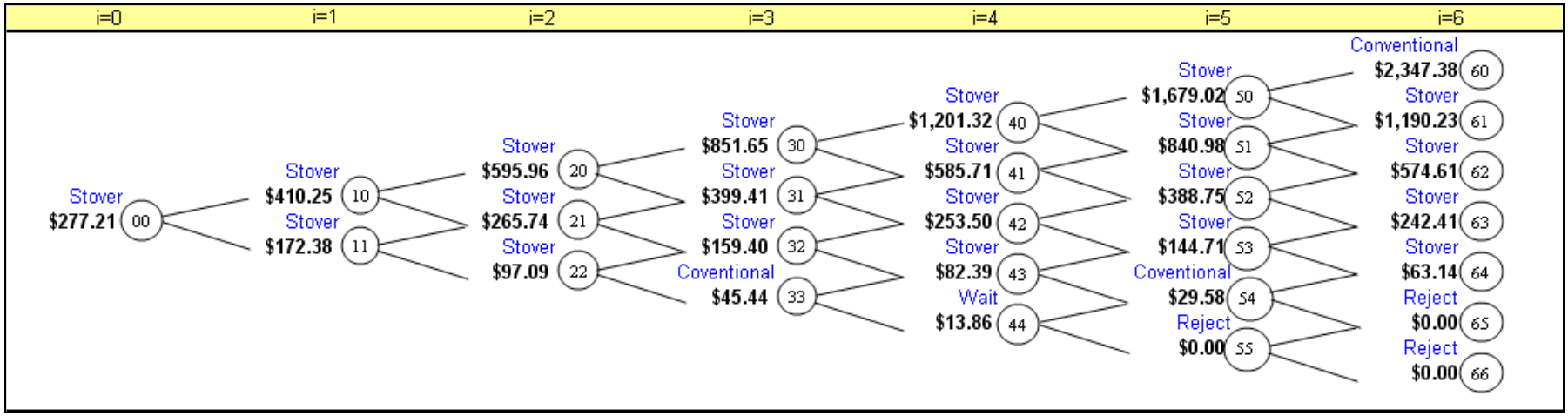

Finally, we compare the two binomial trees in Figure 14 and establish the binomial tree for Option CS. These option values and strategies are reported in Figure 15. To facilitate the choice of technology, we use the maximization function

$$C_{ij}^{CS} = Max\{C_{ij}^{C}, C_{ij}^{S}\} \tag{5}$$

to determine the option values, where C_{ij} denotes the option value at node *ij*. The superscript CS denotes the option of choosing the conventional technology versus the stover technology. For example, at node 00, the option value for the conventional plant C_{00}^{C} equals \$251.20 million and the option value for the stover plant C_{00}^{S} equals \$277.21 million. So, the option value of at node 00 is

$$C_{00}^{CS} = Max\{C_{00}^{C}, C_{00}^{S}\} = Max\{\$251.20, \$277.21\} = \$277.21 \text{ million}$$

and the best option is the stover plant.

To determine the strategy at each node, we need to compare the NPV and the option value of waiting for both technologies. For example, the best strategy at node 60 is to invest in a conventional ethanol plant if those conditions occur. The conditions include: the asset value of the conventional plant is positive and it is larger than that of the stover plant at node 60 ($NPV_{60}^{C} > NPV_{60}^{S} \Leftrightarrow$ \$2347.38 million > \$2331.04 million). At node 50, the best strategy is to invest in the stover plant. At node 50, the asset value of the stover plant is positive and it is larger than that of the conventional plant. That is, $NPV_{50}^{S} > NPV_{50}^{C}$ which implies that \$1673.36 million > \$1653.69 million.

However, the best strategy at node 55 is to reject both technology options. We need to go back to Figure 13 and Figure 14 to find out why rejecting these technology options is best. In Figure 13 we can compare the net present values of the conventional plant and the stover plant. At node 55, NPV_{55}^{C} = -\$48.19 million and NPV_{55}^{S} = -\$63.70 million. So, the NPV for both plants are negative and according to standard NPV rules they should be rejected. However, in the BOPM this is not sufficient for the investor to reject both

technology projects forever. She still needs to observe the option values of waiting. In Figure 14 the option value for the conventional plant is $C_{55}^{C} = Max\{c_{55}^{C}, NPV_{55}^{C}\}$ $= Max\{0, -48.19\} = \$0$ by using equations A.7, A.8, and A.9 in Appendix A. So, the value of waiting to invest in a conventional plant is zero, and there is no value of waiting for a future conventional plant at node 55. It is the same for the option value of the stover plant at node 55, since $C_{55}^{S} = Max\{c_{55}^{S}, NPV_{55}^{S}\} = Max\{0, -63.70\} = \$0$. Thus, if the conditions at node 55 occur and the investor waits until period 6, she will find out that the NPVs for both plants are still negative, regardless of which state occurs in period 6.

In contrast the best strategy at node 44 in Figure 15 is to wait. To find out why the investor should wait at this node and which project to wait for, we need to compare the option values and the asset values for the two plants. In Figure 14 the option value at node 44 is $12.89 million for the conventional plant and $13.86 million for the stover plant. At node 44 in Figure 13 the asset present value for the conventional plant is -$22.94 million and the asset present value for the stover plant is -$33.60 million. Although the NPVs for both technology projects are negative, the values of waiting for them are both positive. That is, $C_{44}^{C} = Max\{c_{44}^{C}, NPV_{44}^{C}\} = Max\{12.89, -48.19\} = \$12.89$ million, and $C_{44}^{S} = Max\{c_{44}^{S}, NPV_{44}^{S}\} = Max\{13.86, -33.60\} = \$13.86$ million. Since $C_{44}^{S} > C_{44}^{C}$, there is more value of waiting to invest in a stover plant and the best strategy at node 44 is to wait to construct a new stover plant at period 5.

The Option to Choose Stover-plus versus Conventional

The other combustion technology for a corn-based dry-milling ethanol plant is to use both corn stover and corn syrup as the energy source instead of natural gas. This is the stover-plus plant. Compared with a conventional plant, a stover-plus plant has ash as an additional byproduct and it uses corn stover plus corn syrup extracted from the DDGS as the combustion fuel. Consequently, the DDG production by a stover-plus plant is lower than that of a stover plant. It also requires some additional costs to control nitrogen emissions. Since corn syrup takes the place of part of the stover consumption, the nitrogen emission is lower than that from a stover plant and the costs for nitrogen control

is lower compared with that of a stover plant. One can also compare the other items for the three types of plants in Table B.1 in Appendix B.

The option to choose a conventional technology versus a stover-plus technology is labeled as Option CS+. The life of this option is also assumed to be 6 years and the annual production capacity for both plants in our analysis is again 50 mm gpy. First, we establish the binomial trees of asset present values and NPVs for both plants. Then we determine the option values for starting a new conventional plant and the option values for starting a new stover-plus plant. The final step is to compare the option values for these two technologies. Note that the binomial trees of asset values and option values for starting a new conventional plant are the same as before. We report the binomial tree of the option values for Option CS+ in Figure 16. It is clear that the stover plus technology dominates the conventional technology in most states, particularly when profitability is stable or rising over time. In states where the asset values are declining, a conventional technology may be preferred. But there are also a few states in which the best option is to reject both technologies, and not make the investment.

Figure 16. Option Values and Strategies for Option CS+ (Conventional versus Stover plus)

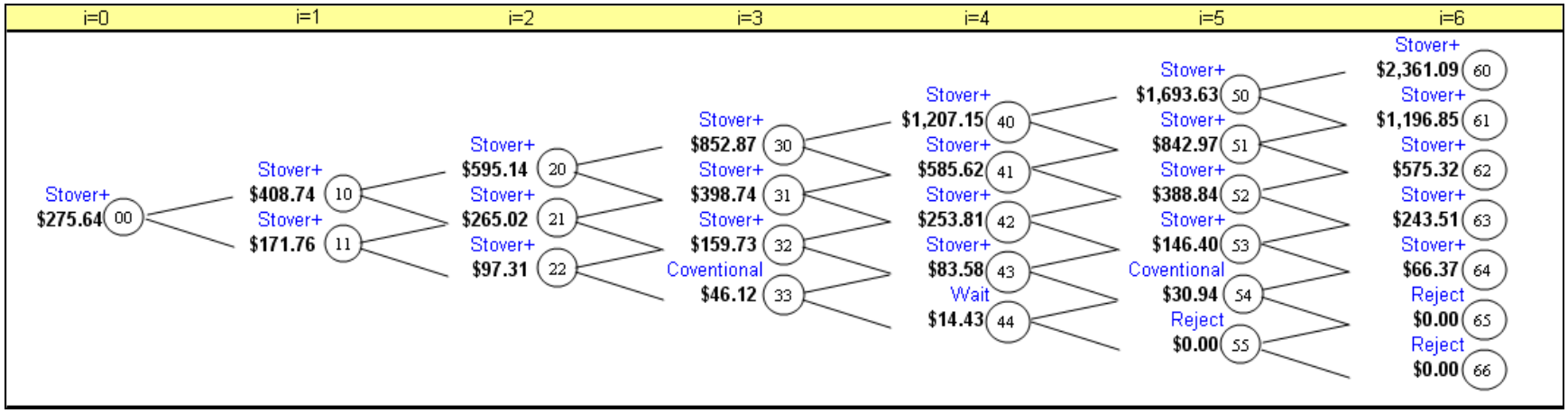

V. Conclusions

The methods currently used to evaluate investment projects in the ethanol industry tend to vary widely and there is no "standard model" that is used for investment analysis. Thus, the objectives of our study have been to identify the sources of uncertainty in ethanol facility investments, to identify some applicable real options for dry-milling ethanol plants, and to demonstrate how real option analysis can be used by ethanol investors to evaluate these investments.

We contend that real option analysis is a more complete approach to the ethanol investment problem. Standard net present value analysis is one method of investment analysis that can provide useful information to investors on the profitability and acceptability of an investment project. However, when used alone it does not adequately incorporate the role of uncertainty and the value of management flexibility into the investment decision. In this regard, it is important to note that option value derives from volatility, which in our analysis is driven primarily by uncertain market prices.

We apply discounted net present value and a binomial option pricing model in two real option analyses - the option to expand the scale of operations and the option to choose among competing dry-milling production technologies. In the expansion analysis, management flexibility is represented by the implied value of waiting. Even when the net present value of an investment is negative in the current period, the value of waiting might be positive. This is because there will be two possible outcomes (and implied asset values) in the next period. If one of the outcomes is sufficiently positive, then it may be worth waiting until the next period to decide. If we use net present value analysis alone, this option value will be estimated, and investors may not appreciate the value of management flexibility even if it is available.

We use recent historical ethanol prices, corn prices, and boiler fuel (natural gas and stover) prices as variables to simulate the historical cash flows for a small hypothetical dry-milling ethanol plant. The option to expand the scale of production for a conventional plant is evaluated under different scenarios. These scenarios exhibit different values for the level of volatility (of the present value of cash flows per gallon) and the initial present value of the ethanol facility, both of which are based on the distributions of cash flows from the ethanol investment.

One scenario covers the full period of our analysis, January 2001 to August 2007. In that scenario we find that the best decision is often to expand since the net present values of the investment project are positive. However, there are states in which it is best to wait (when the net present values are negative and the option value from waiting are positive and exceed the negative net present value). In relatively few states the expansion project is simply rejected.

A second scenario is based on May 2002 to December 2004. This is a period of relatively lower initial present value of the facility and higher volatility. In this second scenario, the best strategy is often to wait instead of expand. A third scenario is based on January 2005 to August 2007. This is a period of relatively higher initial present value of the ethanol facility and lower volatility. In this period we find that the net present value of the project is more often positive and the investor typically makes the expansion investment and there is seldom a need to wait. This finding is quite consistent with the observed rapid increase in ethanol plant capacity during 2005-07.

A fourth scenario is based on price developments during September 2007-April 2008. Sharply higher corn and natural gas prices combined with moderately higher ethanol prices have reduced the expected cash flow per gallon. As a result, expected cash flows per gallon and volatility have declined in recent months. The model correctly predicts that ethanol plant expansion investments would slow or stagnate in 2008.

Our results from evaluating the choice of plant technologies indicate that the stover-based combustion technologies are preferred. When comparing the option to start a conventional plant and the option to start a stover plant, we find that most often the best strategies are to choose the stover plant but not the conventional plant. This means that in a given state, the net present value of the stover plant exceeds that of the conventional plant. However, this is not always the case. In some states, the net present values of the conventional plant exceed that of the stover plant, so the conventional plant is chosen over the stover plant. If one looks only at the initial present values of these two plants, one may easily choose the stover plant over the conventional plant. This would ignore the risks of having unexpected lower net present value for the stover plant in the future.

For the option to choose a stover-plus plant versus a conventional plant the volatility of present value for the stover-plus plant is about the same as that for the stover plant.

However, the initial present value of a stover-plus-syrup plant is the highest one among the three plant types. We find that the stover-plus-syrup technology is chosen more frequently than conventional plant, but when the net present values for both plants are decreasing, the conventional plant may be chosen over the stover-plus plant. This indicates that the binomial option pricing model can provide additional information from which to make such an investment decision.

Finally, the results reported in this paper are based on research that employs standard financial modeling tools. Several of these tools may be familiar to practitioners in the ethanol industry. The real option model used in this study is built using Excel spreadsheets and the @Risk add-in simulation software for Microsoft Excel. Arguably, the most important parameter in this model is the measure of volatility. If an ethanol investor is to proceed with the real option approach, it is important to choose an appropriate volatility level. Also with sufficient historical data, it may not be necessary to carry out a Monte Carlo simulation in order to estimate the cash flow series. An investor may also decide to use sensitivity analysis for different assumed volatility levels. Other user-defined input parameters include: the initial asset present value, the disposal cash flows, the discount rate, the construction cost, and the duration (life) of the option. Logically, these parameters will vary according to plants with different sizes, locations, and input sources.

VI. References

De Kam, M. J., R. V. Morey, and D. G. Tiffany. "Integrating Biomass for Electricity and Process Heat at Ethanol Plants," American Society of Agricultural and Biological Engineers Meeting Presentation, 2007.

Copeland, T. and V. Antikarov. *Real Options: A Practitioners Guide*. New York: TEXERE, 2003.

Dixit, A. and R. S. Pindyck, *Investment under Uncertainty*. Princeton, New Jersey: Princeton University Press, 1994.

Hull, J. C. *Options, Futures, and Other Derivatives*. Third Edition. Upper Saddle River, New Jersey: Prentice-Hall, 1997.

Kirkbride, A. "Distillers Grains: Getting Value from Quality," Ethanol Producer Magazine, August 2006.

Nebraska Energy Office. Available at: www.neo.ne.gov/statshtml/66.html

Petrolia, D. "The Economics of Harvesting and Transporting Corn Stover for Conversion to Fuel Ethanol: A Case Study for Minnesota," Staff Paper P06-12, Department of Applied Economics, University of Minnesota, 2006.

Renewable Fuels Association. Available at: www.ethanolrfa.org/industry/statistics/#A.

Ross, S., R. Westerfield, J. Jaffe, and B. Jordan. *Corporate Finance: Core Principles and Applications*. First Edition, New York: McGraw-Hill Co., 2006.

Shapouri, H. and P. Gallagher. "USDA 2002 Ethanol Cost-of-Production Survey," U.S. Department of Agriculture, Agricultural Economic Report 841, July 2005.

Tiffany, D. and V. Eidman, "U.S. Dry-Grind Ethanol Production: Economic Competitiveness

in the Face of Emerging Technologies," In: *Food, Agriculture and the Environment: Economic Issues*, E. Defrancesco, L. Galletto and M. Thiene (eds.). University of Padova: Milan, Italy, 2005.

Tiffany, D. and V. Eidman, "Factors Associated with Success of Fuel Ethanol Producers", Staff Paper P03-7, Department of Applied Economics, University of Minnesota, 2003.

Appendix A
Overview of the Risk-Neutral Probability Approach

In this section, we will introduce the generalized equations for calculating the asset values and option values as in Figure 4. We let V denote the present value of the asset and C denote the option value. At the initial period, V equals the present value of the asset at period 0. Let u be the "up-factor" and d be the "down-factor" for the asset value, and let r_f be the risk-free rate of return. The up and down factors are determined by the following two equations:

$$u = e^{\sigma\sqrt{\Delta t}} \tag{A.1}$$

$$d = \frac{1}{u} = e^{-\sigma\sqrt{\Delta t}} \tag{A.2}$$

In equations A.1 and A.2, σ is the expected volatility of asset value and Δt is the increment in time for the asset value to change from one period to another. It is measured in years or parts of years. Let T denote the total life of the option (in years) and let n denote the total number of periods during T, then the time increment, $\Delta t = T/n$. When valuing financial options, Δt is usually smaller than one because financial assets are traded more frequently. In our analysis Δt =1, since $T = n$. In RNA, we use i to denote the number of periods in a binomial tree and j to denote the number of outcomes at a given period. In order to demonstrate the calculation for the option values and underlying asset values at a given state ij (which means period i and outcome j), we also set i = 0, 1, …, T and j = 0, 1, …, T.

The risk-neutral probability approach is based on the assumption that there exists an interest rate in the market that is risk-free, and that all individual investors are risk-neutral. In other words, individuals do not require compensation for risks (Hull, 2007). The risk-neutral approach assumes that the value of the underlying asset before expiration will either go up by an up-factor u or go down by a down-factor d for each period. At a given state ij, the value of underlying asset V_{ij} is given by

$$V_{ij} = u^{i-j} d^{j} V_{00} \tag{A.3}$$

where V_{00} is the present value of the asset at the initial period.

Correspondingly, the option value for each outcome of asset value will either go up or down by risk-neutral probabilities. We let p_u denote the up-probability and p_d denote the down-probability. These two probabilities are calculated by using the risk-free interest rate.

$$p_u = p = \frac{R_f - d}{u - d} \tag{A.4}$$

and

$$p_d = 1 - p = \frac{u - R_f}{u - d} \tag{A.5}$$

where R_f denotes the risk-free rate of return, i.e., $R_f = 1 + r_f$. The option value at a given state ij is calculated by

$$\begin{cases} C_{ij} = Max\{0, V_{ij} - X\} \text{ if } i = T \text{ and } j = 0, 1, \ldots, T & \text{(A.6)} \\ C_{ij} = Max\left\{R_f^{-1}(p_u C_{i+1j} + p_d C_{i+1j+1}), V_{ij} - X\right\} \text{ if } i, j = 0, 1, \ldots, T\text{-}1. & \text{(A.7)} \end{cases}$$

We notice that the calculation for option values at expiration ($i = T$) is different from that for option values before expiration ($i = 0, 1, \ldots, T$-1). At expiration, we only need compare zero with the NPV of the asset (which equals $V_{ij} - X$) to determine the option value. For simplicity, we let

$$\begin{cases} NPV_{ij} = V_{ij} - X & \text{(A.8)} \\ c_{ij} = R_f^{-1}(p_u C_{i+1j} + p_d C_{i+1j+1}) & \text{(A.9)} \end{cases}$$

then at expiration $i = T$, the option value is 0 if NPV_{ij} is negative and the option value is NPV_{ij} if it is positive. Preceding expiration, however, we need compare the NPV at state ij, NPV_{ij} and c_{ij}. We can interpret c_{ij} as the expected present value of waiting to invest until period $i + 1$. For $i = 0, 1, \ldots, T - 1$, if the value of waiting until next period exceeds the

NPV of investing in the current period, that is, $c_{ij} > NPV_{ij}$, then the option value C_{ij} is equal to the value of waiting; otherwise, the option value C_{ij} is equal to the NPV of investing at the current period NPV_{ij}.

Although the evaluation of real options is similar to the evaluation of American call options in the financial market, the strategies are different. Usually for American options, the investor will choose to exercise earlier only when the profits from exercising early are larger than the value of waiting, i.e., when $NPV_{ij} > c_{ij}$. Even if the NPV is greater than zero, the investor is suggested to wait if the inequality $c_{ij} > NPV_{ij}$ holds. In real option analysis, however, the investor is suggested to invest as long as NPV_{ij} is larger than zero, even if the value of waiting c_{ij} exceeds the NPV of investing.

Appendix B
Monte Carlo Simulation Method

Monte Carlo simulation is a method used to model uncertainty for the variable of interest. In our case the variable of interest is the present value of the ethanol facility investment. If we had sufficient historical data for many ethanol plants, we probably would not need to use Monte Carlo simulation to model uncertainty. Then we could simply use the historical data to model a representative ethanol plant and directly estimate the volatility characteristics in which we are interested. Since adequate historical data is not available for our analysis, we need to use this simulation method to adequately model the investment decision over the investment planning horizon.

In order to do this simulation first we generate values for annual cash flows from historical price data and an income statement of a hypothetical ethanol plant. This income statement will vary according to the specific production technology of the plant. Then we identify the cash flow distribution and make random draws from the specified cash flow distribution using @Risk (an add-in tool in an Excel spreadsheet). Each annual cash flow sequence is used to calculate the present value of the ethanol facility investment. By repeating this procedure we generate a distribution of present values and from the sample estimate the expected value and the volatility of the present value of the ethanol facility. We do this procedure on a "per gallon of ethanol produced" basis. We refer to this as the PVG - the present value per gallon of ethanol. Implicitly, we assume that the annual cash flows are independent over time (i.e., there is no serial correlation present from one period to the next).

To be more specific, we estimate the volatility of PVG by first estimating the series for CFG (the cash flow per gallon).[4] We do that using a linear model of the variables for ethanol price ($\tilde{P}_E$), corn price ($\tilde{P}_C$), and fuel price ($\tilde{P}_F$):

$$CFG = \beta_0 \tilde{P}_E + \beta_1 \tilde{P}_C + \beta_2 \tilde{P}_F + \alpha \qquad \text{(B.1)}$$

where the coefficients (the β's) and the constant term (α) are derived from a typical income statement of an ethanol plant. The description and value of parameters in the income

[4] We assume constant production for the ethanol plants, so the volatility of present values (PV) is the same as that of present values per gallon (PVG), and either CF or CFG will not affect the results of estimated volatility of PV.

statements under different technologies are given in Table B.1. Now we take the conventional plant as an example to illustrate how to derive (B.1) based on an income statement structure. Let CF_C denote the total annual cash flow (CF) is given by

CF_C = EBITDA – Interest Expense – Income Tax[5] (B.2)

where EBITDA is the earnings before interest, tax, depreciation and amortization. The EBITDA is calculated by

EBITDA = Total Revenue – Total COGS – Total Operating Expense (B.3)

where COGS denotes the costs of goods sold. We assume that for a conventional plant, the Total Revenue is from sales of ethanol and dried distiller grains (DDGS), and Total COGS includes corn cost, fuel cost, electricity cost, denaturant cost, costs for chemicals, enzymes, and yeasts, and costs for water and waste. These values are denoted in terms of efficiency ratios as given in Table B.1. Substituting EBITDA from (B.3) into (B.2), we get

CF_C = Total Revenue – Total COGS – Total Operating Expense – Interest Expense – Income Tax

and by further substitution, we get cash flow (CF)

CF_C = Ethanol Sales + DDGS Sales – Corn Cost – Natural Gas Cost – Total Other COGS – Total Operating Expense – Interest Expense – Income Tax (B.4)

When calculating CF, the ethanol price, corn price, and natural gas price are assumed to be variables while all other COGS, operating expenses, and interest expenses are assumed to be constants. We integrate the COGS and all expense items together except for the corn cost and natural gas cost. Let $\overline{C}_{O-C}$ denote the other COGS and expenses, and let CF_C denote the cash flows for the conventional plant. Then (B.4) can be rewritten as

$$CF\_C = (\tilde{P}_E \overline{Q}_E + \overline{P}_D \overline{Q}_D) - (\tilde{P}_C \overline{Q}_C + \tilde{P}_N \overline{Q}_N) - \overline{C}_{O-C}$$

Now, divide both sides of the equation by the quantity of ethanol production, $\overline{Q}_E$, and we get the equation for cash flow per gallon for a conventional plant (CFG_C)

$$CFG\_C = \frac{CF\_C}{\overline{Q}_E} = (\tilde{P}_E + \overline{P}_D \frac{\overline{Q}_{D-C}}{\overline{Q}_E}) - (\tilde{P}_C \frac{\overline{Q}_C}{\overline{Q}_E} + \tilde{P}_N \frac{\overline{Q}_{N-C}}{\overline{Q}_E}) - \frac{\overline{C}_{O-C}}{\overline{Q}_E}$$

[5] For simplicity, the income tax rate for ethanol plants in this study is assumed to be zero, since most of the small-medium ethanol plants are limited liability companies and no income tax is imposed on the company.

Table B.1 Efficiency Ratios for Conventional, Stover, and Stover-plus Technologies

Efficiency Ratios	**Unit**	**Notation a/**	**Conventional**	**Stover**	**Stover-plus**	**Source d/**
DDGS Production	tons/gallon ethanol	$\bar{q}_D$	0.0032	0.0032	0.0019	(1)
Ash Production	tons/gallon ethanol	$\bar{q}_A$	N/A	0.00016	0.00021	(1)
Corn Consumption	bushels/gallon ethanol	$\bar{q}_C$	0.3509	0.3509	0.3509	(2)
Natural Gas Consumption	mmbtu/gallon ethanol	$\bar{q}_N$	0.035	N/A	N/A	(3)
Corn Stover Consumption	tons/gallon ethanol	$\bar{q}_S$	N/A	0.0026	0.0009	(1)
Electricity Consumption	kwhs/gallon ethanol	$\bar{q}_{El}$	0.75	0.95	0.95	(1)
Denaturant Consumption	gallons/gallon ethanol	$\bar{q}_{De}$	0.05	0.05	0.05	(2)
Ammonia Consumption	tons/gallon ethanol	$\bar{q}_{Am}$	N/A	0.000007	0.000004	(1)
Limestone Consumption	tons/gallon ethanol	$\bar{q}_{Li}$	N/A	N/A	0.000075	(1)
Prices						
Ethanol	$/gallon	$\tilde{P}_E$	Variable	Variable	Variable	(4)
Corn	$/bushel	$\tilde{P}_C$	Variable	Variable	Variable	(5)
Natural Gas	$/mmbtu	$\tilde{P}_N$	Variable	N/A	N/A	(6)
Stover	$/dry ton	$\tilde{P}_S$	N/A	Variable	Variable	(7)
DDGS	$/ton	$\bar{P}_D$	92.85	92.85	92.85	(3)
Ash	$/ton	$\bar{P}_A$	N/A	200.00	200.00	(1)
Electricity	$/kwhs	$\bar{P}_{El}$	0.05	0.05	0.05	(2)
Denaturant	$/gallon	$\bar{P}_{De}$	1.50	1.50	1.50	(2)
Ammonia	$/ton	$\bar{P}_{Am}$	N/A	500.00	500.00	(1)
Limestone	$/ton	$\bar{P}_{Li}$	N/A	N/A	25.00	(1)
Other COGS and Expenses						
Chemicals, Enzymes & Yeast	$/gal ethl	$\bar{c}_{Ch}$	0.06	0.06	0.06	(2)
Water and Waste	$/gal ethl	$\bar{c}_{Wa}$	0.005	0.005	0.005	(2)
Operating Expenses b/	$/gal ethl	$\bar{c}_{OE}$	0.15	0.15	0.15	(2)
Interest Expense c/	$/gal ethl	$\bar{c}_{IE}$	0.0396	0.0517	0.0480	(2)
Depreciation & Amortization	$/gal ethl	$\bar{c}_{DA}$	0.1275	0.1849	0.1717	(1)
Construction Cost	$/gal ethl	$\bar{c}_{CO}$	2.25	2.94	2.73	(1)
Disposal Cash Flow	$/gal ethl	$DCFG$	0.3375	0.4410	0.4095	(2)

a/ The notation in this table is generalized. For different technologies, the subscripts of some terms vary. For example, the Interest Expenses $\bar{c}_{IE}$ for the three plants vary. We use $\bar{c}_{IE-C}$ to denote the Interest Expense for conventional plant, $\bar{c}_{IE-S}$ to denote the Interest Expense for stover plant, and $\bar{c}_{IE-P}$ to denote the Interest Expense for stover-plus plant.

b/ Operating Expenses include: Supplies, Maintenance & Repairs, Production Labor, Insurance, Administrative Expenses, Management Fees, Marketing Expenses, Real Estate Taxes, Other Taxes, Other Costs / Miscellaneous. $0.15/gallon is an approximation of the benchmark reported by Christianson & Associates, 2004-2005.

c/ Interest expense is calculated by the 1.5 debt-to-equity ratio and averaged at a 15-year debt schedule.

d/ Sources of data:

(1) De Kam, Morey, and Tiffany, "Integrating Biomass for Electricity and Process Heat at Ethanol Plants", 2007

(2) Author's calculation as an approximation of the benchmark reported by Christianson & Associates, 2004-2005

(3) USDA, "Ethanol Cost of Production", 2002

(4) Omaha F.O.B. monthly price, 1/1/2001-8/1/2007

(5) Chicago monthly market price reported by USDA, 1/1/2001-8/1/2007

(6) Industrial monthly price reported by USE, 1/1/2001-8/1/2007

(7) We assume that the stover price follows a lognormal distribution. The expectation of stover price is $52/dry ton and the standard deviation of stover price is $11/dry ton. This assumption was initially made by Petrolia (2006).

Or,

$$CFG\_C = (\tilde{P}_E + \overline{P}_D \overline{q}_{D-C}) - (\tilde{P}_C \overline{q}_C + \tilde{P}_N \overline{q}_N) - \overline{c}_{O-C} \qquad \text{(B.4)}$$

By plugging in the values for the constant terms in the above equation, we get

$$CFG\_C = \tilde{P}_E - 0.3509\tilde{P}_C - 0.0350\tilde{P}_N - 0.0700 \qquad \text{(B.5)}$$

Similarly, we can derive the model for cash flows under the other two alternative plant technologies. Let *CFG_S* denote the cash flows per gallon for a stover plant and *CFG_P* denote the cash flows per gallon for a stover-plus plant. Then the equations to calculate the cash flows per gallon for these two technologies are

$$CFG\_S = \tilde{P}_E - 0.3509\tilde{P}_C - 0.0026\tilde{P}_S - 0.0636 \qquad \text{(B.6)}$$

$$CFG\_P = \tilde{P}_E - 0.3509\tilde{P}_C - 0.0009\tilde{P}_S - 0.2446 \qquad \text{(B.7)}$$

We use (B.5), (B.6) and (B.7) and historical prices to estimate the historical cash flows for each hypothetical ethanol plant. We have 80 observations of historical monthly price for ethanol, corn, natural gas from January 2001 to August 2007. So, we can have 80 estimates for the cash flow of a conventional plant. For the stover plant and stover-plus plant in our study, we do not have historical stover price for the analysis. However, Petrolia (2006) studied the cost of harvesting and transporting corn stover for a biomass ethanol plant, and found that the corn stover cost follows a lognormal distribution where the mean of the corn stover cost is $52.00 and the standard deviation is $11.00. We use Petrolia's assumption for simulating 80 random draws from the cost of stover to match the sample size of corn and ethanol prices.

Using Excel and @Risk software, we can fit distributions to the sample data for each plant technology. The fitted distribution for CFG in the conventional plant is

$$\text{CFG\_C} \sim \text{Normal}\ (0.59, 0.50^2) \qquad \text{(B.8)}$$

where the distribution has a mean = 0.59 and a variance = 0.50 squared = 0.25. Because the simulated history of CFG_C exhibits a different volatility pattern during January 2001 to December 2004 compared to that during January 2005 to August 2007, we fit distributions to the subperiods. For subperiod I

$$\text{CFG\_C}_1 \sim \text{Normal}\ (0.31, 0.26^2) \qquad \text{(B.9)}$$

and for subperiod II

$$\text{CFG\_C}_2 \sim \text{Normal}\ (0.96, 0.55^2). \qquad \text{(B.10)}$$

We can use these subperiods to simulate the effects of changing expected level and volatility on the decision to invest.

For the stover plant, the fitted distribution to the 80 estimates of CFG is

$$\text{CFG\_S} \sim \text{Normal}(0.68,\ 0.55^2) \tag{B.11}$$

and for the stover-plus plant, the fitted distribution to the 80 estimates of CFG is

$$\text{CFG\_P} \sim \text{Normal}(0.66,\ 0.54^2) \tag{B.12}$$

Once we have specified the cash flow distributions we can use @Risk to generate 500 draws for the CFG in each year. Thus, as in step 8 (Figure 6), there are also 500 estimates of PVG for each plant over its life. Then by equation B.13

$$E(PVG) = \sum_{t=1}^{S} \frac{E(CFG_t)}{(1+r)^t} + \frac{E(DCFG)}{(1+r)^S} \tag{B.13}$$

where S is the total years of plant life, t denotes the year, and DCFG denotes the disposal cash flow of the asset (per gallon) at project termination in period S. We let u_i denote the logarithm of the change in the PVG.

$$u_i = \ln \frac{PVG_i}{PVG_{i-1}} \tag{B.14}$$

Then, using @Risk we can estimate the standard deviation of u_i for each type of plant in each subperiod. According to the Black-Scholes-Merton's method, the standard deviation is equal to the volatility of PVG.

The fitted distributions, the results of the estimated volatilities, and the value of other parameters are reported in Table 1. To calculate the expected present value (PV) for a given asset, we can simply multiply the annual amount produced times the expected CFG to get the total annual cash flows from the plant. We can also multiply the amount produced times the disposal cash flows per gallon to get the total disposal cash flows (DCF). We use equation B.15 to calculate the expected PV of the plant,

$$E(PV) = \sum_{t=1}^{S} \frac{E(CF_t)}{(1+r)^t} + \frac{E(DCF)}{(1+r)^S} \tag{B.15}$$