AgEcon SEARCH
RESEARCH IN AGRICULTURAL & APPLIED ECONOMICS

The World's Largest Open Access Agricultural & Applied Economics Digital Library

This document is discoverable and free to researchers across the globe due to the work of AgEcon Search.

Help ensure our sustainability.

Give to AgEcon Search

AgEcon Search
http://ageconsearch.umn.edu
aesearch@umn.edu

*Papers downloaded from **AgEcon Search** may be used for non-commercial purposes and personal study only. No other use, including posting to another Internet site, is permitted without permission from the copyright owner (not AgEcon Search), or as allowed under the provisions of Fair Use, U.S. Copyright Act, Title 17 U.S.C.*

CGPRT NO. 38

Effects of Trade Liberalization on Agriculture in Asia

Proceedings of a Workshop Held in Bogor, Indonesia October 5-8, 1999

The CGPRT Centre

The CGPRT Centre

The Regional Co-ordination Centre for Research and Development of Coarse Grains, Pulses, Roots and Tuber Crops in the Humid Tropics of Asia and the Pacific (CGPRT Centre) was established in 1981 as a subsidiary body of UN/ESCAP.

Objectives

In co-operation with ESCAP member countries, the Centre will initiate and promote research, training and dissemination of information on socio-economic and related aspects of CGPRT crops in Asia and the Pacific. In its activities, the Centre aims to serve the needs of institutions concerned with planning, research, extension and development in relation to CGPRT crop production, marketing and use.

Programmes

In pursuit of its objectives, the Centre has two interlinked programmes to be carried out in the spirit of technical cooperation among developing countries:

1. Research and development which entails the preparation and implementation of projects and studies covering production, utilization and trade of CGPRT crops in the countries of Asia and the South Pacific.
2. Human resource development and collection, processing and dissemination of relevant information for use by researchers, policy makers and extension workers.

CGPRT Centre Monographs currently available:

CGPRT No. 23 *Role of Secondary Crops in Employment Generation: A Study in a Rain-fed Lowland Village in Java*
by Toshihiko Kawagoe, Koichi Fujita, Shigeki Yokoyama, Wayan Sudana and Amar Kadar Zakaria

CGPRT No. 24 *Sweet Potato in Viet Nam, Production and Markets*
by J.W. Taco Bottema, Pham Thanh Binh, Dang Thanh Ha, Mai Thach Hoanh and H. Kim

CGPRT No. 25 *Marketing Innovation for Vegetables: Conditions of Diversification in Upland Farming*
by Yujiro Hayami, Toshihiko Kawagoe, Shigeki Yokoyama, Al Sri Bagyo and Amar Kadar Zakaria

CGPRT No. 26 *Rural employment and Small-scale Rural Food Processing in Asia*
edited by Aida R. Librero and Charles van Santen

CGPRT No. 27 *Local Soybean Economies and Government Policies in Thailand and Indonesia*
by Pattana Jierwiriyapant, Hermanto, Frederic Roche and J.W. Taco Bottema

CGPRT No. 28 *Changes in Food Consumption in Asia: Effects on Production and Use of Upland Crops*
edited by J.W.T. Bottema, G.A.C. De Silva and D.R. Stoltz

CGPRT No. 29 *Marketing and Processing of Food Legumes and Coarse Grains: Effects on Rural Employment in Asia*
Edited by T. Napitupulu, J.W.T. Bottema and D.R. Stoltz

(Continued on inside back cover)

Effects of Trade Liberalization on Agriculture in Asia

The designations employed and the presentation of material in this publication do not imply the expression of any opinion whatsoever on the part of the Secretariat of the United Nations concerning the legal status of any country, territory, city or area of its authorities, or concerning the delimitation of its frontiers or boundaries.

The opinions expressed in signed articles are those of the authors and do not necessarily represent the opinion of the United Nations.

CGPRT NO. 38

Effects of Trade Liberalization on Agriculture in Asia

Proceedings of a Workshop Held in Bogor, Indonesia October 5-8, 1999

Edited by
Michio Kanai
Boonjit Titapiwatanakun
D.R. Stoltz

CGPRT Centre
Regional Co-ordination Center for
Research and Development of Coarse Grains,
Pulses, Roots and Tuber Crops in the
Humid Tropics of Asia and the Pacific

CGPRT No. 30 *Upland Agriculture in Asia: Proceedings of a Workshop Held in Bogor, Indonesia April 6-8, 1993*
Edited by J.W.T. Bottema and D.R. Stoltz.

CGPRT No. 31 *Farmers and Traders in a Changing Maize Market in East Java*
Hitoshi Yonekura

CGPRT No. 32 *Integrating Seed Systems for Annual Food Crops*
Edited by H. van Amstel, J.W.T. Bottema, M. Sidik and C.E. van Santen

CGPRT No. 33 *Women in Upland Agriculture in Asia*
Edited by C.E. van Santen, J.W.T. Bottema and D.R. Stoltz

CGPRT No. 34 *Market Prospects for Upland Crops in Asia*
Edited by Sotaro Inoue, Boonjit Titapiwatanakun and D.R. Stoltz

CGPRT No. 35 *Database Management and Analytical Techniques for Agricultural Planning: A Course Manual*
Edited by J.W.T. Bottema, Siemon Hollema and Mohammad A.T. Chowdhury

CGPRT No. 36 *Economic Assessment of Selected Resource Management Techniques in Marginal Upland Agriculture*
Edited by Min-Jae Kim and D.R. Stoltz

CGPRT No. 37 *Agricultural Planning in Asia: Proceedings of a Workshop Held in Bogor, Indonesia April 13-24, 1998*
Edited by Mohammad A.T. Chowdhury, Gary G. Timoshenko, Pantjar Simatupang and D.R. Stoltz

This series is published by the CGPRT Centre, Bogor. For further information, please contact: Publication Section CGPRT Centre, Jl. Merdeka 145, Bogor 16111, Indonesia

CGPRT CENTRE
Publication Section

Editor: Douglas R. Stoltz

Production: Agustina Mardyanti
S. Tayanih (Yayan)

Distribution: Fetty Prihastini

Printer: SMK. Grafika Desa Putera

Table of Contents

Page

Foreword ix

Acknowledgements xi

Opening Session

Opening Address
Haruo Inagaki 3

Opening Remarks
Yukio Kawauchi 5

Message of Mr. Adrianus Mooy
Read by Nibhon Debavalya 7

Opening Address
Joko Budianto 9

Introduction

Trade Liberalization and World Food Prospects in the 21st Century
Keiji Ohga 13

Project Report: Effects of Trade Liberalization on Agriculture in Selected Asian Countries with Special Focus on CGPRT Crops (TradeLib)
Michio Kanai 27

Country Reports

Agricultural Trade Liberalization in China
Jikun Huang and Chunlai Chen 35

Comments on the Chinese Country Report: Trade Protection or Free Trade in the Agricultural Economy of China?
Chen Dongsheng 43

Effects of Trade Liberalization on Indian Agriculture
Ramesh Chand 47

Effects of Trade Liberalization on Selected Food Crops in Indonesia
Erwidodo and Prajogo Utomo Hadi 55

Comments on the Indonesian Country Report
Kaman Nainggolan 71

Effects of Trade Liberalization on Agriculture in Japan
Hiroaki Kobayashi 77

Comments on the Japanese Country Report
Akira Oikawa 95

The Effects of Agricutural Trade Liberalization on Malaysian Agriculture with Reference to the Palm Oil, Paddy and Tobacco Sub-Sectors
Tengku Mohd Ariff Tengku Ahmad and Ariffin Tawang 97

Comments on the Malaysian Country Report
Abdul Aziz Abdul Rahman 105

Effects of Trade Liberalization on Selected Agricultural Commodities in Pakistan
Muhammad Ramzan Akhtar 109

Comments on the Pakistani Country Report
Ikram Saeed 131

Effects of Trade Liberalization on Selected Agricultural Commodities in the Philippines
Minda C. Mangabat 135

Comments on the Filipino Country Report
A.C. Costales 141

Effects of Trade Liberalization on Agriculture in the Republic of Korea with Special Focus on CGPRT Crops
Myung-Hwan Sung 143

Comments on the Korean Country Report
Ho-Seop Yoon 147

Effects of Trade Liberalization in Thailand
Kajonwan Itharattana 149

Comments on the Thai Country Report
Yodying Kongtong 155

Effects of Trade Liberalization on Selected Agricultural Crops in Viet Nam
Nguyen Ngoc Que 159

Comments on the Vietnamese Country Report
Cu Chi Loi 169

Trade Liberalization: A Study on Impacts and Implications for Bangladesh Agriculture
Mostafa Abid Khan 171

Trade Liberalization on Agriculture in Cambodia
Srey Vuthy 177

Effects of Trade Liberalization on Agriculture in Lao PDR
Khamxay Sipaseuth 191

Myanmar Country Report
U Aung Hlaing 199

Effects of Trade Liberalization on Agriculture in Nepal
Shambu B. Pandey and Devendra Gauchan 207

Some Issues Related to the Implementation of GATT and SAPTA on Field Crops in Sri Lanka
H. Somapala 217

Consolidated Report

Consolidated Report on Effects of Trade Liberalization on Agriculture in Selected Asian Countries with Special Focus on CGPRT Crops (TradeLib)
Boonjit Titapiwatanakun and Michio Kanai 221

Closing Address

Haruo Inagaki 237

Appendices

Appendix 1: Fundamental Principles of Japanese Agricultural Policy Reform and the Basic Law on Food, Agricultural and Rural Areas 241
Appendix 2: Program 255
Appendix 3: List of Participants 259

Foreword

A regional workshop on "Effects of Trade Liberalization on Agriculture in Asia" was held during 5-8 October 1999 in Bogor, Indonesia, to discuss those findings and policy recommendations achieved in a three-year research project "Effects of Trade Liberalization on Agriculture in Selected Asian Countries with Special Focus on CGPRT Crops (TradeLib)".

The technical session of the workshop was started by a keynote discussion on "Trade Liberalization and Food Prospects in the 21st Century" by Dr. Keiji Ohga followed by the country reports with comments from those ten countries which participated in the project. Additional six other countries presented brief discussions on agricultural conditions related to trade liberalization. The session was concluded by consolidated discussion on the project achievements by Dr. Boonjit Titapiwatanakun. The workshop had Q/A and open discussion sessions.

I am pleased to publish **"Effects of Trade Liberalization on Agriculture in Asia: Proceedings of a Workshop Held in Bogor, Indonesia, October 5-8, 1999"**. To my regret, however, those discussions made in the Q/A and open discussion sessions were unable to be compiled here due to a technical problems.

I thank those speakers who participated in valuable and active discussions in the workshop and provided draft summaries. I also thank Dr. Michio Kanai, Dr. Boonjit Titapiwatanakun and Dr. D.R. Stoltz for their efforts in compiling and editing this volume. I thank all of the Centre's staff for their assistance in holding the workshop and preparing the manuscripts. Finally, I express my sincere gratitude to the Government of Japan for funding the project and supporting the workshop.

Hoping this volume will provide a wide range of information to the readers.

February 2000

Haruo Inagaki
Director
CGPRT Centre

Acknowledgements

We wish to express our deep gratitude to authors of the keynote address, country reports, additional country reports and commentators for presenting work.

In the course of preparation of this proceedings, we relied upon the help of the Centre's staff to whom we are indepted. First, we wish to express our thanks to Dr. Haruo Inagaki, Director, CGPRT Centre, for continuously backing up our activities. Also we wish to express our thanks to Ms. Rahajeng Pratiwi, Ms. Fransisca Wijaya and Ms. Agustina Mardyanti for typing.

Michio Kanai
Boonjit Titapiwatanakun
D.R. Stoltz

Opening Address

Haruo Inagaki[*]

It is my great pleasure to be able to open this Regional Workshop on "Effects of Trade Liberalization on Agriculture in Asia" today in Bogor, Indonesia.

First of all, I would like to express my sincere appreciation to all of you participating in this workshop in spite of your busy schedules. Especially, I would like to thank Mr. Yukio Kawauchi, First Secretary of the Embassy of Japan in Jakarta, representing the Government of Japan, the donor country, Mr. Nibhon Debavalya, Chief of the Population and Rural and Urban Development Division, representing the United Nations Economic and Social Commission for Asia and the Pacific (UN ESCAP) in Bangkok and Dr. Joko Budianto, Director General of the Agency for Agricultural Research and Development, representing the Government of the Republic of Indonesia, the host country, for their attendance to deliver messages to the workshop.

I am also grateful for the participation of Dr. Keiji Ohga, Professor of the University of Tokyo, Japan, and Dr. Boonjit Titapiwatanakun, Professor of the Kasetsart University, Thailand, who kindly present a keynote paper and a consolidated report, respectively, in this workshop.

My thanks go to the national experts and commentators of the ten countries participating in the project, China, India, Indonesia, Japan, Malaysia, Pakistan, the Philippines, the Republic of Korea, Thailand and Viet Nam, and additional speakers from six other countries, Bangladesh, Cambodia, Lao PDR, Myanmar, Nepal and Sri Lanka, for their participation.

This regional workshop is designed primarily to discuss and disseminate the findings and policy recommendations achieved in the country studies under the research project "Effects of trade liberalization on agriculture in selected Asian countries with special focus on CGPRT crops (TradeLib)". The "TradeLib" project is a three-year research project funded by the Government of Japan and implemented since 1997 in collaboration with the ten countries mentioned before. The principal objectives of the project are firstly to analyze the effects of trade liberalization on various aspects of agriculture in Asian countries at national, commodity and commodity-location specific levels, and finally to propose policy recommendations. Accordingly, the project was arranged to provide the participating countries with a chance to contribute to the further preparedness for the WTO regime and, eventually, the further development of agriculture in their countries. The CGPRT Centre has played a role of coordination in the project.

Today and tomorrow, the national experts of the ten participating countries, with commentators, will discuss the consolidated results of the country studies conducted during the first and second phases of the study and propose policy recommendations drawn from the studies. Also, we are pleased that speakers from six other countries, which have not participated in the project, will join the discussion with presentation of brief country reports related to trade liberalization in agriculture. I really look forward to your active discussion during the meeting.

Before I finish my address, I would like to reiterate that it is strongly expected for the participating countries to effectively utilize the outcomes of the project, mostly in a form of

[*] CGPRT Centre, Bogor, Indonesia.

publications, in your own countries. In this regard, I am going to propose, in the final part of this workshop, an idea to promote in-country follow-up activities in the individual countries.

Again, I would like to express my deepest gratitude first to the Government of Japan that enabled us to implement the "TradeLib" project and generously agreed upon the plan to invite the six non-participating countries to the workshop. I thank Dr. Boonjit Titapiwatanakun who, as the regional advisor, provided most exact and significant services to the project all through the period and all of the national experts, along with their institutes, who accomplished their country studies in such a successful manner.

Finally, I would like to thank all of the Centre's staff who worked hard to prepare for the workshop along with Hotel Salak.

Thank you very much.

Opening Remarks

Yukio Kawauchi[*]

It is a great pleasure for me to attend the regional workshop today entitled "Effects of Trade Liberalization on Agriculture in Asia", and to say a few words on this occasion on behalf of the Government of Japan.

First of all, I want to express my sincere gratitude to Dr. Inagaki, Director of CGPRT Centre and its staff members for arranging this workshop.

I understand that the objectives of this workshop are to discuss and disseminate the findings and policy recommendations from the three year research project "Effects of trade liberalization on agriculture in selected Asian countries with special focus on CGPRT crops". This project aimed to elucidate the effects of trade liberalization on various aspects of agriculture and to present policy recommendations to related parties in the participating countries.

In this context, I would like to raise two points to this workshop.

First, although WTO might be a major trade liberalization scheme in the international community, we are also interested in regional schemes of trade liberalization such as APEC and ASEAN AFTA. Can we expect the effects of each scheme to be mutually reciprocal beneficial, complimentary or exclusive of each other?

Secondly, we have experienced an economic crisis in the Asian region. Since agricultural products are based upon domestic resources, the agricultural sector is a huge contributor to the national economy facing the monetary fluctuation. The trade conditions affected by the financial crisis during the process of trade liberalization are worth analyzing.

Of course considering the social-economic diversification in Asia, each of the participating countries has its own understanding of the effects of trade liberalization. That is why we should consider differences of social-economic aspects among the participating countries. I would be most grateful if these issues could be included in the discussion.

It is expected that the outcomes of the project, publications of the country studies in particular, should be effectively utilized in the individual countries to meet the principal objective of the project. I am delighted that the project has been implemented in timely fashion, and funded by the Ministry of Agriculture, Forestry and Fisheries, Japan, outside the Japan ESCAP Cooperation Fund. Also I appreciate the follow-up activity to support the countries in this regard proposed by the Centre.

Thank you very much for your kind attention.

[*] Embassy of Japan, Jakarta, Indonesia.

Message of Mr. Adrianus Mooy*

*Read by Nibhon Debavalya***

It is my pleasure to welcome you all on behalf of the United Nations Economic and Social Commission for Asia and the Pacific (UN-ESCAP), to this regional workshop "Effects of Trade Liberalization on Agriculture in Asia" convened by the CGPRT Centre. The principal purpose of this regional meeting is to discuss the findings and policy options brought out by research carried out on the subject in selected Asian developing countries during the past three years. As you may know, the research was carried out under the project "Effects of trade liberalization on agriculture in selected Asian countries with special focus on CGPRT crops", popularly known as the TradeLib project.

At the outset I would like to express our gratitude to the Government of Japan, in particular the Ministry of Agriculture, Forestry and Fisheries, for providing financial as well as technical assistance to undertake the project.

As you know, the liberalization of the global trade regime is already an accepted economic strategy to increase overall prosperity. Nevertheless the liberalization of agricultural trade is a more complex issue due to its unique role in the economies of Asian developing countries. The agricultural sector enjoys a special place, not only in employment and contribution to gross domestic product, but also is deeply embedded in the socio-cultural life of rural people. That is the reason why the liberalization of this sector needs more caution and deeper thought. However the need for its openness is well realized by all and it is a matter of time before the agricultural sector is open wider.

The impacts of agricultural trade liberalization hopefully would be positive to all – in the long run. However the impacts could vary among countries as well as within countries in the short run. The process of globalization, in principle, should trigger more competition and a better allocation of resources. This in turn should raise productivity based on the comparative advantage of each country, community, or household. However, the time lag between accrual of increased benefits and giving up of current income is crucial for small and marginal farmers.

The impact of trade liberalization on the poor is a matter of great concern to us. How do we reconcile the need to develop an efficient agricultural sector and protect the interests of rural poor? Essentially they are not mutually exclusive. Focused policies are, however, needed to protect the interests of the rural poor in the short run. I strongly urge you to focus on, among others, the policies and programmes required to help the disadvantaged farming community in the context of agricultural trade liberalization.

I would like to thank the governments of the ten countries that participated in the project and thus contributed in the pursuit of more knowledge to assist the disadvantaged people. Regional projects like this have two interrelated objectives: to undertake detailed study in the individual countries and to learn from each other's cumulative experience. I hope we will be able to accomplish the later objective during the next three days. It is also my great pleasure to welcome the representatives of six other countries that were not part of the studies yet accepted our invitation to participate in this regional meeting. We hope your presence and participation

---

* Executive Secretary, UN ESCAP, Bangkok, Thailand.
** Population and Rural & Urban Development Division, UN ESCAP, Bangkok, Thailand.

will be mutually beneficial and enhance the relevance of the meeting. In that context I wish to record our appreciation to the Government of Japan for agreeing to finance the participation of the representatives from these additional countries as well.

We are also pleased to welcome Dr. Keiji Ohga from the University of Tokyo who will deliver a keynote speech during the meeting. I am certain that his rich experience in the subject will further contribute to the success of the meeting. I also wish to thank Dr. Haruo Inagaki, Director of the CGPRT Centre for his direction in the successful implementation of the project, Dr. Michio Kanai for leading the project and taking responsibility of detailed planning and implementation as well as Dr. Boonjit Titapiwatanakun for his valuable technical contributions.

Finally I hope that the outcomes of this meeting will be useful to all concerned and that the country studies carried out will provide useful inputs to the countries to develop appropriate and effective policies and programmes to develop the agricultural sector, particularly the CGPRT crops, and help the rural poor.

I wish you success in your deliberations.

Opening Address

Joko Budianto[*]

First of all, I would like to express my deep appreciation to the CGPRT Centre for the opportunity to attend this important workshop. It is my great honor to be here with all of you, the distinguished experts from other countries and all my Indonesian colleagues, to discuss a very important issue, not only for Indonesia but also for all our countries: the effects of trade liberalization on agriculture.

As you might know, agricultural development in Indonesia has been impressive during the past three decades. However, the economic crisis made all the achievements, which were obtained by hard work over a long time, disappear in a very short time, and forces the government to shift more seriously its development orientation. Reorientation of the agricultural development approach actually had started before the occurrence of economic crisis. This was caused by dynamic changes in the world market situation, and also took into account the fact that Indonesia's condition was significantly different from that of more than 30 years ago, when the country started to build its economy.

The government has set eight agendas of policy reform, which are actually the sharpening of the reorientation of agricultural development. Two of them are (i) repositioning agriculture as a leading sector and prime mover of the national economy through the improvement of productivity, efficiency and quality, and (ii) focusing agricultural development missions and targets to improve efficiency of our agribusiness. The crisis showed us the important role of agriculture as the safety belt. When other sectors experienced negative growth, agriculture showed positive growth.

I expect that this workshop will not only come up with quantitative measures of the impact of trade, but more than that, we need the policy implications for policy-makers in formulating sound policy framework. Although quantitative measures still need further study, the impact of the crisis on the Indonesian economy is obvious: poverty, food insecurity and unemployment. This is important to mention because of the following:

- Firstly, trade liberalization will affect income distribution not only among countries involved, but also within the country as a result of resource allocation. Therefore, we have to find policy options if the impact of trade worsens income distribution. We already know that unequal income distribution, both individual and regional, has encouraged social and political unrest in Indonesia. Therefore, it is our commitment to put the welfare of smallholders in top priority.
- Secondly, the economic crisis has made the purchasing power of the Indonesian majority decline sharply, adding to the number of people under the poverty line and leading to severe food insecurity. Similar to what I have mentioned above, we have to find policy options to eliminate this negative impact of trade liberalization.
- Finally, trade liberalization will affect the allocation of resources including labor. There are sectors, which will expand, but there also sectors, which will contract. In other words, trade liberalization requires structural changes, which may lead to transitional unemployment. The main reason for this unemployment is that the basic assumption of

[*] Agency for Agricultural Research and Development, Jakarta, Indonesia.

trade theory, that is perfect mobility of resources, does not always hold. If the sector, which will contract, is a sector involving many people, the impact will add to the existing unemployment, which is currently difficult to solve.

It should be apparent how important this workshop is to the current issues for sustaining agricultural development in our countries. Again, I highly appreciate your efforts in conducting this important event and hope you will have productive discussions and enjoy stay in Indonesia.

Trade Liberalization and World Food Prospects in the 21st Century

Keiji Ohga[*]

Introduction

In the post-cold war world, global-scale issues of environment, food, resources and poverty take the place of East-West problems as the most important one for the future of the human race. While these problems are closely interrelated with one another, the greatest attention is given to the possible worldwide limitations of the agricultural environment and resources in meeting food demand for the increasing population in developing countries.

Until the 1980s, the world's food supply and demand structure was conditioned by the political structure of the cold war between the East and West. Each country protected its agriculture in an effort to increase domestic food production, considering that food would be the basis of people's stable life. Though there were exceptions, such as some countries in Africa, most countries throughout the world achieved higher increases in food production than population growth thanks to scientific and engineering achievements epitomized by the "Green Revolution."

However, as many as about 800 million people still suffer from malnutrition in developing countries, some of whom are starving. Africa has seen a rapid increase in people suffering from starvation. Recognizing that the global environment was faced with a serious crisis as the 21st century was just around the corner, the United Nations Conference on the Environment and Development held in 1992 in Rio de Janeiro, Brazil, proposed the theme "sustainable development" with the aim of simultaneously achieving the two difficult tasks, the conservation of the environment and economic development. The concrete policy directions or plans to attain the objective still remain to be worked out.

The world's population has now exceeded 5.7 billion and it is expected that it will be over 8.5 billion by the year 2025. The food supply and demand situation in the world towards the 21st century may be summarized as one in the process of system change when a market economy globally penetrates into traditional or socialistic planned economies, while economic developments face worldwide limitations of environment and natural resources. The unlimited introduction of market mechanisms will bring in its negative effects, including instability in the food market, widening gaps between the rich and the poor and the disruption of nature and the environment on a global scale. Thus the problem before the human race would be how those negative effects are checked and we overcome the destructive effects of the free market system while accepting it in principle.

[*] Department of Global Agricultural Science, Graduate School of Agricultural and Life Sciences, the University of Tokyo, Japan.

Food problems: optimistic and pessimistic views

International organizations and agricultural institutions of major countries are generally optimistic about the world's food supply/demand situation in the future. For example, the Food and Agriculture Organization (FAO) forecasts that by the year 2010 the world's malnourished population will decrease and that international grain prices will tend to lower or remain on a similar level to the present ones. Conversely, Mr. Lester Brown of the World Watch Institute warns that food shortage, not war, will be the most dangerous threat in the future. A report of the International Rice Research Institute (IRRI) pointed out that rice yield increase will slow down in the future and it will cause a global rice shortage.

As noted, there are both optimistic and pessimistic views about the outlook of the world's food supply and demand. Which is right? Many people want to hear the answer.

While these projections about the future food situation in the world appear to be inconsistent at a glance, they are not necessarily so. In most cases, optimistic views are concerned with an outlook for a ten-odd year period or a mere extension of such a short or medium-term forecast. On the other hand, pessimists put emphasis on those many problems, which may grow serious several decades from now, and point out what will happen in such a long period if human beings do not change policies and take action to solve the problems. So pessimistic views are warnings, as it were. Which of the present or past trends you regard as major controlling factors and whether you look at the situation ten-odd years or several decades from now will change your projections greatly.

The trends in the past are deeply affected by the global political and economic structure. They are changing in accordance with the change of the main current of the structure.

In the past three decades, the world's agricultural production showed an increase at a higher rate than population growth. The real prices of grains discounted by inflation rates were on the decline, except in the period of disorder in the 1970s. Most projections including those made by FAO and the World Bank extended these past trends to the future and they projected that the future food trade market will have an ample supply for effective demand. They forecast that until 2010 the real prices of grains would remain on a similar level to the present or become lower.

Table 1 Grain price projections (base year =100).

	Base Year	Target Year	Wheat	Maize	Rice	Soybean
OECD	1990/94	2000	127	112	n.a.	119
FAPRI	1994/95	2004/05	98	113	114	113
USDA	1990/92	2005	63	66	87	67
MAFF, Japan	1992	2010	111	118	118	110
(IFPSIM model)			212	195	205	181
World Bank	1992	2010	67	79	69	n.a.

Note: MAAF, Japan Projection was estimated running Ohga's IFPSIM model.
Upper line of MAFF, Japan was projected assuming trend yield increase.
Lower line of MAFF, Japan was projected assuming gradual decline of yield growth rate to half of trends in 2020.
Estimate in 2010 of IFPRI was made interpolating the projection to 2020.
Estimate in 2010 of World Watch Institute was made interpolating the projection to 2030.
n.a. means "not available".

The globally successful "Green Revolution", that is the introduction of high-yield varieties of wheat and rice and increased utilization of chemical fertilizers, made a great

contribution to increased food production achieved all over the world in the 1960s and after. The high-level protection of agriculture in the U.S. and Western European countries also stimulated agricultural production and overproduction in these countries helped lower prices on the international trade market. These situations in the world grain market led to optimistic views about global food supply and demand among a lot of people.

In the 1980s, based on the recognition of this fact, the agricultural exporting countries and some other countries began to reduce agricultural protection and deregulate production control. They also started negotiation on agricultural trade in the Uruguay Round of the General Agreement on Tariffs and Trade (GATT) to open the market further in order to reboot international food prices and increase trade. In December 1993, they finally reached an international agreement. The principle of free market economy was recognized worldwide as applicable to all commodities including agricultural products and a sole free global market was established. The road to this overwhelming free market system was opened first by the global food crisis of 1972 and was completed by the agreement of the Uruguay Round after the unstable period of the 1970s and 1980s.

With respect to the economic system, after the destruction of the East-West cold war system at the end of the 1990s, food has finally integrated into the global free commodity market and the world food system is now going through a structural change. In addition, for the first time after the inception of human history, many people have realized that the ''Green Planet'' has its limitations to economic development. The structure of the world's food supply/demand system will see a further great change in the years ahead.

World food outlook overview

Many organizations, such as FAO, the World Bank, OECD and U.S. Department of Agriculture, have published their projections for the global food situation up to 2010. The basic assumptions for them, including economic growth and population increase rates, are roughly the same and projected results are similar in general. The world food projection made by the Ministry of Agriculture, Forestry and Fisheries (MAFF), Japan produced a similar result to those of the international organizations or other governments, in a case where it was supposed that future yield increases of agricultural products would be the same as the past trends (Table 1). The MAFF projection used the International Food Policy Simulation Model (IFPSIM).

The fundamental factors affecting the world food demand in the long run are population increase, countries' economic growth and changes in income distribution structure for the demand side. Those affecting supply are growth rates of cultivated area and yield.

Food demand

During the 1900-1995 period, the world's population increased at a yearly rate of about 1.3% from 1.7 billion to 5.6 billion. The present growth rate is 1.7% per year. The UN's median estimate (the estimate made on the assumption that the birth rate will decrease to 2.0% or less by 2050 worldwide) says that global population will grow to 8.5 billion by 2025 and 10 billion by 2050. It projected that the world will see an annual population growth of about 90 million, over 90% of which will take place in developing countries. Average population growth rate of developing countries is now about 2% per year although differing from country to country. So unless a higher growth rate of food production than this 2% is realized, there will be no improvement of nutritive level of people in developing countries on average.

Table 2 Supply and demand projections of cereals in the world (10 million tons).

	Target Year	Production	Consumption	Developing Countries		
				Production	Consumption	Net Trade
Actual 1989-90 Average		172	172	86	95	- 9
FAO	2010	233	233	132	148	-12
MAFF, Japan	2010	239	239	133	147	-14
IFPSIM model		221	221	114	135	-21
World Bank	2010	229	229	125	146	-21
IFPRI	2010	241	241	123	139	-16
World Watch Inst.	2010	215	268	China 30	China 49	China -19

Note: same as Table 1.

The food demand structure changes in parallel with increase in income. While people remain at a lower income level, they take most of their nutrition from starchy foods and increase grain consumption with rising income. When their income level reaches a certain level, their grain consumption becomes stagnant or begins to decrease while their consumption of animal protein foods such as livestock products and fishes, fats and oil, fruits and vegetables grows rapidly. At this stage, stimulated by strong demand for animal protein foods, the production structure of livestock farming changes, too, and a greater amount of grains would be consumed for feed for domestic animals. As a result, the total demand for grains, including those for human consumption and for feed, continues to increase. Japan reached this stage around the early 1960s. Of developing countries, many in Central and South America, the Middle East and Southeast Asia have reached this stage, and China is nearing this income level due to its rapid economic growth.

As outlined above, in most developing countries, rising income will lead to a rapid increase in the consumption of meat, dairy products and other livestock products. The projections made by MAFF, JAPAN and FAO's ''Agriculture in 2010,'' a report presented to its general assembly in 1993, show similar results with the rate of increase of per capita income in developing countries to 2010 at 2.6%. They estimated that per capita consumption of meat will grow at a yearly rate as high as 2% while that of grains in these counties will show zero growth. But the level of meat consumption will remain far lower than that in developed countries, which will be about 20 kilograms or so per capita per year, about a quarter in 2000 compared with the figure for developed countries. By the type of meat, there will be a shift from beef to chicken and pork, which are less expensive and have a higher feed efficiency, mainly in developed countries. By region, Asia, which has enjoyed a high economic growth, will see a very high increase rate (about 5% per year) of meat consumption and production.

It is expected that with increasing production of livestock products in developing countries, demand for grains for feed will rise at a higher rate. At present, about 60% of grains is consumed for feed in developed countries and nearly 40% worldwide. The ratio for feed in developing countries will rise from about 30% now to about 40% in 2010.

The malnourished population is estimated on the basis of basal metabolic rates and is based on the calorie level which enables humans to maintain their weight and do light activities (basal metabolic rate x 1.54). FAO projects that the world's malnourished population will decrease from 780 million at present to 640 million in 2010. This figure assumes policy efforts, such as improvement in income distribution and measures to meet import needs, and it is a fairly wishful, optimistic one.

Food supply

The World's agricultural production will exceed population growth, showing a yearly growth rate of 0.2% per capita until 2010. By region, East Europe and the former Soviet Union will see a growth rate of -0.1% and other industrial countries 0.4%, with an average rate of 0.2% for all developed countries, whereas the average figure will be 0.8% in the developing world. But it is expected that sub-Saharan Africa will be unable to achieve a higher growth rate of food production than population increase, with a rate of -0.2%.

These figures are small compared with those in the past two decades and the main reasons for the lower rate projections are gradual decreases in population growth rates and saturation of food consumption in developed countries and some developing countries. Per capita grain production in developed countries is now three times as much as in developing countries and a major portion of grain is consumed as feed or exported. But the consumption of livestock products, including meat and dairy products, is stagnant or declining recently partly because of people's increasing awareness of unhealthy effects of too high an intake of these foods.

According to FAO, the world's total cultivated area showed only a small increase of 2% in 20 years from 1.41 billion hectares (approx. 3.58 billion acres) in 1970 to 1.44 billion hectares (3.56 billion acres) in 1990. This means that almost all of the increase in food production during these two decades was brought about by higher yield. While increase in yields can be divided into two factors, improved utilization rate of cultivated land and increased yield per harvested area, 80% of the growth in global grain production in the 20 years can be attributed to the latter factor, that is increase in yields. In particular, in the 1980s and after, the world's total planted area of grains has been declining and greater grain production has been attained only by higher yields.

Increase in yield has a high correlation with the introduction of high-yielding varieties (HYVs), fertilizer application and expansion in irrigated land and the combined effects of these factors brought the successful ``Green Revolution'' to many developing countries. But from the 1980s onward, as the introduction of HYVs came to a lull without any new HYVs developed, appropriate land for irrigation has decreased, international grain prices have been stagnant and government subsidies to farmers have been reduced. At the same time, the pace of increase in irrigated land and in fertilizer use has slowed down and the growth rate of yields has also slowed (IRRI Annual Report for 1993). In particular, it is expected that developing countries will experience a slower increase in yields in the years ahead.

Table 3 Growth rate of production, harvested area and yield of cereals.

3 Year Average	Production Growth Rate		Harvested Area Growth Rate		Yield Growth Rate	
	million ton	%/year	million ha	%/year	ton/ha	%/year
1961-63 A	920	3.6	653.3	0.52	1.41	3.1
1969-71	1,221	2.6	680.8	0.53	1.79	2.0
1979-81	1,575	1.6	717.7	-0.25	2.19	1.9
1991-93 B	1,911		696.1		2.75	
B/A	2.1 times	2.5			2.0 times	2.3

Source: FAO AGROSTAT PC.
Note: World population increased 1.7 times from 1962 to 1992 and the annual growth rate was 1.9%.

Food balance or food trade

According to projections made by various organizations about the supply/demand balance and trade of grains by region for the year 2010 (see Table 2), the U.S. and a few other

exporters will continue to meet the import needs of developing countries. Thus developing countries will be more dependent on the supply from these countries.

The developing world will see a higher growth in demand than in production and so will have greater net imports, their grain self-sufficiency rates lowering to 90% by 2000. FAO forecasts that the net import of developing countries will be 120 million tons in 2000 and 150 million tons in 2010. It takes no account of limitations of trade balance and foreign currency reserves of these countries. Thus, it is just the import needs of these countries and whether they will be actually able to import these amounts will depend on availability food aid and other factors of future international trade.

Food aid in recent years is about 15 million tons worldwide. It is internationally regarded just as assistance for contingent local food shortages and as such it is almost ineffective in coping with any chronic and long-term shortage. The U.S. is the supplier of most food aid and offers it mainly as part of disposal measures to deal with excess agricultural products. But if excessive food stocks decrease in developed countries as a result of reduction of subsidies for farmers, food aid will be cut, too.

Food situation by major countries and regions: present and future

From the 1980s onward, the international food situation has tended to be an oversupply as a whole mainly because the former Soviet Union, which had been the largest food importer, reduced imports. But in the future, the international price of grains and other agricultural products is likely to rise higher than in the 1980s. Main factors causing this are the adoption of more market-oriented agricultural policies by developed countries with the aim of reducing agricultural protection and the impact of high economic growth mainly in Asia. The U.S., the world leader in grain export, will gradually withdraw from market intervention. As a result, the stock level of grains and other commodities which has the function of adjusting short-term supply and demand balance will be lower and the international market will become unstable. A temporary tight food market situation would happen occasionally.

The global food system is now in the midst of change after disruption of the cold war structure. From this standpoint, let's look at the food and agricultural situation in major countries and regions.

The most uncertain factor for the future world food situation is the food supply and demand of the former Soviet Union. It used to be a food exporter in the 1960s, but turned into a great importer of grains and other foods after the 1972 harvest. During the 1970s and 1980s, it remained an unstable market participant, importing over 40 millions of grains in some years. At present, however, it is in no position to fund a large-scale grain purchase, because of destroyed domestic economy and resultant lack of foreign currency reserves, though it suffers inactive agricultural production at home. The former Soviet Union has a greater per capita grain output than European countries. If it can switch to a market economy and raise the efficiency of distribution, shortage and processing and livestock farming production, it (and East European countries) may become a food exporter again in the long run. But it is not certain yet when and at what pace these countries will be able to overcome the difficulties caused by transition to a free market mechanism.

China has about one-fifth of the world's population and contains within its boundaries all of the climatic and topographical characteristics on the earth: from the tropics to deserts and the frigid zones and from mountainous areas to vast plains. By introducing a market mechanism, the country is realizing rapid economic growth and increasing its consumption of vegetables, fruits and livestock products. The Chinese are now shifting stress in rice

consumption from quantity to products having a better taste. China has cultivated area per capita twice as large as Japan and will continue food self-sufficiency in general for some time. But its yield is approaching Japan's level and it is doubtful that it will increase at a pace as fast as in the past. On the other hand, in a rapid economic growth, China's agricultural land has been converted into urban use such as industrial land, housing land and roads or abandoned and resulted in decline of cultivated area.

Considering that declining agricultural land and stagnation in yield growth will be the main trends in China, Mr. Lester Brown predicts that the country's grain output will fall by as much as 20% by 2030, causing grain shortage of 220 million tons. He does not take into account the indirect demand for grains for feed into consideration, but it is expected that this demand will grow to be a heavy one in the long run in the livestock farming sector. A recent report jointly compiled by the Rural Economy Research Center, a policy study agency of China's Department of Agriculture, and Japan's Overseas Economic Cooperation Fund says that China will see a grain shortage of 136 million tons in 2010.

Besides the emerging tendency of grain shortage in recent years, China is experiencing a widening gap between agriculture and industries as a result of rapid economic growth, giving rise to grave problems of relative dullness of agricultural production and larger regional gaps. There are both optimistic and pessimistic views among researchers as to whether China will be able to secure enough feed to support livestock farming in the long term and whether it will succeed in obtaining sufficient resources for domestic food production in the above-mentioned situation of widening gaps between agriculture and industries and among regions.

In South Korea, Taiwan and many countries in Southeast Asia, high economic growth has changed the food demand structure from grains to vegetables, fruits and livestock products, making the diversification and modernization of agricultural production an important issue. In particular, increasing demand for livestock products will lead to a greater import or less exporting ability of feed grains and protein materials for feed. The problems of food supply are also growing more varied, from increased production to improvement of transportation, storage, distribution and processing systems. In addition, these countries are faced with the problems of how to develop areas less advantageous to farming and how to cope with destruction of the natural environment, such as neglected agricultural and forest areas. These issues need to be settled as soon as possible.

While Asia has changed its food consumption patterns to follow Western ones, it is unlikely to reach the Western level in the future. At present, developed countries consume about 60% of their grain output for feed. Rather than trying to attain such a high level, Asian countries will form their own, Asian-type consumption patterns instead.

Let's suppose that the consumption of livestock products in China and other Asian countries will reach the present level in Japan, though it will not attain the Western level. Let's suppose, too. That these countries' agricultural production will follow a development pattern similar to Japan's. In such a case, considering that Japan now imports nearly 30 million tons of grains and oilseeds for feed, a simple calculation shows that the Asian countries will have to import more than ten times, that is, over 300 million tons of grains and protein crops for feed. Needless to say, this is just an exaggerated figure presented to show the problem and Asian countries have a variety of ample resource stocks for agricultural production, including agricultural land. But if countries in East and Southeast Asia continue rapid economic development and take a similar route to Japan, they will have a serious issue of food supply and demand. Who will supply the feed for the production of livestock products to meet the demand of richer people in Asia? Will Asian countries consume rice for feed or will they convert paddy fields into the fields of feed crops or will they rely on imports? These questions, which once confronted Japan, are now in front of agriculture in Asia on a far larger scale.

India is also pursuing the policy of promoting a free market economy, but unlike China, its economic development is slow. The increased production of basic foodstuffs, mainly grains, will be the country's prime problem for a long time. While India will be able to meet the basic demand for food at home, it will have only a limited role in international food trade.

The Middle East, Central Asia and Northern Africa are mostly arid or semi-arid land and have increased dependence on imports, since food and agricultural production has been unable to satisfy an increasing demand for food resulting from population increase and economic growth. Agricultural land use in these regions is based on the historical experiences for many years and irrigated farming, grain production, grassland for mainly sheep raising, etc. are carried out according to land conditions. Once the ecosystem is destroyed by careless land use, agricultural land will be easily devastated and turned into desert. In these conditions, it is a very difficult task to realize an expansion in sustainable agricultural production and so these areas will have to increase food imports for many years in the future.

Latin American countries and the Philippines are experiencing wider gaps between the rich and the poor as a result of introduction of free market economy policies and structural adjustments led by the World Bank and other organizations. Under a heavy burden of debt accumulation, these countries are unable to depend on a large amount of food imports. The most important problem for them is how to continue to increase the agricultural production of mountainous areas and other disadvantageous districts and the output of small farmers.

During the past three decades, many countries in sub-Saharan regions have had a declining food output per capita and have not been successful in raising nutritional levels despite a substantial increase in food imports. The World Bank-led structural adjustments, that is free market economy policies, have failed in many countries, which are more and more dependent on international aid and imported foods. No full-scale policies of food self-sufficiency and independence to feed at least increasing population have been found yet.

The EC, the U.S., Canada, Japan and other developed countries are further opening their agricultural product markets and reducing protective measures for agriculture in compliance with the agreement reached in the Uruguay Round. Because of this, these countries will be unable to avoid the lowering of farmers' income levels and the slowdown of growth in agricultural production.

As outlined above, many developing countries have achieved improvement in their food situation as a whole since the 1960s. But the introduction of a free market economy and structural adjustment led by the World Bank, etc. have resulted in widening gaps between the rich and the poor. In many cases, as seen in sub-Saharan regions, there has been no meaningful betterment in people's nutritive level despite a substantial increase in food imports.

Effect of trade liberalization on food security

Trade contributes to food security in a number of ways: through making up the difference between production and consumption needs; reducing supply variability; fostering economic growth; making more efficient use of world resources; and permitting global production to take place in those regions more economically suited to it. However, reliance on trade may also bring some risks. These include uncertainty of supplies, world market price instability, increasing environmental stress, and deteriorating terms of exchange on world markets (falling prices for agricultural exports, higher prices for food imports), if appropriate policies are not in place.

Most countries could meet more of their domestic food needs from national production if food prices were allowed to increase to a high enough level or sufficient alternative

incentives were provided to domestic producers. However, the cost of pursuing food self-sufficiency policies can be economically high, as shown by the differences between domestic and world cereal prices in some countries. The differences must be borne by the government or consumers of the country. Trade plays the role of allowing domestic food consumption to be cheaper by less costly imported supplies. Trade also increases consumer choice by providing access to a greater range and diversity of foods. This is particularly important in high-income countries, where food trade includes the exchange of broadly similar but differentiated products. Much of the one-third of world food trade which takes place within OECD countries is of this kind.

While food imports can make a vital contribution to food security, countries relying on food imports have two key concerns: their capacity to maintain food imports at desired levels and reliability of access to these imports.

Food import capacity depends on the prices and other terms on which food can be imported, as well as on the foreign exchange situation. Those countries whose dependence on food imports has been increasing are now more vulnerable to shocks arising in food or other markets. Another fear associated with opening up a country's food markets to trade is that it will lead to increased competition for food supplies between rich consumers in high-income countries and low-income consumers in developing countries.

As developed countries usually subsidize their agricultural sectors while developing countries often tax them, the net effect of policy reforms on world markets is ambiguous.

The effects of the Uruguay Round of agricultural trade can differ for agricultural importers and exporters, but all countries have an interest in greater global price stability. The Uruguay Round will influence price stability in at least three ways.

Production will shift from high-subsidizing regions to low-subsiding regions, with differing likelihood of production variability. If the shift results in a concentration of some products to a specific area vulnerable to climatic change, the effect of production fluctuation of that area will bring about disruption of global price stability.

The Uruguay Round will also influence world price stability through the tariffication process. As tariffication causes prices in all countries to be more responsive to changes in world market conditions, the magnitude of world market price changes needed to absorb supply or demand shocks is likely to be reduced. While most agricultural tariffs are now bound, countries may apply lower tariffs at any time. Where non-tariff measures were replaced by tariffs, use of that clause would also make imports responsive to changes in world prices. Furthermore, as improved information systems are put in place to monitor harvests on a global basis, market surprises, such as the effect of cereal purchases by the former USSR in 1972, are now less likely to happen.

On the other hand, most producers will respond to the world price change in the same direction. These responses will be more elastic when producers are involved deeper in the global market economy, even though the synchronization of responses may be mitigated by the offsetting effect of erratic production fluctuations in various countries. The supply elasticity change would lead to larger price fluctuation. The well-known cobweb model (Figure 1) illustrates this effect. When the world supply curve becomes more elastic and shifts from S_0 to S_1, price fluctuation will change from P0, P1, P2, … to P0, P1', P2'… Thus it would become bigger and the duration of it would be longer.

A demand curve shift to a more elastic one would have the opposite effect of mitigating the price fluctuation. Overall, the total effect of trade liberalization is ambiguous, but it may make the price fluctuations worse or at least prolong them when the change of production elasticity is bigger than that of demand elasticity.

Figure 1 The cobweb model.

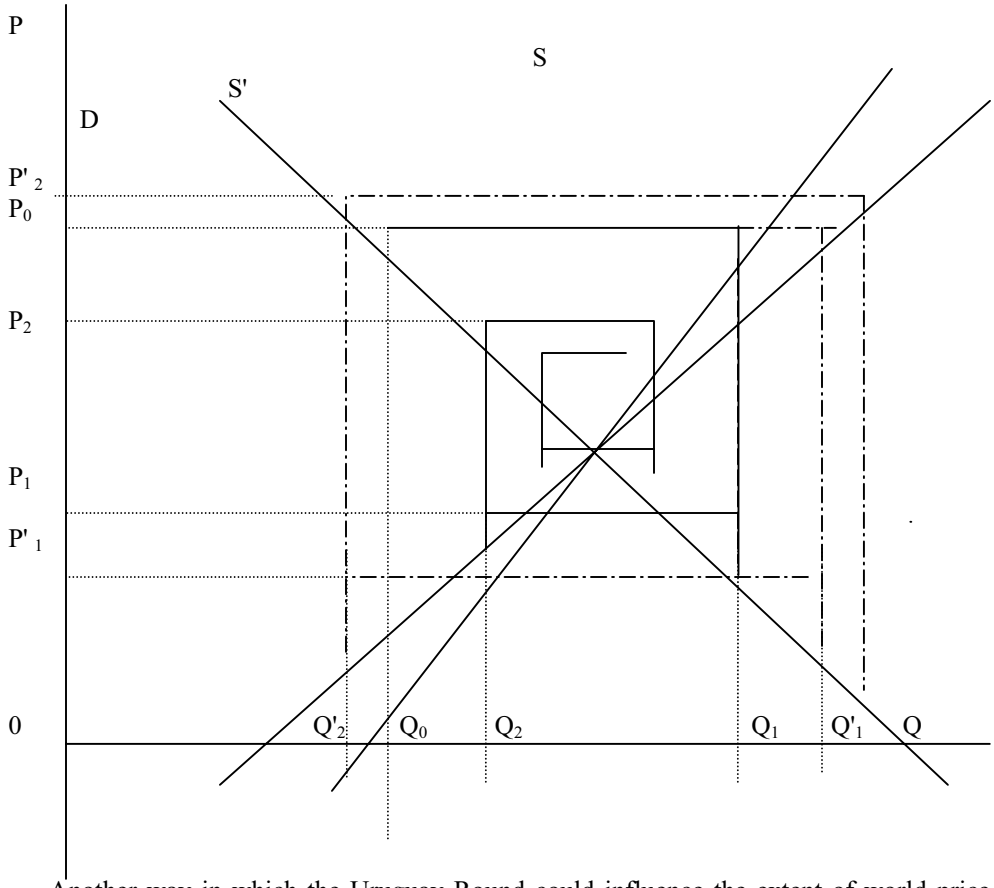

Another way in which the Uruguay Round could influence the extent of world price instability is through changed incentives for stockholding. The reduction in market intervention, particularly by exporters, makes it less likely that government stocks will accumulate in the same way in the future as seen in the past, and thus the size of global stocks may fall. With limited global stocks, the world is less able to buffer adjustments of consumption to changes in production. Even though substitution of private for public stocks could make some contribution to stability, on balance, price stability may deteriorate for cereals and for some livestock products because of the stockholding effect.

Policy direction to attain world food security

In developing countries, about 800 million people are still suffering from chronic hunger and malnutrition. This serious problem needs to be urgently tackled not only from a humanitarian point of view but also for stabilizing world food supply and demand. The question of how to ensure, through concerted national actions, stable world food supply which meets the basic approaches towards achieving food security.

Reflecting the multifaceted nature of world food security, it is necessary for each country to deploy a variety of measures in accordance with its respective position.

For major food importing countries, the basis for a stable food supply should be an appropriate combination of three elements, namely, the maintenance and expansion of sustainable domestic food production, the securing of stable imports, and the maintenance of proper stockpiles, depending on the situation of each country. An anticipated large increase in food demand is an important mid- to long-term issue.

In devising their strategies, countries should bear in mind that although the use of stockpiles is effective to meet the demands in an emergency situation, it is by nature a temporary measure because of quality and cost constraints. If we consider a large population increase in the future, it would be most important to maintain and increase domestic food production, within the framework of international rules, making effective and sustainable use of existing production resources in an economically, socially and environmentally sound manner.

Trade is an important element for achieving food security, as its stable development would lead to building a smooth and effective supply system. But it should be noted that sustainable food production in the country is the most reliable basis for securing stable food supplies to meet the growing demands. We still live in an unstable and uncertain world where sovereign countries put first priority on securing a stable and safe life of their own people. It is not appropriate to refer to trade liberalization as being the sole guideline for the achievement of food security. Trade and domestic production should be carried out in an appropriately balanced manner.

Food exporting countries, considering the important role of trade in securing stable food supplies for importing countries, need to strive for stable production and export responding appropriately to trends of demand, and to ensure continued and stable food export to importing countries even during periods of food shortage.

Tackling current hunger and malnutrition

Considering that there still are more than 800 million people suffering from hunger and malnutrition in developing countries, our urgent task is to find ways to secure stable food supply in these developing countries, especially low-income food-deficit countries. To this end, in addition to food aid as an emergency response measure, it is important to eradicate poverty through creating a political, economic and social environment conductive to improving access to food. Moreover, in order to provide a fundamental solution to the hunger and malnutrition problem of these developing countries, the strengthening of sustainable food production capacity in each of these countries is important. It is also important to provide technical and policy assistance, along with the efforts mainly by developing countries themselves to improve infrastructure and strengthen investment in agriculture.

In addition, population problems should also be tackled, and steady implementation of the Program of Action adopted by the International Conference on Population and Development is necessary.

Measures towards the achievement of food security

Since food is the most basic necessity for people's life, the fundamental role of agricultural policy is to ensure its stable supply. Given the present state of the national diet, it is difficult for most importing countries to produce all the necessary food within the country where production resources including climatic conditions are constrained. It is essential to have an appropriate combination of imports and stockpiling in addition to domestic production for ensuring a stable food supply.

Japan is a typical food importing country which takes food security most seriously. The Japanese food self-sufficiency ratio is only 42% (in calorie basis, 1995) and the cereal self-sufficiency ratio is 30%, an exceptionally low figure compared to other developed countries (Figure 2 and Table 4). Reflecting this fact, 80% of Japanese feel concerned over the future food situation and 70% of them are willing to pay additional costs for food if they consider it reasonable to secure their food in the long run, according to the result of a recent public-opinion poll.

Figure 2 Cereal self-sufficiency ratio of major developed countries.

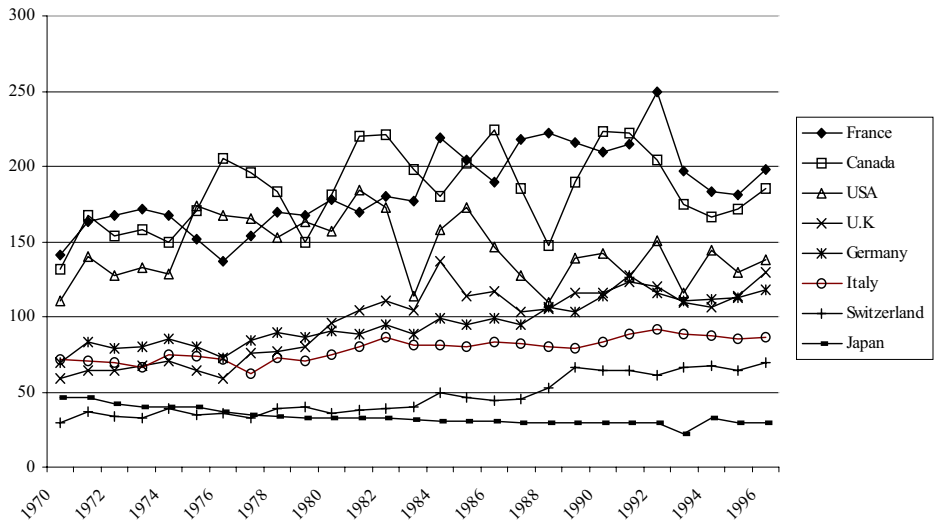

Source: Calculated from FAO, AGROSTAT.

Following this national sentiment, the Japanese food and agricultural policy principally aims at putting the brakes on the declining trend of the food self-sufficiency ratio. In concrete terms, based on the ''Long Term Supply and Demand Outlook for Agricultural Products (1995)'' the Japanese government expressed the will to make every effort to maintain and increase domestic food production as much as possible through sustainable utilization of national land resources, effectively responding to consumer needs for high quality, safe and fresh products with reasonable prices, and through production and marketing efforts that take advantage of the merits of domestic products.

Resources for food production such as agricultural land, once destroyed, are extremely difficult to restore. It is important to secure the necessary level of domestic food supply capacity to cope with unexpected situations, by maintaining and securing good agricultural land, improving and enhancing soil productivity, and ensuring the availability of farming technologies.

Table 4 Cereal self-sufficiency (%) of major developed countries.

Year	France	Canada	USA	U.K.	Germany	Italy	Switzerland	Japan
1970	141	132	111	59	70	72	30	46
1971	163	167	140	64	83	71	37	46
1972	167	154	127	64	79	69	34	42
1973	172	158	133	67	80	66	33	40
1974	167	150	128	71	85	75	39	40
1975	152	171	174	64	80	74	35	40
1976	137	205	167	59	73	72	36	37
1977	154	196	165	76	84	62	33	35
1978	169	183	153	77	90	73	39	34
1979	167	150	163	80	86	71	40	33
1980	178	181	157	96	91	75	36	33
1981	169	220	184	104	88	80	38	33
1982	180	221	173	111	95	86	39	33
1983	177	198	114	104	88	81	40	32
1984	219	180	158	137	99	81	50	31
1985	204	202	173	114	95	80	46	31
1986	190	224	146	117	99	83	44	31
1987	218	185	127	103	95	82	45	30
1988	222	147	109	105	106	80	53	30
1989	216	190	139	116	103	79	66	30
1990	210	223	142	116	114	83	64	30
1991	215	222	126	123	127	88	64	29
1992	249	204	151	120	116	92	61	29
1993	197	175	116	109	111	88	66	22
1994	183	166	144	106	112	87	67	33
1995	181	172	129	114	113	85	64	30
1996	198	185	138	130	118	86	70	29

Source: Calculated from FAO, AGROSTAT.

Direction of international agricultural and food policies

The World Trade Organization (WTO), OECD, the World Bank, FAO and other international organizations adopt the basic policy of free trade to help expand the opportunities of agricultural product export. Many developing countries, including those in Africa, have no export competitiveness of food, except tropical crops, and they neglect food self-sufficiency, the basis of food security. This is the direct opposite of the policies of developed countries, which have well protected agriculture both in trade and domestic production. The basic policy adopted by developed countries and some Asian countries, which succeeded in realizing a higher rate of agricultural production than population growth, is to raise the food self-sufficiency ratio or to keep the ratio level enough to secure a stable food supply. It would be crucial for developing countries to switch the policy direction from free trade of agricultural products to that of achieving food self-reliance in the long run.

From a long-term viewpoint of several decades, it will be a very important to promote agriculture, forestry and fisheries in developing countries. Considering this, the recent trends of the World Bank and Asian Development Bank to cut investment and staff for agricultural development are shortsighted policy shifts.

Japan is a net food importer and deeply interested in the world's food security. It was an agricultural country supported by small-scale farmers and had to work hard to establish self-reliant policies for food and agriculture. It started economic development far behind Western countries. Based on these historic experiences, Japan could contribute to agricultural development and policy-making in developing countries.

References

Anderson, P. 1994. World Food Trends and Future Food Security. IFPRI, Washington D.C.
Brown, L.R. 1996. Tough Choices. W. W. Norton & Company, New York.
Brown, L.R. 1995. Who Will Feed China? W. W. Norton & Company.
FAO. 1996. World Food Summit Rome Declaration. Rome.
FAO. 1996. World Food Summit Plan of Action. Rome.
FAO. 1995. World Agriculture: toward 2010, an FAO study. Rome.
IRRI. 1994. IRRI Annual Report 1993.
MAFF Japan. 1996. The Results of Forecasts Using a World Food Supply and Demand Model (A Provisional Translation).
Mitchell, D.O.; and Ingco, M.D. 1993. The World Food Outlook. International Economics, Department of the World Bank, Washington D.C.
OECD. 1996. AGLINK Model Documentation. Paris.
Ohga, Keiji. 1998. World Food Security and Agricultural Trade. Preliminary Draft presented at OECD Workshop, Paris.
Ohga, Keiji; and Gehlar, Clemen. 1993. The International Food Policy Simulation (IFPSIM) Model: Documentation and Applications. Preliminary Draft, IFPRI, Washington, D.C.
Ohga, Keiji; and Yanagishima, Koji. 1996. IFPSIM, JIRCAS Working Paper No.1. 1996.
USDA. 1994. Long-Term World Agricultural Commodity Baseline Projections. Washington D.C.
Tietenburg, T. 1996. Environmental and Natural Resource Economics. 4th edition, Harper Collins Publishers, New York.
Tyers, R.; and Anderson, K. 1992. Disarray in World Food Markets. Cambridge University Press, London.

Project Report: Effects of Trade Liberalization on Agriculture in Selected Asian Countries with Special Focus on CGPRT Crops (TradeLib)

Michio Kanai[*]

Background

With the fast economic growth in the region, in particular in Asian developing economies, trade of agricultural products is expanding. Recent development both in international and regional trade further accelerated this trend. In 1993 the Uruguay Round negotiation on General Agreement on Tariffs and Trade (GATT), with some sensitive issues on agricultural products, reached final agreement based on comprehensive tariffication. Thereafter GATT was dissolved to establish the World Trade Organization (WTO) for the purpose of strengthening its function. The movement towards trade liberalization is active in Asia and the Pacific region, too.

However, widespread concern about the effects of trade liberalization on regional agricultural production has been growing. Improving the economy of the agricultural sector and increasing farmers' income are the priority of all countries in the region. It is expected that these countries would take measures to support their domestic agriculture, especially the small-holder sector affected by trade liberalization.

The extent and direction of impacts of trade liberalization of agricultural products differ by country and product. In order to smoothly proceed with the adjustment process towards more liberalized economic environments, the effects of trade liberalization, especially those on the small-holder sector, need to be identified and analyzed. This project aims at identifying the changing international trade of agricultural products and characterizing the economic situation in rural communities in selected Asian countries in the process of trade liberalization. Furthermore, it will specify policy options for improving the welfare of farmers.

Objectives

The main objectives of the project are:

- To identify the international trade of agricultural products in the region under liberalized market conditions;
- To characterize the situation and prospect of agriculture in selected Asian countries with special attention to the effects of trade liberalization;
- To specify policy options for improving farmers' income in the process of trade liberalization; and
- To provide concerned policy-makers and researchers with discussions and suggestions on the above findings.

[*] CGPRT Centre, Bogor, Indonesia.

Components of the study

The project consists of analyses on institutional aspects and commodity aspects. It analyzed not only macro level aspects but also intermediate and micro level aspects.

The project analyzed both sides of trade, i.e. export and import, as the participants are exporting and importing countries. In addition to export agricultural products, imported agricultural inputs are important. The project stressed producers, especially small farmers. The consumers' viewpoint was also added.

With its limited resources, the project did not develop any world-wide commodity projection models nor any country's trade projection models. By nature the project was more concerned with medium and long-term effects than short-term ones. Efforts were made to draw very practical information and lessons so that policy-makers, producers and exporters could get direct benefits from this collaborative research. Mathematical complication was avoided.

Since this project was conceived and started before the current currency and economic crisis began in the middle of 1997, the analysis handled basically the period before the crisis with current information where possible.

The project consists of the three studies as follows:

1. Institutional study on international agricultural trade liberalization (Institutional study).
2. Study of trade liberalization on commodities (Commodity study).
3. Study on effects of trade liberalization on local agriculture (Location-commodity-specific agriculture study).

The institutional study and the commodity study analyzed mainly macro level aspects. On the other hand, the location-commodity-specific study analyzed mainly intermediate and micro level aspects.

The institutional study attempted to highlight and analyze institutional aspects of trade liberalization. The study may include reviews/analyses on:

- History of trade regime;
- Trade regime at present and towards 2000 or 2004 (government policies, etc.); and
- Infrastructure related to foreign trade.

History of the trade regime intended to include at least ten years time span and, if possible, a longer time span is preferable. Trade regime may include government policies, tariff structure, non-tariff restrictions, trade trends, exchange rate, etc. related to trade liberalization. Existing regulations on agricultural trade and counter measures taken by government in favour of trade liberalization may be included.

Trade regime at present and towards year 2000 or 2004 includes GATT Agreement and related government policies and predictions. A schedule of transformation of trade policies may be included.

Infrastructure related to foreign trade may include transportation, physical facilities, packaging, sanitary and phyto-sanitary, and technical barriers to trade.

The commodity study attempted to highlight and analyze effects of trade liberalization on commodities. The study may include reviews/analyses on:

- Both sides of international trade, namely export and import should be analyzed as there are exporting countries and importing countries;
- International trading patterns for commodities;
- International trade performance of commodities; and
- Imported inputs (seeds, fertilizers, pesticides, etc.) to commodities.

The export and import structure of selected agricultural products in related countries was reviewed and their prospects under further liberalized economic environments were studied. A trade matrix may be included.

The location-commodity-specific agriculture study attempted to highlight effects of trade liberalization on location-commodity-specific agriculture especially that of small farmers.

The study may include reviews/analyses on:

- Effects on location-commodity-specific agriculture.
- Effects on location-specific agriculture.

'Locations' in this study may be called intermediate and micro levels. They may be province, village and farm levels.

Location-commodity-specific agriculture stresses the commodity. For example, 'soybean-producing village' and 'rice- producing farm'.

Agriculture which produces several commodities under a cropping pattern may be examined in location-specific agriculture.

Commodity coverage

In view of diversified production and trade patterns by country, the commodity coverage was not the same in all countries.

The commodity study was expected to study rice and one, two or three of the major commodities (maize, soybean, cassava and wheat). In addition to the above a few country-specific minor commodities were expected to be analyzed. They included other CGPRT crops, vegetables, fruit, spices, beverages and feed crops. Relations between livestock products and feed especially imported feed were examined.

In selection of commodities at least one commodity benefiting from trade liberalization and one harmed by it were expected to be included.

In the location-commodity-specific agriculture study commodities expected to be analyzed were similar to those in the commodity study.

The institutional study was expected to cover as many commodities as possible including commodities expected to be studied in the commodity study and location-commodity-specific agriculture study.

Analytical methods

Both qualitative and quantitative analytical methods were applied. In the institutional study, qualitative analysis prevailed. In the commodity study, simple quantitative analysis prevailed. However, qualitative analysis might be possible. In the location-commodity-specific study both the case study and simple quantitative approaches were used.

In the institutional study, some trade-related indicators were expected to be included in the description. In the future trade regime predictions by quantitative methods which were made by the expert or some other sources were included.

In the commodity study to simplify the analytical structure and reduce unnecessary workloads, simple welfare analysis methods with demand and supply elasticities were used. It was sufficient to review past qualitative analysis and quote the results.

However, if analyses using more sophisticated and complicated quantitative methods were possible their results were added.

In the location-commodity-specific agriculture study, the case study approach by qualitative methods were used and/or partial cost analysis or partial budgeting analysis was used.

Brief record of project implementation

- Upon arrival of the project leader (PL), in March 1997, the TradeLib project operationally began. The PL worked under the direct supervision of the programme leader of the research and development programme and supervision of the director of the CGPRT Centre. Dr. Boonjit Titapiwatanakun, Kasetsart University, Thailand, participated as the regional advisor (RA) throughout the project implementation.
- As part of preparation for the planning meeting, a preliminary discussion meeting with four senior agricultural economists from India, Indonesia, Pakistan and Thailand was held at the Centre on 16-17 June 1997. At the meeting, the project implementation framework was critically discussed in detail. The comments and advice were included in the materials for the planning meeting.
- Ten participating countries nominated their national experts (NEs). The following countries participated: China, India, Indonesia, Japan, Malaysia, Pakistan, the Philippines, the Republic of Korea, Thailand and Viet Nam.
- Project implementation was divided into two phases, the first phase April 1997-June 1998 and second phase July 1998-December 1999. In the first phase, the first study was mainly performed and in the second phase the second and the third studies were performed. The first study was reported in the first country report and the second and the third studies were included in the second country report.
- A planning meeting for the first phase assembling the NEs, the PL and the RA was held on 27-28 August 1997 in Bogor. The NEs made an introductory presentation on the current situation of research and special interests in their countries on trade liberalization. All participants discussed a detailed framework of project implementation, including aspects of their study work plan, commodity coverage, analytical methods and composition of reports. The PL visited Viet Nam in November to further discuss and finalize the detailed workplan with the NE, related researchers and officers. Also a separate planning meeting for China was held in July 1998 in Bangkok.
- The following interim reviews were made:
  - Japan: 19-23 January 1998.
  - Malaysia: 8-14 February 1998.
  - Republic of Korea: 4-11 April 1998.

  In each interim review, the draft country reports for the first phase were discussed in detail. General issues related to trade liberalization were discussed to elaborate the country studies in each country. Visits were paid to project-related sites.
- A draft report meeting for the first phase was held on 5-6 May 1998 in Bogor. The NEs presented their country studies. All participants were requested to revize their draft reports.
- The first country reports were published in ten volumes in the Centre's Working Paper series.
- A planning meeting for the second phase was held on 7-8 May 1998 in Bogor. The NEs made an introductory presentation on their studies for the second phase. A detailed framework of project implementation including aspects of work plan, commodity coverage, selection of study sites, analytical methods and composition of reports were discussed.

- The following interim reviews were made:
  - Thailand: 20-25 July 1998
  - Indonesia: 29 September-3 October 1998
  - Pakistan: 8-15 November 1998
  - The Philippines: 6-12 December 1998
  - Viet Nam: 10-16 January 1999
  - India: 31 January-6 February 1999
  - China: 21-31 March 1999
- A draft report meeting for the second phase was held on 13-15 April 1999 in Bogor. The NEs made presentations of their country studies. All participants were requested to revize their draft reports.
- The Regional Workshop on the project was scheduled to be held during 5-8 October 1999 in Bogor.
- At the CGPRT Centre, the integration of the country reports is being carried out by the PL with the advice of RA. Major findings will be distributed for discussion.
- Publication of the second country reports is being carried out in the Centre's Working Paper Series. The integrated report and the proceedings of this workshop will be also published in due course.

Agricultural Trade Liberalization in China

Jikun Huang and Chunlai Chen[*]

Reform and trade in the agricultural sector

Reform and trade liberalization in China's external sector, because of its strategic role in the economy, has proceeded gradually. Gradual trade liberalization in step with reforms in the other sectors of China's economy has its logic. In the initial stage, reformers only implemented measures that provided incentives to sets of corporations and institutions. They did not alter or only partially altered the institutional structure that was set up to achieve the objectives of foreign trade in national industrialization, economic growth, and national security (i.e., food self-sufficiency in the agricultural sector). As experience gained from the reforms grew and the objectives of trade could be achieved through alternative settings of institutions and policies, trade liberalization has processed smoothly since the late 1980s.

In the past 20 years, the study shows that China's foreign trade regime has gradually changed from a highly centralized, planned and import substitution regime to a more decentralized, market-oriented and export promotion regime. The reforms of the economy in general and international trade in particular have significantly impacted on the economic structure and patterns of international trade in China.

The changing pattern of comparative advantage within agriculture is consistent with China's resource endowments. China was a net exporter of labor intensive and labor/capital intensive agricultural products, such as horticultural products, animal products and processed agricultural products, and was a net importer of land intensive agricultural products such as grains, cotton, and edible vegetable oils in the past. The study also shows that since 1985, when external trade reform started, the patterns of China's agricultural trade, particularly the patterns of agricultural exports, have been gradually moving more closely towards reflecting China's resource endowments.

However, this study also reveals that room for further liberalization exists in terms of limiting non-tariff measures to control agricultural imports, further commercializing state trading, and improving the efficiency of foreign trade management. Recently, China has decided to take further trade liberalization in the coming years. China applied to join GATT and then the World Trade Organization (WTO) in 1986. Although China has not been accepted as a member of the WTO, China has committed to comprehensively implement the Uruguay Round agreements upon its accession into the WTO.

With 13 years negotiation on China's WTO accession, particularly the recent progress made between China and the United States, it is likely that the time to make a decision on China's joining the WTO will come soon in the interest of China and all its trade partners. The sheer size of China's economy and its rapid growth will make China a crucial player in the future development of world markets for inputs and outputs of food and agricultural products, agribusiness, and industry.

While the negotiation is still ongoing, there has also been growing concern about the impacts of China's accession to WTO on China's domestic agricultural production, prices and

[*] Center for Chinese Agricultural Policy, Chinese Academy of Agricultural Sciences, Beijing, P.R.C.

markets, employment and the farmer's income, particularly in the short term. Some researchers claim that the impacts of China's accession to the WTO on China's agricultural production and trade are marginal. Others believe that while both China and the rest of the world will benefit from China's WTO accession for the economy as a whole, the impacts of trade liberalization on China's agricultural sector should not be understated.

Impacts of trade liberalization on China's agriculture at the aggregate level

Defining projection scenarios and overview of results

China's ability to feed itself in the 21st century has been widely discussed in the literature. The most striking feature of the projections of food surpluses and deficits is their wide range. Such a wide range of food economy predictions is perplexing. China's emergence as either a major importer or a major exporter could have enormous consequences for world grain markets and prices. Moreover, most previous studies assume that China's current trade policies will be continued in the future. The evidence from the most recent work indicates that China will face a great challenge in achieving its food security in a more liberalized economy.

Based on a projection model developed at the Center for Chinese Agricultural Policy (CCAP), CCAP's Agricultural Policy Simulation and Projection Model (CAPSiM), several policy scenarios are formulated. The impacts of trade liberalization on China's agricultural demand, supply, trade, prices and welfare in national aggregate level and employment as well as farmers' income at the local level are projected and estimated.

The scenarios formulated for simulation analysis include baseline, free trade, and free trade with increasing productivity enhancement investment scenarios. A baseline scenario assumes that China will continue its current domestic and external policies and not join WTO in the future. In contrast to the baseline scenario, a free trade scenario assumes that China will continue liberalizing its agricultural sector and reach a free trade environment for most agricultural commodities by the year 2005. This represents a maximum impact of trade liberalization on China's agriculture. The actual impact of trade liberalization and China's joining WTO on domestic agriculture will be in-between the simulation results of the baseline and the free trade scenarios.

In order to provide long-term prospects of China's food security under a free trade regime, we project China's food supply, demand and trade toward 2020 under a free trade scenario without and with progressive improvement in agricultural productivity enhancement investment. The later scenario assumes that the annual growth rate of agricultural research expenditure will be 50% higher than the baseline assumption (rising from 4% to 6%).

Our simulation results on trade liberalization conclude that the producers of most crops (except for rice and horticulture) will lose income from their farming activities not only because of a decline in the price received by the farmers, but also a reduction in production. Most animal product producers, particularly the farmers raising hogs and poultry, will benefit from trade liberalization as the export demand increases the livestock price and surging maize import lowers the feed price.

Baseline scenario

Baseline projections of the supply of grain show that China's domestic total grain production will increase from 431.68 million mt in 2000 to 463.78 million mt in 2005 with an annual growth rate of 1.44%. However, the production growth rate falls below domestic grain consumption growth rate (1.60%), indicating a widening gap between domestic supply of and demand for grains. The growth rate of grain production in 2000-2005 will be much lower than

the growth rates obtained in the 1980s and 1990s, evidence of the impacts of declining public investment intensity in agricultural R&D since the mid-1980s. The grain net imports will rise to nearly 20 million mt in 2005 (Table 1). Despite the increase in the grain import in the period of 2000-2005, the grain self-sufficiency level will remain as high as 95-96% in the early 21st century (Table 2).

In the livestock and aquatic sector, the increases in domestic production nearly match the increases in demand. The annual production growth rates of various animal products will range from 3% to 7% in the period of 2000-2005; these growth rates are equivalent to the growth rates of demand for these products in the same period. The sector will continue to be an exportable one, but the amount of exported livestock products and fish is very small compared to the size of the total domestic production or consumption (Table 1).

Pork accounts for about 70% of meat or nearly 90% of red meat consumption. Its demand will rise from 23.20 million mt in 2000 to 27.46 million mt in 2005 with an annual growth rate of 3.43% in 2000-2005 (Table 1). Under the baseline scenario, pork production is also projected to grow at 3.39% annually, a growth rate close to the demand growth. The trends of production, consumption and trade of beef and mutton are roughly the same as for pork.

Poultry and milk are the only two animal products that require import (4-5% of domestic consumption) to meet the increasing demand. Poultry consumption will rise from 6.29 million mt in 2000 to 7.89 million mt in 2005 with an annual growth rate of 4.61%. Because domestic poultry consumption is higher than domestic poultry production in the base year, although the growth rate of poultry production is slightly higher than that of poultry consumption, China will still be a net poultry importer in 2000-2005. The annual import of poultry will be around 0.25 – 0.29 million mt in 2000-2005. Milk import will present a slightly increasing tread, rising from 0.30 million mt in 2000 to 0.33 million mt tons in 2005, accounting for 3.4% of total consumption (Table 1).

Free trade scenario

Under free trade scenario, domestic grain prices (except for rice) will fall. The fall in the domestic price of grain raises grain consumption and slows down the production. Our projection shows that China's domestic grain production will fall far behind domestic grain consumption under the free trade scenario. Compared to the baseline scenario, the grain deficit between domestic supply and demand will be further enlarged. China's net grain imports will increase to 59.61 million mt in 2005, a level representing about 12% of the total grain consumption in China (Table 1). Compared with the baseline scenario, China's domestic grain production will decline by 10.63 million mt (or 2.3%), while China's domestic grain consumption will increase by 29.28 million mt (or 6.0%) in 2005.

The most serious impacts of trade liberalization on grains are on maize, then followed by wheat and soybean. Under the free trade scenario, China's domestic maize production will fall far behind maize consumption. Production will grow annually by 0.69% only, while consumption will grow by 5.91% as a result of the decline in maize price and surging feed demand for livestock production expansion after trade liberalization. Consequently, imports of maize will increase dramatically to 39.31 million mt (nearly one quarter of maize consumption in China) in 2005 (Table 1). China would likely be the world's largest importer of maize in the coming years if the sector is completely liberalized. In the year 2005 when trade liberalization is completed, the net impacts of trade liberalization (relative to baseline) on maize production, consumption, and trade will reach the highest levels at -10.42 million mt (a reduction of 7.8%), 20.21 million mt (an increase of 14.2%), and 30.62 million mt (an increase of 3.52 times), respectively (Table 1).

Although wheat is a food grain and the food grain consumption response to the price change is weaker than that of feed grains, the impact of trade liberalization on wheat is also substantial. Wheat production is projected to be only 110.46 million mt in 2005, 5.06 million mt (4.4%) lower than that in the baseline projection (Table 1). By 2005, the wheat import will rise sharply from the 11.73 million mt in 2000 to 22.26 million mt in 2005. Compared with the baseline projections, wheat consumption under the free trade scenario will tend to increase by 7.28 million mt (or 5.8%) in 2005. And the net impacts of the free trade verses the baseline scenario on wheat import will be as high as 12.34 million mt (rise from 9.92 million mt to 22.26 million mt) in 2005.

Soybean is the other grain crop that will be affected significantly by trade liberalization. By 2005, soybean consumption will reach 16.10 million mt (5.4% higher than the baseline scenario), about 9% higher than its production (14.79 million mt, or 4.3% lower than the baseline). Soybean net imports will reach more than 1.3 million mt or about 8% of domestic soybean consumption in 2005 (Table 1).

Rice is the only crop within grains that will benefit from trade liberalization. Under the free trade scenario, rice production will reach 144.65 million mt in 2005 (Table 1). Meantime, the increase in the rice price reduces per capita rice consumption. Combined impacts of production and consumption imply that the impact of trade liberalization on rice export is substantial (7.12 million mt in 2005).

The impacts of trade liberalization on China's animal sector are also significant. But in contrast to the grain sector, trade liberalization will raise domestic prices of pork and poultry substantially, with a moderate rise in the prices of eggs and fish. The increase in the prices of these major animal products and the decrease in the feed price resulting from trade liberalization will stimulate domestic production of these products on the one hand, and dampen their consumption on the other hand. Livestock and fish product exports will expand considerably (Table 1).

Table 1 Impacts of trade liberalization (free trade) on China's agricultural production, consumption, and trade ('000 metric tons) in 2005.

	Baseline Scenario			Free Trade Scenario		
	Production	Consumption	Net import	Production	Consumption	Net import
Grain	463,777	483,577	19,799	453,145	512,753	59,608
Rice	138,908	139,690	782	144,652	138,313	-6,339
Wheat	115,519	125,440	9,921	110,458	132,721	22,263
Maize	133,209	141,898	8,689	122,793	162,105	39,312
Soybean	15,459	15,278	-181	14,792	16,102	1,310
Pork	27,703	27,462	-241	31,984	25,727	-6,257
Beef	3,015	2,998	-17	3,090	3,119	29
Poultry	7,595	7,885	290	8,683	7,502	-1,181
Milk	9,364	9,697	333	8,888	11,716	2,828
Fish	15,081	14,909	-172	15,721	14,581	-1,140

Note: Consumption (or demand) includes stock changes.
Source: Huang and Chen 1999.

For example, under the free trade scenario, China's domestic pork production will increase from 23.12 million mt in 2000 to 25.73 million mt in 2005 (Table 1), with an annual growth rate of 6.33% (3.39% under the baseline scenario). At the same time the pork consumption annual growth rate will decline from 2.43% in the baseline to 2.16% in 2000-2005. The impact on the pork export will reach 6.0 million mt in 2005.

A similar large impact of trade liberalization is found for the production, consumption and trade of both poultry and fish simply because of the changes in the poultry prices. The only product that will be significantly and adversely affected by trade liberalization is milk. About one-quarter of the milk consumption will have to be imported from the world market after 2005, compared to about 3% only of imported milk in the baseline scenario.

Impacts on China's grain self-sufficiency, welfare, and employment

Food security has been and will continue to be one of the central goals of China's policy. While food security has many dimensions, one of the targets that was set by the Chinese government recently is to achieve a grain self-sufficiency level at or above 95% in the future. Table 2 presents China's grain self-sufficiency rates under three scenarios for the period of 1995-2020.

Table 2 Grain self-sufficiency rates (%) under various scenarios, 1995-2020.

	1994-96	2005	2010	2020
Baseline				
Total grain	98.1	95.9	96.1	96.9
Rice	99.7	99.4	99.9	101.3
Wheat	92.2	92.1	95.1	99.7
Maize	101.4	93.9	91.3	89.8
Soybean	100.1	101.2	101.9	102.9
Free trade				
Total grain	98.1	88.4	89.9	92.1
Rice	99.7	104.6	107.1	114.7
Wheat	92.2	83.2	88.3	96.9
Maize	101.4	75.7	74.4	72.2
Soybean	100.1	91.9	94.4	95.5
Free trade with raise in agri research expenditure				
Total grain	98.1	88.4	90.4	97.2
Rice	99.7	104.6	107.6	119.5
Wheat	92.2	83.2	88.8	102.1
Maize	101.4	75.7	75.0	77.7
Soybean	100.1	91.9	95.0	100.7

Source: Huang and Chen 1999.

Our study shows that a completely liberalized economy in the short term will challenge the current food security goal defined by the government. China's grain self-sufficiency rate will decline rapidly from 98% in the mid-1990s to less than 90% in 2005, if the free trade regime is assumed by the year of 2005. However, it is worth noting that this is an extreme case, representing a maximum impact of trade liberalization on China's grain economy. The actual impacts of China's joining the WTO will be lower than the results from this free trade scenario.

In the long term, our study shows that the most effective policy that could improve China's food security and raise grain self-sufficiency level is to increase agricultural productivity enhancing investment such as agricultural R&D, rural and agricultural infrastructure and irrigation. If these policies are formulated properly, China could achieve its grain self-sufficiency target in the second decade of the next century even if the grain market is completely liberalized in 2000-2005.

The welfare analysis of this study reveals that trade liberalization will generally be unfavorable to grain producers while favorable to livestock and fish producers in China. In terms of consumers, trade liberalization will raise their welfare in grain, while reducing their welfare in the meat sector. For overall social welfare, our study shows that the social welfare

gained from liberalization within the agricultural sector is minimal, but the welfare changes differ significant among agricultural products, between producers and consumers and over time.

The impacts of trade liberalization on agricultural employment in this study are surprisingly lower than those found in the other studies for China, but are consistent with the actual employment changes observed in Mexico and other developing countries during the period of liberalizing their economy. A significant impact of trade liberalization is found for maize and wheat. Maize production would lose employment by more than 2.3 million and wheat by 1.14 million in 2000-2005. The employment expansion in the rice and livestock sectors will not be able to fully offset the decline in employment in the crop sector. For agriculture as a whole, a rough estimate of the reduction in employment due to trade liberalization is about 2.5 million in the period of 2000-2005.

Impacts of trade liberalization on agriculture at the farm level

The impacts of trade liberalization at the farm level are examined based on a partial budget analysis for rice, wheat and maize, the three most important crops in China. The results show that the rice farmers in China will be one of the few winners within the agricultural sector in the process of trade liberalization. The gains come essentially from the rise in the domestic rice price and, at the same time, the decreased production cost as most agricultural input prices will fall with trade liberalization. These gains from liberalization are found for all rice producers in China, but the gains vary among provinces and by variety.

The partial budget analyses also demonstrate that wheat and maize production would be much less profitable after trade liberalization. Farmer's income from wheat and maize production will decline with trade liberalization as the large decline in output prices will not be compensated for by the cost reduction from cheaper imported agricultural inputs. Most maize and wheat farmers in southern China might record a negative profit if the opportunity costs of family labor are accounted for in these crop productions.

Policy implications

Based on the findings of this study, a number of policy recommendations are made. The study calls for a greater role for the market to determine trade patterns in order to reap comparative advantage gains in the course of trade liberalization. Policy steps to achieve comparative advantage gains include removing implicit taxes on farmers and reforming the domestic grain pricing and marketing system.

Further commercialization of the state trading system will improve the efficiency of foreign trade under a more liberalized economy. This is essential for China to maximize its potential gains in some sectors and/or to minimize its likely losses in other sectors of the economy due to trade liberalization. Improved grain handling, internal transport, and external port capacities will be the other important areas for policy intervention.

This study also calls for a revision of grain self-sufficiency policy. If the food grain self-sufficiency concept, instead of the total grain self-sufficiency, could be adopted by the policy-makers, China would benefit greatly from realizing its full gain in trade liberalization by shifting more land from the production of feed grains to exportable products (i.e., horticultural products).

To maintain a high level of food security and keep the comparative advantage of China's agriculture from declining as much as we have projected under the free trade scenario, China has to substantially raise its investment in agricultural research and extension, irrigation, and

other productivity-enhancing activities. This is one of the most effective measures to reduce China's grain imports and expand labor intensive agricultural product export.

Policies recommended for China to minimize its short-term shock from trade liberalization include measures that could be adopted under the WTO's framework such as setting an adequate minimal market access level, a reasonable level of the above-quota tariff, an acceptable length of transition period, and a moderate depreciation of the domestic currency.

New policies to assist farmers in adjusting their production and employment structure and to set up a better tax and income re-redistribution system are also suggested. This is particularly important for those poorer farmers whose income mainly depends on crop production.

Access to credit and market information is the other important factor that will help farmers get re-employment in other sectors. A further effort is needed to assess the consequence of trade liberalization on China's agriculture and farmer's income in a more detailed manner and to increase the awareness of policy-makers and farmers concerning China's agriculture and trade liberalization.

Comments on the Chinese Country Report: Trade Protection or Free Trade in the Agricultural Economy of China?

Chen Dongsheng[*]

Whether or not China can join WTO at the end of this year, China will become a very important player in international trade in the next century. The large China market potential and the fast economic growth attract great interest in China from around the world. Many studies on the effects of trade liberalization have shown that both the rest of the world and China will benefit from China's accession to WTO in the long run. Obviously, China should participate actively in international trade for its own benefit. How to meet the challenge of global trade liberalization and change the challenge to opportunity to sustain economic development is a hot topic for Chinese policy-makers.

Because of the huge population and the importance of the agricultural economy in China, in the process of trade liberalization, the priority concern of both Chinese policy-makers and farmers has been how to sustain agricultural growth, achieve food security, and increase farmers' income. The impacts of trade liberalization on China's agricultural production are under heated debate. Although many researchers have done a lot work on this subject, most previous studies lack comprehensive and quantitative analysis and focus on general descriptions and qualitative analysis at the country level. The country report of China, however, is the first study that uses a partial equilibrium model and a partial budget analysis method to deal with the impact of trade liberalization both at the country level and at local and farmer levels. It provides more accurate, precise and strong arguments on the impacts of trade liberalization on China's agricultural production based on CAPSiM and a lot of valuable insights about future policy making in China. It clarifies many misconceptions about China's agricultural trade policy and points out that if proper strategies are adopted, China can not only meet the challenge of trade liberalization on agriculture in the short run but also benefit from trade liberalization in the long run. The country report of China builds a strong base for future agricultural policy formulation in China.

Like other countries, China's agricultural policy serves to promote agricultural production, increase farmer's income and achieve food security. Because China has 1.2 billion people and a small per capita resource base, the Chinese government gives high priority to food self-sufficiency. Self-sufficiency in grain is regarded as the number one objective of agricultural policy. When plotting the direction of future agricultural policy, some policy-makers are worried that trade liberalization of the agriculture sector, especially in grain markets, may increase instability of the domestic market, threaten its food security, worsen income equity and create difficult adjustment problems for Chinese farmers. This worry is understandable but lacks grounds for the conclusion that agriculture should be exempted from trade liberalization. Careful analysis of the experience and lessons China got from the past twenty years of reform in the agricultural sector will prove that, if trade liberalization in the agricultural sector in China is appropriately introduced, it will help to raise domestic productivity, increase food security and

[*] Township Enterprises Management College, Ministry of Agriculture, P.R.C.

promote income growth. From the China country report, we can increase confidence in this point.

Introduction of a protection policy in the agricultural economy is not rational

After twenty years of market-oriented reforms, China successfully solved food shortage problems in most parts of the country. The implementation of the household responsibility system and open markets for agricultural products made great contributions to rapid agricultural economy growth in the past two decades. This achievement confirms for many people that market-oriented reform is the right policy direction that the government should continue to pursue in the future.

Although reform in the agricultural sector before 1984 has been largely successful, the process of market-oriented reform after 1985 was not smooth. After grain production growth slowed down in 1985, China experienced grain supply shortage and fluctuations in the late 1980s and the early 1990s and the high inflation risk induced by food price increase in 1994. Against this background, some agricultural economists and officials stress the special role that agricultural products, especially grain, play in China's economy and advocate that China should follow other countries' experiences and introduce a protection policy and strengthen government intervention in the agricultural economy in order to achieve food security.

If agricultural performance after 1985 is analyzed carefully and rationally, one can find that the problem is not caused by the direction of market reform, however; it is induced by the incompleteness of market reform. The household responsibility system provides incentive for farmers to increase inputs in agricultural production, but the equal division of land among farmer families decreases farmer's incentive to increase investment in land so agricultural production could not achieve economy of scale. While removing the unified purchase marketing system and introducing free markets, the government did not build effective measures to cushion the economy from large fluctuations. As it happened, the Chinese government resumed its old administrative measures. It was government intervention that blocked the integration of domestic markets and actually magnified market fluctuations, increased uncertainties in markets and made difficulties for consumer and producer decision-making. Although the open policy was one of the major reforms contributing to rapid economic growth, agricultural trade was largely monopolized by state agencies, which lacked incentives and efficiency.

The country report of China gives a strong argument that lack of freedom to trade is the main reason that induced the above problem. China has no competitive advantage in land-intensive agricultural products. Experience suggests that China's discriminating agriculture policy came to an end in the early of 1990s. In 1994, China's domestic grain price exceeded international prices. If China adopts an agricultural protection policy to achieve grain self-efficiency, agricultural product prices will go up continually and China's valuable land resources will be restricted and wasted for grain production and farmers' income will grow slowly. If China tries to achieve grain self-sufficiency with a protection policy, the government will pay a high price and delay the adjustment process according to China's resource endowment. So the right choice is to take further steps in trade liberalization.

Chinese farmers can adapt in the process of trade liberalization

The key component of reform in china is giving back the planting right to farmers. Under the household responsibility system, farmers have freedom in decision-making. Following reform of the whole economy, Chinese farmers actually respond to market signals and have been starting the adjustment process to maximize their welfare. Because land is limited and land circulation is difficult, farmers have been looking for new opportunities to increase their income by diversifying agricultural activities and conducting non-agricultural activities. The fast growth of township enterprises has accelerated the urbanization process, increased farm incomes and improved farmers' lives.

In the country report of China, the discussion of the patterns of China's agricultural trade has revealed two main points. First, in terms of the aggregate level, the pattern of China's agricultural trade is consistent with China's domestic resource endowments. China was a net exporter of labor intensive and labor/capital intensive agricultural products, such as horticultural products, animal products and processed agricultural products, and a net importer of land intensive agricultural products, such as grains, cotton, and edible vegetable oils. Second, in terms of the changing trend, there are reasons and evidence to argue that over the past two decades the patterns of China's agricultural trade have been moving more closely towards playing its comparative advantage especially in exporting more labor intensive and labor/capital intensive agricultural products. These two points indicate that Chinese farmers have not only the ability to adapt in the process of trade liberalization but also can reap competitive advantage gains from trade liberalization.

With proper strategies, China can achieve food security from trade liberalization

Based on CAPSiM, the author of the country report made a nice analysis of the effects of trade liberalization on China's agricultural production, product prices and the food self-efficiency objective. Comparing the baseline scenario with the free trade scenario, one can see in the short run China will face a great challenge in maintaining the grain self-efficiency objective set by the current government. Farmers whose income mainly comes form grain production will suffer from income reduction, if trade liberalization is introduced. In the long run, however, farmers who operate in livestock activity or horticulture activity will benefit from trade liberalization and concentrate resources to China's endowment. Although the study shows that social welfare gained from the liberalization within the agricultural sector is minimal, welfare changes differ significant among agricultural products, between producer and consumer and over time. If the government increases agricultural productivity enhancing investment, China can achieve food security from trade liberalization in the short run as well as in the long run.

The gradual approach is preferable

From the country report of China, one can also conclude that it is not in the international community's interest to exclude China from international trade arrangements. The East Asia experience in the past decade has demonstrated that those who co-operate closely and trade intensively with China benefit greatly from China's rapid growth. Because Chinese farmers are the smallest in the world and are very vulnerable in the adjustment process, the giant economy

should help China to smooth the process of trade liberalization. Given China's current institutional settings and income level, it is impractical and unfair to require China to meet all the industrial economy standards. The international community can only benefit from taking a more positive attitude to accommodating China in the world economy. As in the past reform process, China should be allowed to adopt a gradual approach, not a therapy approach, to implement its trade liberalization process.

Further analysis is needed

The China report uses CAPSiM purposely and carefully in the study. Although CAPSiM is enough, reasonable and feasible for the analysis of the effects of trade liberalization on agriculture, like other partial equilibrium models, it ignores interactions between the agricultural sector and other parts of the economy and cannot capture feedback effects of policy changes. For example, it does not simulate the impacts of China's agricultural trade changes (due to trade liberalization) on world prices. A surge in China maize and wheat imports is expected to cause a large shock on world grain prices. This, in turn, will have secondary impacts on China as well as the world's grain production, consumption and trade. Therefore, a further study that could link China's domestic market with international markets is needed in order to have a better understanding of the dynamic nature of trade liberalization.

Effects of Trade Liberalization on Indian Agriculture

Ramesh Chand[*]

Agriculture is described as the backbone of the Indian economy as it constitutes the largest share of the country's national income and provides employment to about two-thirds of the workforce of the country. Agriculture in India is in the hands of millions of peasant households, the bulk of which comprise tiny land holdings with a preponderance of owner cultivation.

Agricultural policy during the last four and one-half decades after attaining independence form British colonial rule can be broadly distinguished in three phases. The period from 1950/51 to the mid 1960s witnessed tremendous agrarian reform, institutional changes and development of major irrigation projects. Intermediary landlordism was abolished and tenant operations were given security of farming and ownership of land. Land ceiling acts were imposed by all states to eliminate large-sized holdings, cooperative institutions were strengthened and land consolidation was also affected to reduce the number of land fragments.

The second phase is marked by spread of high yielding varieties of wheat and rice, which involved use of fertilizers and irrigation, also known as green revolution technology. Although green revolution technology made inroads only in well endowed region, it produced quick results in raising agricultural output and attaining near self-sufficiency in foodgrains.

The third phase in Indian agriculture began in the early 1980s. While there was a clear change in economic policy towards delicensing and deregulation in the industrial sector, agriculture policy lacked direction and was marked by confusion. There was a considerable increase in subsidies and support to the agricultural sector during this period under pressure from farmers' lobbies while public sector spending in agriculture for infrastructure development started showing a decline in real terms. The output growth which was hitherto concentrated in very narrow pockets became broad-based and got momentum. The rural economy started witnessing a process of diversification which resulted in fast growth in non-foodgrain output such as milk, fishery, poultry, vegetables and fruits, which accelerated growth in agricultural GDP during the 1980s. This growth seems largely market driven.

In 1991, India embraced a new economic policy in the wake of compelling domestic reasons like serious fiscal disorder and a severe balance of payment crisis. The new policy involved exchange rate adjustment through devaluation of the currency, reduction of fiscal deficit and dismantling of the barriers to the free flow of foreign capital. This period coincided with the new GATT treaty, which makes it obligatory for member countries to reorient their domestic as well as external trade policies consistent with the GATT agreement,

A new export-import policy for 1992-1997 was also announced. Agricultural exports and imports in the country were until recently strictly regulated through quantitative restrictions such as quotas and licenses or channeled through some trading organizations or a combination of both. With the new trade policy initiated in 1991, the country started relaxing restrictions on agricultural exports as well as imports. The trade liberalization policy provided impetus to

[*] National Centre for Agricultural Economics and Policy Research, New Delhi, India.

agricultural exports, which registered remarkable growth during the last 4-5 years. Export of agricultural and allied products rose from $3,029 million in 1992/93 to $ 6,759 million during 1996/97.

Economic reforms introduced in India since 1991 and policy changes effected in the light of obligations to WTO initially focused mainly on industry. Nevertheless the agricultural sector has been affected by the reforms through adjustment of exchange rates, which has a bearing on agricultural exports and on input-output prices. The government has taken bold initiatives during the last 5-6 years to promote farm exports. India is also adjusting, albeit slowly, its policies to meet WTO requirements. The export-import policy for the period 1997-2002 further liberalized import and export of agricultural commodities.

The policy of trade liberalization shows clear positive impacts on the export of non-Basmati rice, marine products and oilmeal. Total agricultural exports in a short span of 3-4 years after economic reforms more than doubled. This is a clear indication that the indirect effect of trade liberalization, exchange rate adjustments and effects of relaxation in government controls and restrictions on agricultural exports is positive.

Import of rice in value terms declined from $170 million in 1989/90 to nil in recent years. However, India continued to be an occasional importer of sizeable quantities of wheat following poor domestic harvests. Among all agricultural commodities, oilseeds comprise the largest share in imports in most years during the last decade. This has happened despite a spurt in edible oilseed output in recent years. Nearly half of the agricultural imports consist of fertilizer imports in most years.

There is tremendous year to year variation in India's trading partners and the volume of trade with them for most agricultural commodities. The reason for this is that export of most agricultural commodities is not planned; it is instead residual. Due to lack of planned and sustained export, it has been difficult to maintain a hold on overseas markets.

India continued to have a negative trade balance since the beginning of the era of planned development in 1950/51. The ratio of trade balance to the country's GDP at current prices in domestic currency was close to 3% in 1986/87 and it was 2.23% in 1990/91. The year 1991/92, when economic reforms were started and the rupee was devalued, witnessed a sharp drop in trade deficit to the level 0.69% of GDP. The trade gap further declined to 0.46% of GDP in 1993/94 but showed a sharp rise thereafter. In 1995/96 the trade deficit was 1.66% of GDP which showed further deterioration in the next year.

There has been a constantly rising trend in proportion of GDP exported during the last 11 years. From a modest level of around 5%, the ratio of export to GDP rose to about 8% in 1991/92 and gained further momentum as economic reforms progressed. At present, the country's export accounts for more than 9% of its GDP. The ratio of import to GDP also followed a rising trend, but growth in imports was lower than the growth in exports when we consider the entire period from 1985/86 to 1996/97. The ratio of imports to GDP has risen from around 8% during the late 1980s to 11% in recent years.

Agricultural exports comprise about 20% of the total exports from India, while agricultural imports constitute 6-8% of total imports. Agricultural imports constitute 6-8% of total imports. The proportion of agricultural exports in agricultural GDP remained below 6% till 1994/95 and above that in subsequent years. The share of agricultural imports in agricultural GDP in recent years ranged between 2-3%.

Agricultural trade of India has been significantly affected by the financial crisis that hit South East Asian economies in 1997. India's agricultural export to the four crisis-ridden countries had been growing rapidly till 1997. During 1997/98 after the crisis hit these economies, India's agricultural exports plummeted by 22% over the previous year. Like agricultural exports there was a marked decline in total export from India to all the four South

East Asia countries, whereas imports from these centuries increased significantly due to exchange rate developments. Exports to the four countries during the period April-December in 1998 declined by almost half over the corresponding period in 1997.

India is a founder member of the World Trade Organization (WTO) and as per India's commitments is moving in the direction of liberalization of trade in agricultural commodities. Quantitative restrictions on imports are being phased out and exports are also being liberalized. Both agricultural exports as well as imports are now permitted through private trade except for a few commodities. There is lot of anxiety, interest and apprehension about the impact that trade liberalization will have on producers of different commodities, consumers and the economy. The present study analysed the impact of trade liberalization on selected commodities and locations and reviews production, marketing and trade-related policy for them. It focuses on four crops namely paddy (rice), maize, chickpea and rapeseed-mustard. Of these, rice is the most important for food security of the country and also for producers. Traditionally India used to export only Basmati rice, but since 1991/92 non-Basmati rice has emerged as a significant export crop. Maize is one of the important coarse cereals grown in India and it occupies an important share in the food basket of poor people. Rapeseed-mustard is the second most important oilseed crop grown in India and it is the major edible oil consumed in the country. There is a chronic shortage of edible oils in the country, which is met through large imports. According to some studies, India does not have comparative advantage in producing edible oilseeds including rapeseed. Therefore, liberalization of trade is expected to encourage imports and decrease domestic prices of rapeseed-mustard. Chickpea is the most popular among all pulses in India. There is a chronic shortage of pulses in the country, which is met through large imports.

The government is the major player in the marketing of rice. Most of the marketed surplus of rice, except of Basmati rice, is procured by official agencies. This is for food security and price stabilization. The case of chickpea is similar. There was no market intervention in oilseeds till 1988. Subsequently, market intervention operations were introduced in edible oils through small procurement by official agencies with the objective of stabilizing their wholesale prices and building stocks during years of surplus production to alleviate the need for heavy imports during lean years. There is a system of minimum support price for all major agricultural commodities to ensure that their market prices do not fall below certain limits. However, in practice, this system has been beneficial to rice and wheat only.

There has been no restriction on export of Basmati rice, although rice was subject to canalization, minimum export price and export quota till 1991. Restrictions on rice export were somewhat relaxed during 1992 following initiation of economic reform programmes. Due to a comfortable situation on the food front, quantitative ceilings on exports have now been abolished. There is no duty on import of rice. There has been no special policy for import-export of maize, nor is this crop considered important from the trade point of view. Like other cereals, maize export and import have been subjected to several restrictions, except for feed grade maize for poultry or animals. There is no duty on import of maize. Prior to 1994 the oilseed sector was protected through QRs on imports and exports and imports were canalized through state agencies. Domestic prices of oilseeds were maintained at more than double the world prices. In 1995 rapeseed-mustard oil was put under OGL at import tariff of 30%. The tariff has been further reduced in stages to the present level of 15%. Despite highly favourable resource cost ratio and high domestic profitability, chickpea area and production did not show any perceptible growth during the last two decades. While chickpea export is restricted, its import is free and is regulated mainly through tariff, which is also quite low at present.

A comparison between domestic and international prices of selected commodities during the recent four years shows that international prices of rice of comparable grade have been more

than one-third higher than domestic prices. There is no clear difference between international and domestic prices of maize; in some years the domestic price is lower and in some years it is higher than the international price. The position of rapeseed-mustard oil is the reverse of rice. Per ton prices of rapeseed-mustard in the country ranged between $3,839.3 and $962.3 during 1994 to 1997, while international prices varied between $557 and $617. In the case of chickpea there is tremendous inter and intra year instability in domestic prices, so it is difficult to say whether international prices are consistently lower/higher than domestic prices.

Comparison of domestic wholesale prices with CIF world prices for importables and FOB world prices for exportables relevant to India reveals that liberalization of agricultural trade would lead to an increase in the export of rice and maize. On the other hand, trade liberalization would lead to large-scale import of rapeseed-mustard oil. Thus, one can expect that because of trade liberalization, domestic prices of rice and maize would go up and that of rapeseed-mustard oil would go down. This may have further adverse effects on rapeseed-mustard area, output and its producers, whereas rice and maize area, output and producers may be affected favourably. In the case of chickpea, it appears that trade liberalization would not have significant impact on domestic prices and production. Import would continue to fill the gap between domestic demand and supply without seriously affecting domestic production.

There is considerable volatility in the international price of rice, whereas the domestic price has maintained a steady trend line. Accordingly, attractiveness for rice export varies considerably from year to year depending upon the behavior of international prices. The CIF price of rapeseed-mustard oil imported by India shows violent fluctuations. In fact this fluctuation is not evident in the international price. The actual CIF price of rapeseed-mustard oil imported by India is found to be quite high compared to imputed CIF price from the international price. The reason for this seems to be that India is not a stable importer of rapeseed-mustard oil and the quantity imported varies considerably depending upon the domestic supply situation. The country does not have a stable trading source or partner for the import and there is not sufficient planning about imports. As a result, when a shortfall is felt in the domestic market, the country resorts to panic buying for fear of a violent rise in domestic prices. With proper advance planning the country can have access to imports at a cheaper price compared to what it has been paying.

Although India is a big importer of pulses including chickpea, domestic prices of chickpea in the wholesale market of the biggest producing state were lower than the CIF prices at port in three out of the six years. It may appear ironical that imports of chickpea took place when domestic prices are lower than the CIF import price. One explanation for this seems to be that there is considerable intra year and inter market variation in chickpea prices in the country and imports are resorted to for keeping a check or to take advantage of peak prices in the lean months in some of the markets.

The impact of trade liberalization on selected commodities was studied in two ways; one, assuming unilateral free trade by the country in which there is no restriction on imports and exports. This would imply that domestic prices would be equated to corresponding CIF or FOB prices during TE 1996/97, adjusted for internal marketing and transport cost. This has been termed the base scenario with liberalization. The other scenario refers to year 2000 and assumes multilateral trade liberalization, with full Uruguay impact, in which subsidies, etc. are removed as envisaged in the Uruguay round. This would entail increases in international prices by 7% in the case of rice and 4% in the case of maize and rapeseed-mustard oil.

Analysis shows that, if trade is liberalized, the domestic rice price would go up by 1.39% and the farm level price of paddy would rise by 1.45% in the base scenario. The impact is quite strong in the free trade scenario with full Uruguay impact, which envisages a 7% rise in

international prices and thus makes export more attractive. Under free trade this would result in a 9.38% increase in the rice price and a 9.81% rise in farm level price of paddy in India.

The impact of freeing exports on maize prices is very strong. In the base scenario trade liberalization involves about a 21% increase in domestic wholesale and farm level prices. Multilateral free trade with full Uruguay impact would raise the base level wholesale price by more than 25%.

Free import of rapeseed-mustard oil in the base scenario would have rendered this edible oil cheaper by 18%. Similarly, prices received by farmers for rapeseed-mustard seed would go down by about 16%. In the second scenario, in which the international price increases by 4%, the domestic price of the edible oil falls by 14.75% and the farm level price of seed declines by 13%.

The study demonstrates that free trade in rice would lead to a small net social loss to the country as the gain in producer surplus due to the higher price fetched by exports is lower than the corresponding loss in consumer surplus. In the case of maize, liberalization of trade is found to be highly beneficial to the country. The gain to producers is almost double the loss to consumers due to the price rise. In the case of rapeseed-mustard, when the domestic price of its oil is equated to the relevant import price and the required change is incorporated in the seed price, net social welfare improves.

The study shows that implementation of WTO would have a mixed impact on net social welfare of India. The country would be a net gainer in some commodities and it would be a net loser in some other commodities.

In the selected crops, free trade is estimated to have a sharp positive impact on net return from production of exportables like maize and rice, whereas it is going to have a small negative impact on net return from the importables like rapeseed-mustard. In rice, where the level of input subsidy is high, free trade would not be sufficient to counter the adverse impact on income due to withdrawal of subsidies.

The economic reforms initiated in India during 1991 have focussed mostly on non-agricultural sectors and the approach towards the agricultural sector has remained gradual and cautious. During the last 4-5 years trade in agricultural commodities has been somewhat liberalized with relaxation or removal of control and restrictions on import of some commodities and on export of most of the commodities. Though perceptions about the nature of reforms and their impact differ considerably, there is growing realization about the desirability of some kind of both external and domestic reforms to meet emerging challenges and opportunities within the country and outside.

According to one point of view complete liberalization of trade would improve resource use efficiency by shift in area from less competitive crops to more competitive crops. It is pleaded that, in the case of India, it would be beneficial to go for export of superior foodgrains like rice and wheat and allow freer import of edible oils. As comparative efficiency in oilseed production is very low, the policy of attaining self-sufficiency in edible soilseeds is questioned. On the other hand, the policy of total liberalization and reliance on trade to meet domestic demand and to reap major gains is believed to pose many dangers and risks for a large country like India. It is contended that the possibility of inter crop substitution with a view to step up exportable crops may not be as bright as it appears at first sight. However India being a member of WTO has to liberalize trade in agriculture and would be facing a world where other countries would also be moving towards liberalization.

In our opinion, signals from the ratio of domestic to global prices should not be stretched too far. There should not be major policy shifts for important crops like foodgrains and oilseeds based on global price signals. Agriculture should be subjected to world competition, but domestic policy support must continue. The policy of attaining self-sufficiency in oilseeds

should also emphasize improvement in resource use efficiency through technological improvements.

The challenges due to import liberalization cannot be met through trade policy changes alone, nor can trade policy in itself help in taking advantage of export in a liberalized world. Both these would depend on the growth rate in domestic output and production efficiency built into the cost of production. If domestic output does not grow to keep pace with domestic demand then domestic prices would go up, which would be attractive for imports and unfavourable for exports. Similarly, if cost of production in the domestic market is sufficiently higher than in competing countries, this would attract imports and discourage exports. The best strategy to face the challenge of import liberalization and to take advantage of export potential would be to ensure: (i) growth in aggregate domestic supply higher than 2.75%, which is estimated to be the growth rate in domestic demand and (ii) continuous improvement in efficiency of production to keep the cost of production low. These would require concerted and simultaneous efforts on several fronts, such as: (i) increase in the use of modern inputs like fertilizers and plant protection chemicals; (ii) promotion of use of improved seeds; (iii) improvement in production technologies; (iv) full exploitation and efficient use of irrigation resources; (v) improvement in existing and creation of modern infrastructure for agricultural growth and development and (vi) agricultural diversification at the macro level by promoting area specific specialization at the micro level.

There are signals that the agricultural sector has started responding to economic reforms initiated in the country. The crop pattern is getting diversified with a shift away from foodgrain crops towards high value, in some cases export oriented, crops. This has implications for food security in the country. The growth rate in foodgrain output during the1990s has declined to around 2.0%, which is the lowest ever realised in the post Independence period. This development is depressing when viewed in the light of existing nutritional intake and future demand for foodgrains.

Initially there was a lot of opposition to the economic reforms initiated during 1991 and also to trade liberalization in response to the GATT accord. However, the accelerated growth rate of the economy during the reform period, the comfortable BOP position, a decline in the rate of inflation and smooth economic transition in adjusting to liberalization and globalization have won some admiration and support for these policies in the country.

Following the stringent measures undertaken under the reform process the country has been able to accumulate relatively large foreign exchange reserves and maintain the balance of payments for some time. This is being used as a plea by the U.S.A. and the western world to stop India from seeking concessions from the WTO to maintain QRs on selected items for some more years. This is a setback to the reform process as the country could dilute this gain easily by using foreign exchange reserves for infrastructure development, which is starving for funds. Moreover, the easy position of foreign exchange reserves for a short time should not be treated as a permanent feature. Another irritant to the liberalization process is the ban on Indian exports by some Western countries on the grounds of sanitary and phyto-sanitary conditions, environment safety, use of child labour in production, etc.

The impact of globalization of agriculture on natural resources, long term productivity, crop pattern and nutritional intake of vulnerable sections of the society is another important issue. Liberalization should result in growth with a human face. There are also demands for a level playing field in agricultural support, as some developed countries are providing high levels of input subsidies and export subsides to their farmers, which puts them in an advantageous position compared to their counterparts in countries like India.

Effects of Trade Liberalization on Selected Food Crops in Indonesia

Erwidodo and Prajogo Utomo Hadi[*]

Introduction

The completion of the Uruguay Round (UR) negotiation and the establishment of the World Trade Organization (WTO) in January 1995 accelerated liberalization initiatives in all trading nations. The main elements of the UR agreement include commitments on enhancing market access, dismantling of quantitative restrictions and subsidies as well as non-tariff barriers by all members. In line with the UR commitment, there have been growing regional trade liberalization initiatives. In the Asia and Pacific Economic Cooperation (APEC) forum, members have committed to undertake further trade liberalization in the region. Similarly, there have been strong needs among ASEAN members to accelerate realization of the ASEAN Free Trade Area (AFTA).

Concern about the effects of trade liberalization on agricultural production has been growing. Despite the above commitments that are in place, debates on the potential effects of trade liberalization continue. Protests against governments have been accelerating, not only in developing countries but even much more intensely in the developed countries. Moreover, the economic crisis which hit a number of countries and regions has stimulated growing sentiment against trade liberalization initiatives. Many opponents believe that the main beneficiaries of a liberalized global market are developed nations, and hence they argue that market liberalization in the developing nations should be undertaken more carefully, in a gradual rather than an abrupt manner. Interestingly, the economic crisis has induced Indonesia to embark on a more liberalized market economy. The crisis induced reforms and their potential effects remain debatable issues up until today.

In order to smoothly proceed with the adjustment process towards a more liberalized market economy, the effects of trade liberalization and especially those on agriculture in developing countries like Indonesia need to be analyzed. As reflected in its title, the project: Effects of Trade Liberalization on Agriculture in Selected Asian Countries with Special Focus on CGPRT Crops (TradeLib) is aimed at assessing the effect of trade liberalization in selected Asian countries on the production, marketing and trade of selected food commodities both at the aggregate and at the farm level

Selection of commodities

Rice, maize, soybean, cassava and potatoes are the selected commodities in this study. Rice, in particular, is the staple food of the Indonesian people. Rice contributes more than 65% of total calorie consumption, and around 50% of total protein intake. This commodity is not only considered economically and socially important, but is also considered a politically sensitive commodity. Rice plays a key role as a "wage" good, since it is widely used in wage

[*] Center for Social Economic Research on Forestry and Estate Crops, Bogor, Indonesia.

Comments on the Indonesian Country Report

Kaman Nainggolan[*]

Erwidodo and and Prajogo U. Hadi have reported detailed research on the impacts of trade liberalization on rice, soybeans, maize, cassava, and potatoes in Indonesia. Their findings should be considered cautiously when it comes to policy setting, since food policy has a broad implication in terms of food security.

Main findings

Erwidodo and Hadi found that trade liberalization through tariff reductions for import substitution reduces wholesale price, producer price, supply quantity and producer surplus, but increases demand quantity, import and consumer surplus. The total effect is improvement in social welfare. More specifically they calculated that for rice the net welfare is around Rp 1,832.2 billion at a 16.4% tariff cut. But net revenue of farmers decreases from Rp 892,119 to 698,373 (decline by 21.7%), and imports increase by 1.7 million tons. They found similar results with respect to soybeans and maize.

For export commodities covered in their study, trade liberalization will increase welfare of the society. They suggest that to minimize adverse impacts of trade liberalization (for import substitution commodities) agricultural reform should be directed to increase farm productivity and marketing efficiency.

General comments

Any research on food issues in food deficit developing countries is always interesting and relevant because food security is sensitive to trade policy. Food security implies that there is adequate availability, stability, and access to essential foods. Adequacy is important to meet the consumption needs. Stability implies that food consumption will not fall below consumption requirements, and access relates to purchasing power.

Prior to 1998 the government maintained administrative controls on food supply and provided a fertilizer subsidy to farmers. The collapse of the rupiah against foreign currencies makes domestic food prices well below world market prices. This situation was exaggerated by a sharp decline in domestic food production due to severe drought and low real income resulting in a decline in food consumption. The result is food insecurity and the fall of the Suharto regime.

We should bear in mind that prior to 1998 the import tariff for rice, soybean and corn was reduced to 0, but BULOG as a State Trading Enterprise (STE) had a monopoly right for rice and soybean procurement.

In the last quarter of 1998 the government liberalized food trade by limiting BULOG's mandate to rice operations, removing fertilizer subsidies and market restrictions (effectively by December 2 1998), increasing subsidized farmers' working capital, and increasing the floor

[*] Center for Market and Information Development, Agribusiness Agency, Ministry of Agriculture, Indonesia.

price for dry husk paddy effectively by January 1999 (Presidential Instruction No. 32, 1998). Later in 1998 the government decided that BULOG was no more a sole importer of rice, and the open market era for rice began.

The situation today is quite different. With the rupiah starting to strengthen and a more favorable climate supported by a government program to increase food production known by 'GEMA PALAGUNG 2001' there is an indication of increasing food production. With market liberalization, the domestic price is now higher that that of imports and BULOG tends to import rice rather than buy from farmers. There is a strong indication that the prices received by farmers cannot compensate for increasing cost of agro-inputs. This is the case why we should be very careful when we set up the food policy based on the above article.

Specific comments

The study reported by Erwidodo and Hadi was purely based on welfare analysis, which in my view fails to capture the social impacts of food trade liberalization. The result of welfare analysis is always predictable; it is merely income transfer from one group to others. Trade liberalization would have larger negative impacts than estimated by Erwidodo and Hadi. When food prices fall then there is no incentive for farmers to produce more food, and this will further create other negative impacts such as unemployment. The collapse of the sugar industry in Indonesia should provide an excellent example for this.

Indonesia's commitments in the Uruguay Round i.e., tarification in the case of rice allow Indonesia to impose import tariff at 90% for imports up to 70,000 tons rice, and 180% for rice imports above 70,000 tons. For soybean the binding rate was set at 27%. In fact Indonesia's commitments in the Uruguay Round in the agriculture sector did not involve major structural adjustments, since bound rates were set significantly above the applied rate (40% on average). The commitments for tarification were mainly concerned with local content requirements applying to the dairy sector and to soybean cakes for feed. To its credit, Indonesia removed local content requirements well ahead of schedule.

It is interesting: should the study start with the bound rate then conduct a series of simulations reducing the bound rates gradually to complete tariffication over a 10 year period for rice and soybean, or should it start with 0% tariff and then increase gradually to evaluate the welfare impacts?

For rice policy, Indonesia is now confronted with a difficult situation. On one side market liberalization is seen as a threat to food security at least from the availability and stability standpoint. On the other side the government is committed to set a floor price based on three geographical zones, ranging from Rp 2,310/kg to Rp 2,740/kg rice equivalent. How can we achieve dual objectives (market liberalization and price protection) without trade instruments?

To clarify the situation, Table 1 provides a comparison between the border price of rice imports and the domestic price.

Table 1 Comparison between rice import price and domestic price.

Month/Year	Bangkok Price[1] (US/ton)	Freight (US/ton)	C&F Price[2] (US/ton)	Ex. Rate (Rp/US)	C&F Price (Rp/kg)	Border Price[3] (Rp/kg)	Domestic Wholesale Price (Rp/kg)
Jan 1998	250.00	15.00	265.00	10,375	2,749	2,887	1,350
Feb 1998	243.00	15.00	258.00	8,750	2,258	2,370	1,300
Mar 1998	246.00	15.00	261.00	8,325	2,173	2,281	1,200
Apr 1998	253.00	15.00	268.00	7,970	2,136	2,243	1,200
May 1998	265.00	15.00	280.00	10,525	2,947	3,094	1,350
Jun 1998	266.00	15.00	281.00	14,990	4,212	4,423	1,850
Jul 1998	270.00	15.00	285.00	13,000	3,705	3,890	1,900
Agt 1998	265.00	15.00	280.00	12,700	3,556	3,734	3,200
Sep 1998	265.00	15.00	280.00	10,700	2,996	3,146	2,725
Oct 1998	275.00	15.00	290.00	7,550	2,190	2,299	2,525
Nov 1998	257.00	15.00	272.00	8,200	2,230	2,342	2,527
Dec 1998	255.00	15.00	270.00	7,579	2,046	2,149	2,772
Jan 1999	250.00	15.00	265.00	8,493	2,251	2,363	2,930
Feb 1999	233.00	15.00	248.00	8,751	2,170	2,279	2,845
Mar 1999	228.00	15.00	243.00	8,944	2,173	2,282	2,715
Apr 1999	205.67	15.00	220.67	8,650	1,909	2,004	2,385
May 1999	207.00	15.00	222.00	8,002	1,776	1,865	2,408
Jun 1999	224.00	15.00	239.00	7,383	1,765	1,853	2,397
Jul 1999	226.00	15.00	241.00	8,760	2,111	2,217	2,397
Agt 1999	220.25	15.00	235.25	7,425	1,747	1,834	2,300

Notes: [1] FOB Bangkok price for 25% broken rice.
[2] FOB + freight.
[3] C&F price in rupiah/kg adding 5% for handling and transportation costs.
[4] Wholesale price for IR III in Cipinang Jakarta.

Table 1 clearly shows that beginning October 1998, the border price of rice was much cheaper than the domestic wholesale price. This is a result of two factors: i) the rupiah starting to appreciate, and ii) international price tending to decline due to relatively easy supply and demand situation. If the domestic political situation is under control, next year the rupiah will probably get stronger, leading to a further decline of border price. With 0% import tariff and market liberalization, farm real income will worsen. So we cannot make any justification on the basis of macroeconomics alone. Food policy should be revised to provide incentive for farmers to ensure food security. There are only two ways to escape from this problem. One alternative is to provide more subsidies in agro-inputs (fertilizer, working capital, and pesticides). This option is still permitted during the implementation period of GATT. Developed countries today still apply high subsidies for their farmers. For example EU spent around US$ 600 billion. Indonesia's fertilizer subsidy in the past never exceeded Rp 1 trillion per year. Another option is to impose an import tariff for rice to compensate for the monopoly right of BULOG and to ensure farm income equivalent to the minimum wage level (INPRESS 32, 1998).

If the second option is selected, then the applied import tariff is around 25.13 to 43.96%, given the import rice price between US$ 200 to US$ 220 per MT, and an exchange rate around Rp 7,600-Rp 8,000/US$. Table 2 shows calculation of various import tariff alternatives for rice.

Imposing an import tariff on rice import is much preferable to induce a price incentive for farmers and achieve food security at least in the short and medium run. Indonesia as a developing country is allowed to impose domestic agricultural support in terms of AMS up to 10% of total value of production (de aminimis rule).

Table 2 Alternative tariff rates of rice for various import prices and exchange rate to achieve rice price at Rp 2,470/kg.

Ex. Rate Tariff	7,600 Price	Ex. Rate Tariff	7,700 Price	Ex. Rate Tariff	7,800 Price	Ex. Rate Tariff	7,900 Price	Ex. Rate Tariff	8,000 Price
43.96	200	42.09	200	40.27	200	38.50	200	36.77	200
37.57	210	35.78	210	34.04	210	32.34	210	30.69	210
31.71	220	30.00	220	28.34	220	26.71	220	25.13	220
26.34	230	24.70	230	23.10	230	21.54	230	20.02	230
21.38	240	19.81	240	18.27	240	16.77	240	15.31	240
16.80	250	15.28	250	13.81	250	12.37	250	10.96	250
12.55	260	11.09	260	9.67	260	8.28	260	6.93	260
8.60	270	7.19	270	5.82	270	4.48	270	3.17	270
4.92	280	3.56	280	2.23	280	0.94	280	(0.32)	280
1.48	290	0.17	290	(1.12)	290	(2.37)	290	(3.59)	290

Note: Price is FOB US$/MT.

I realize that consumers' surplus is reduced compared with a free market with no tariff. My argument is more related to justice. The past policy was biased against farmers. And rice, whereby about 20 million families depend on rice as a source of their income, is too important to be left to the free market. Rice is a highly sensitive commodity.

I fully support the writer's view that agricultural reform should be directed to increase productivity and marketing efficiency. But it is difficult to find the source of productivity. Our paddy productivity is among the best in Southeast Asia. Perhaps Indonesia should invest more in rural irrigation and other infrasrucure. But this is more in the long run perspective. There is always a time lag of investment impacts.

Maize is not as sensitive as rice. Around 30% of maize production is used as a feed for the poultry sub-sector. If the current production trend continues (last year production reached 10.17 million tons), Indonesia will achieve self-sufficiency in maize and most likely will be a net exporter. I do not foresee any harm if the maize market is fully liberalized (existing condition). Higher maize production would help the poultry sub-sector to develop.

In the case of soybean, Indonesia is in a difficult position to achieve self-sufficiency. Our productivity is low by international standards (1.1 tons/hectare). Productivity must be increased to 2 tons per hectare to meet the domestic demand. Demand for soybean is strong for processed soybean, known as tempe, a traditional food in Indonesia, and soycake used for feed. Indonesia should rely on imports to meet the growing domestic demand. Imposing a high tariff would only worsen the low level income group. A maximum tariff of 10% would probably be enough to provide incentive to the local producers.

For potatoes and other export-oriented commodities, a more open market would benefit Indonesia.

Suggestions

Indonesia's agricultural reforms should be implemented in line with the WTO commitments to ensure the success of the overall package of reforms. The food security issue is so important for developing countries like Indonesia that strategies should be directed to rebuild food security. Efforts must be redoubled to increase food output.

To help increase production of rice, future research should examine the possibilities of applying subsidies or import tariffs of rice. Since rice is a sensitive commodity, it should not be left to the free market approach. At least in the short run, incentives must be provided to food

producers. Imposing an import tariff barrier at least in the short and medium run should be explored to insure the effectiveness of INPRESS 32, 1998.

It is time for the government to conduct a broad review of the existing trade for agricultural products, especially for foodstuffs. The letter of Intent between the IMF and Indonesia imposed a maximum tariff of 5% for food commodities. For rice, maize, and soybean import tariffs were set at 0%. Border protection should be imposed to ensure the market of domestic products allowed by the WTO.

determination, and its price therefore has a significant inflationary power in the economy. Maize is the second food of the Indonesian diet. For human consumption, maize is usually mixed with rice. It is also an important feed component of which demand is continuously increasing as a result of rapid development of feed industries in the past two decades associated with the rapid development of the poultry industry. Indonesia used to be a net exporter of maize, but has turned into a significant net importer since 1995.

As processed food, soybean is an important protein source in the Indonesian diet. The attention given to soybean has been stimulated primarily by rapidly rising demand for soybean, and in turn its import, as a result of rapid expansion on food and feed industry in Indonesia. Cassava is considered an important food crop, not only as a staple, but also as raw material for feed and food industries, and a source of foreign exchange earning. Unfortunately, cassava is frequently associated with poverty, as it is usually consumed as a staple by the poor. This puts cassava as an inferior commodity, which in turn slows down cassava production development in Indonesia.

Potato in Indonesia is considered a horticultural crop. It is traditionally used as an additional vegetable in soups and has lately developed rapidly to include chips and french fries. Potato ranks sixth among the major vegetable commodities. Demand for potato in Indonesia increased substantially in the last decade, due to rapidly growing fast food and food industries. The increase in consumption is particularly rapid, coming from high income classes in urban areas.

Selection of location

In order to better analyze the effects of trade liberalization at regional as well as farm levels, a representative location for each commodity in question was selected, based on the following criteria: (i) it is considered as a center of production of the respective commodity, (ii) it is also major consuming region, (iii) it is strongly affected by trade liberalization, and (iv) it is accessible and not costly to reach.

Based on these criteria, Java was selected. West Java was selected to represent rice and potato producing regions. The locations of quick surveys were Karawang, Sukamandi and Cianjur for rice, and Pangalengan for potato. East Java was selected for maize, cassava, and soybean. The survey areas were Bojonegoro and Pacitan. Even though not formally selected, quick surveys were also undertaken in Central Java.

Selection of methodology

To examine the aggregate effects of trade liberalization, both qualitative and quantitative analyses are used. The qualitative analysis is undertaken using time series data by observing and calculating trends of the development of area, production, yield, import, export, and domestic consumption of the commodities in question. Effects on trade and marketing are analyzed using some indicators such as prices, marketing margin, and related indicators for export and import.

The effects of trade liberalization are also quantitatively examined using the concept of static partial welfare analysis. This partial welfare analysis is based on the supply-demand analysis of the respective commodity in which the impact of any policy change on producer, consumer and government surpluses is calculated. Some data and parameters are needed, namely: tariff rates, price elasticity of demand, price elasticity of supply, price transmission elasticity, and the base level of price, import quantity, and production quantity. In the analysis, wholesale price is used to avoid the difficulty of estimating stocks. In other words, it is assumed

that total demand is simply a summation of quantity produced and quantity imported, or the difference between quantity produced and quantity exported. Price elasticity of demand and supply for each commodity as well as tariff and price transmission elasticity are estimated using statistical data.

Trade liberalization scenarios used in the analysis are those included in the previous (before economic crisis) deregulation package undertaken by the government. This is to say that the analysis was basically a type of ex-post evaluation. To make the results more interesting and useful, some efforts are also undertaken to analyze current policy issues. The crisis-induced reforms in agriculture, particularly liberalizing the domestic rice market, have been controversial policy issues. Removal of the BULOG monopoly and fertilizer subsidy as well as the government initiative to implement an import tariff on rice are other important policy issues.

Farm level effects of trade liberalization are analyzed using a partial budgeting approach. Trade liberalization would change domestic market prices, including the price received by farmers. With this partial budgeting approach, the change in farm-gate price resulting from trade liberalization is simply imputed into the farm budget to calculate a new farm profitability. Two effects can be considered in the analyses, namely the immediate effect, and the longer-term effect. The first effect is an immediate effect on gross farm income due to any change in the commodity price. This change in output price will not alter the production cost. This is true if the crop is ready to harvest when the change in output price occurs. The second effect would be the appropriate measure to use if the change in output price is assumed to occur at the beginning of the planting season. The production cost will be expected to change as the farmer may reduce or use more inputs in response to output price change. This cross-price effect can be measured if we know the cross-price elasticity of output and inputs.

Results and discussion by commodity

At the macro level, tariff reductions for import substitution would reduce wholesale price, producer price, supply quantity and producer surplus, but increase demand quantity, import and consumer surplus. The eventual effect would be an increase in net surplus, suggesting an improvement in social welfare. The extent of change, however, would be dependent very much on the transmission elasticity of tariff changes on wholesale price, the transmission elasticity of wholesale price on producer price, the price elasticity of supply and demand for the respective commodity. Higher tariff transmission elasticity would have a larger negative effect on wholesale and producer prices, and thus have a larger negative effect on producer surplus, a larger positive effect on consumer surplus and eventually a larger positive effect on social welfare.

The effect of multilateral (Uruguay Round) trade liberalization resulting from the partial welfare analysis in this study should be interpreted cautiously, since the result ignores the general equilibrium effect of resource movement between sectors, which creates other economic opportunities and dampens the overall adverse effects. Previous studies indicate that commodity prices will be higher than they would have been without liberalization. This will simply mean that countries that are net exporters of these commodities will gain from liberalization, while countries that are net importers may lose. In this regard, in order to avoid the possible loss from trade liberalization due to these upward price changes, developing countries should reform their own policies and also act to redistribute income domestically between consumers and producers.

At the farm level, tariff cuts would reduce the producer price. Due to own-price and cross-price effects, a decline in producer price would reduce the use of inputs such as fertilizer and labor, which would subsequently reduce yield and net revenue. As reflected in price

transmission elasticity, the magnitude of the effects at the farm level would be dependent on the marketing system of the respective commodities. It is likely that the more efficient the marketing system, the higher the elasticity of price transmission. In the case of rice and potato in West Java and soybean, maize and cassava in East Java, the marketing systems can be considered efficient with marketing margins of 14-15%.

Rice

No single policy can be claimed as the main contributor for Indonesia's success in achieving and maintaining rice self-sufficiency. The success is instead attributed to combined efforts and policies over decades. The main policies which have contributed to the rapid growth in rice production and achievement of self-sufficiency are the rice intensification programs, irrigation development, support for development and dissemination of modern varieties of rice, intervention in rice marketing and price support, and fertilizer subsidies.

Import figures indicate that Indonesia has gradually liberalized its rice trade since the late 1980s. Milled rice import quantity, although unstable, tended to increase. In 1996, the rice import was 2.04 million tons valued at US$ 676.6 million. This was a combined result of increased domestic shortage of rice, due primarily to increased demand and domestic supply shock resulting from the drought. In subsequent years (1997-1998), higher import quantities might be expected as a result of severe drought effects that could, in turn, drive up world rice prices. The total rice import was estimated to increase further in 1998 to around 4.2 million tons valued at US$ 1.08 billion. The major countries of origin of rice imports have been India, Thailand, Viet Nam and Pakistan.

Indonesia's rice market has been heavily protected, mainly using non-tariff barriers. The import restrictions have been somewhat reduced since 1989, when the government declared its concept of rice self-sufficiency on trend for the first time. As shown in Table 1, the removal of the implicit import tariff on rice (16.4%), as the first scenario, would increase the demand for rice by 2.36% or 796,700 tons. Meanwhile, the supply of paddy would decline by 2.83%, from 51.1 million tons to 49.7 million tons in response to the drop in producer price of paddy. Import quantity would increase by around 1.7 million tons, from 2.04 to 3.7 million tons. As a result, the net welfare gains for the 16.4% cut of implicit tariff would be around Rp 1,832.2 billion. The gain of consumer surplus was Rp 4,910.5 billion, while the loss of producer surplus was estimated around Rp 2,092.6 billion. At the farm level, the gross revenue and total variable cost of rice farming would decrease by 13.9% and by 5.7%, respectively, resulting in a reduction of net revenue of 21.7% from Rp 892,119 to Rp 698,373.

The implementation of Uruguay Round trade liberalization, as the second scenario, is expected to lift up the world market of rice by 7% (FAO 1995). The analysis shows that this price change would increase the wholesale and producer prices by 6.63% and 6.76%, respectively (Table 2). The increase in the domestic wholesale price would reduce the demand for rice by 1.27% (427,650 tons), but increase production of paddy slightly by 1.52% (30,940 ton), from 51.102 million tons to 51.133 million tons. Import quantity would decline by around 446,840 tons, from 2.040 to 1.593 million tons. The net welfare would be around Rp 1,069.30 billion. These social welfare losses were attributed to losses on consumer surplus, which were much higher (Rp 2,209.07 billion) than the gains captured by producers (Rp 1,139.77 billion). At the farm level, Uruguay Round trade liberalization would increase gross farm revenue and total variable cost by 7.4% and 3.0%. Eventually, the net revenue would increase by 11.7%, from Rp 892,119 to Rp 996,063.

Table 1 Social welfare effects of 16.5% reduction of implicit tariff.

Item	Value		
World price 1996 (US$/ton)	332		
Import parity price at wholesale (Rp/kg)	854		
Wholesale price at to (Rp/kg)	995		
Initial implicit tariff rate (%)	16.46		
New implicit tariff rate (%)	0		
Tariff change (%)	-16.46		
Producer price at to (Rp/kg)	330		
Supply of paddy at to ('000 t)	51,102		
Conversion of paddy to rice	0.62		
Import quantity at to ('000 t)	2,040		
Demand for rice at to ('000 t)	33,723		
Demand elasticity	-0.1914		
Supply elasticity	0.2245		
Price transmission elasticity of PWS to PF	1.0198		
Effects of implicit tariff change:			
Tariff transmission elasticity	0.5	0.75	1
Effect on wholesale price (%)	-8.23	-12.34	-16.46
Change in wholesale price (Rp/kg)	-81.87	-122.81	-163.75
Wholesale price at t1 (Rp/kg)	913.13	872.19	831.25
Effect on producer price (%)	-8.39	-12.59	-16.78
Change in producer price (Rp/kg)	-27.69	-41.54	-55.38
Producer price at t1 (Rp/kg)	302.31	288.46	274.62
Effect on demand (%)	1.57	2.36	3.15
Change in demand quantity ('000 t)	531.12	796.68	1,062.24
Demand quantity at t1 ('000 t)	34,254.36	34,519.92	34,785.48
Effect on supply (%)	-1.88	-2.83	-3.77
Change in supply quantity ('000 t)	-962.70	-1,444.04	-1,925.39
Supply of paddy at t1 ('000 t)	50,139.30	49,657.96	49,176.61
Supply of rice at t1 ('000 t)	31,086.37	30,787.93	30,489.50
Import quantity at t1 ('000 t)	3,167.99	3,731.98	4,295.98
Effect on import quantity ('000 t)	1,127.99	1,691.98	2,255.98
Effect on consumer surplus (Rp million)	2,782,778.7	4,190,474.7	5,609,041.8
Effect on producer surplus (Rp million)	-1,401,769.0	-2,092,656.5	-2,776,879.4
Effect on imp. govt. revenue (Rp million)	-265,591.3	-265,591.3	-265,591.3
Effect on net surplus (Rp million)	1,115,418.4	1,832,226.9	2,566,571.2

Source: Calculated.

The economic crisis has forced the government to abruptly deregulate its domestic rice market. The December 1998 deregulation liberalized the rice market including removal of the BULOG monopoly on importation of rice. There has been growing concern recently about the potential adverse effects of this situation. These concerns were mainly triggered by a decreasing trend of rice prices in the world market in the last four months. Some are afraid that, if no tariffs were imposed, the Indonesian rice market would be flooded by imported rice, which in turn will negatively affect domestic rice production and farm income. In order to reduce these potential adverse effects, the government has been considering implementation of an import tariff on rice (10-30%). The analysis found that that the net welfare loss for imposing a 15% import tariff (the third scenario) is estimated around Rp 588.3 billion per year (Table 3). These social welfare losses were attributed to losses on consumer surplus, which were much higher than the gains captured by producer as a result of 15% tariffs. The loss of consumer surplus is Rp 8,826 billion,

while the producer and government surplus gains were estimated around Rp 7,221 billion and Rp 1,017 billion per annum, respectively.

Table 2 Social welfare effects of world price increase (7%) on rice.

Item	Value
World price 1996 (US$/ton)	332
Increase world price (%)	7.0
Wholesale price at to (1996) (Rp/kg)	995
Producer price at to (Rp/kg)	330
Supply quantity at 1996 ('000 t)	51,102
Conversion factor of paddy to rice	0.62
Import quantity at 1996 ('000 t)	2,040
Demand quantity at to ('000 t)	33,723
Demand elasticity	-0.1914
Supply elasticity	0.2245
Price transmission of PFOB to PWS	0.9465
Price transmission elasticity of PWS to PF	1.0198
Effects of increased world price:	
Change in wholesale price (%)	6.63
Wholesale price at 1997 (Rp/kg)	1,060.92
Effect on producer price (%)	6.76
Producer price at 1997 (Rp/kg)	352.30
Effect on demand quantity (%)	-1.27
Change in demand quantity ('000 t)	-427.65
Demand quantity at 1997 ('000 t)	33,295.59
Effect on supply (%)	1.52
Change in supply quantity ('000 t)	30.94
Supply of paddy at 1997 ('000 t)	51,132.94
Supply of rice at 1997 ('000 t)	31,702.43
Import quantity at 1997 ('000 t)	1,593.16
Effect on import quantity ('000 t)	-446.84
Effect on consumer surplus (Rp million)	-2,209,065.41
Effect on producer surplus (Rp million)	1,139,769.35
Effect on net surplus (Rp million)	-1,069,296.06

Source: Calculated.

Table 3 Social welfare effects of imposing import tariff for rice (15%).

Item	Value		
Initial tariff rate (%)	0		
New tariff rate (%)	15		
Wholesale price at to (Rp/kg)	2,400		
Producer price at to (Rp/kg)	1,450		
Supply quantity at to ('000 t)	46,400		
Conversion paddy to rice	0.62		
Import quantity at to ('000 t)	4,200		
Demand quantity at to ('000 t)	32,968		
Demand elasticity	-0.1914		
Supply elasticity	0.2245		
Price transmission elasticity of PWS to PF	1.0198		
Effects of tariff change:			
Tariff transmission elasticity	0.50	0.75	1.00
Effect on wholesale price (%)	7.50	11.25	15.00
Change in wholesale price (Rp/kg)	180.00	270.00	360.00
Wholesale price at t1 (Rp/kg)	2,580.00	2,670.00	2,760.00
Effect on producer price (%)	7.65	11.47	15.30
Change in producer price (Rp/kg)	110.90	166.35	221.81
Producer price at t1 (Rp/kg)	1,560.90	1,616.35	1,671.81
Effect on demand (%)	-1.44	-2.15	-2.87
Change in demand quantity ('000 t)	-473.26	-709.88	-946.51
Demand quantity at t1 ('000 t)	32,494.74	32,258.12	32,021.49
	0.00	0.00	0.00
Effect on supply (%)	1.72	2.58	3.43
Change in supply quantity ('000 t)	796.73	1,195.09	1,593.46
Supply quantity at t1 ('000 t)	47,196.73	47,595.09	47,993.46
Supply of rice at t1 ('000 t)	29,261.97	29,508.96	29,755.94
Import quantity at t1 ('000 t)	3,232.77	2,749.16	2,265.54
Effect on import quantity ('000 t)	-967.23	-1,450.84	-1,934.46
Effect on consumer surplus (Rp million)	-5,891,646.99	-8,805,525.73	-11,698,107.97
Effect on producer surplus (Rp million)	5,190,090.71	7,818,271.01	10,468,541.26
Effect on government revenue (Rp million)	1,032,143.41	877,737.62	723,331.82
Effect on net surplus (Rp million)	330,587.13	-109,517.11	-506,234.89

Source: Calculated.

Soybean

Despite heavy restriction on imports, the import volume of soybean and soybean meal is continuously increasing. This is because the increases in domestic production could not meet the accelerating demands for soybean and soybean meals as a result of, particularly, the fast growing feed and livestock industries. During the last two decades, import of soybean grains (yellow and black) increased substantially from around 130 thousand tons in 1978 to 746 thousand tons in 1996. Meanwhile, import of soybean meal as a protein source for poultry feed increased from 283 thousand tons in 1986 to 460 thousand tons in 1994.

The decrease in the domestic wholesale price following the tariff removal (first scenario) would increase the demand for soybean by 35,500 tons or 1.61% higher than the base year level. In contrast, the supply of soybean would decline by 1.6% (32,300 tons) from 1,680 thousand tons to 1,648 thousand tons in response to the drop in producer price of soybeans. Import quantity would increase by around 67,800 tons, from 533,600 tons to 601,400 tons. The net welfare gains resulting from tariff removal on soybean import are estimated around Rp 32.3

billion. These social welfare gains were attributed to the gain that would be enjoyed by consumers, which is much higher than the losses born by producers as a result of tariff removal. The consumer surplus gain would be about Rp 110.5 billion, while the loss of producer surplus is estimated around Rp 55.8 billion. Due to tariff removal, the government would give up income of around Rp 22.3 billion per year. At the farm level, removal of the tariff would reduce net revenue of soybean farming by 4.6% from Rp 872,629 to Rp 832,354.

Table 4 Social welfare effects of a 4% world price increase on soybeans.

Item	Value
World price 1996 (US$/ton)	350
Increase world price (%)	7.0
Wholesale price at to (1996) (Rp/kg)	1,320
Producer price at to (Rp/kg)	1,020
Supply quantity at 1996 ('000 t)	1,680
Import quantity at 1996 ('000 t)	533.6
Demand quantity at to ('000 t)	2,214
Demand elasticity	-0.4282
Supply elasticity	0.5843
Price transmission of PFOB to PWS	0.7152
Price transmission elasticity of PWS to PF	0.8774
Effects of increased world price:	
Change in wholesale price (%)	5.01
Wholesale price at 1997 (Rp/kg)	1,386.08
Effect on producer price (%)	4.39
Producer price at 1997 (Rp/kg)	1,064.80
Effect on demand quantity (%)	-2.14
Change in demand quantity ('000 t)	-47.45
Demand quantity at 1997 ('000 t)	2,166.15
Effect on supply (%)	2.57
Change in supply quantity ('000 t)	13.70
Supply quantity at 1997 ('000 t)	1,693.70
Import quantity at 1997 ('000 t)	472.45
Effect on import quantity ('000 t)	-61.15
Effect on consumer surplus (Rp million)	-144,716.62
Effect on producer surplus (Rp million)	75,578.67
Effect on net surplus (Rp million)	-69,137.96

Source: Calculated.

The scenario of a 7% increase in world market price of soybean arising from Uruguay Round trade liberalization (second scenario) would increase the wholesale and producer prices by 5.01% and 4.39%, respectively (Table 4). Increase in the domestic wholesale price would in turn reduce the demand for soybean by 2.14% (47,450 tons). Meanwhile, the production of soybean would increase by 2.57% (13,700 tons) from 1,680 thousand tons to 1,693 thousand tons in response to the increase in the producer price of soybean. Import quantity would decline by 61,150 tons, from 533,600 tons to 472,450 tons. The net welfare loss resulting from implementation of the Uruguay Round trade liberalization would be around Rp 69.14 billion. At the farm level, gross revenue and total variable cost of soybean farming would increase by 4.6% and 0.4%. The net revenue would increase from Rp 872,629 to Rp 925,860 by 6.1%.

Maize

Indonesia used to be a net exporter of corn, but since the early 1990s it has turned to be a net importer. At the early stage of the period (1969-1971), the export quantity was sizeable ranging from 156,264 to 285,833 tons. In the following years, however, it tended to decrease with substantial fluctuation. Import of maize has taken place since 1973, the first year of the Second Five-Year Development Plan. There were large import quantities in 1994 and 1997, ranging from 0.6 to 1.1 million tons, and it is projected to increase in the future.

Table 5 Social welfare effects of 4% world price increase of maize.

Item			Value
Policy scenario:	World	Price Increase	
World price 1996 (US$/ton)	PW	Data	174.9
World price change	%PW	Data	4.00
World price 1997 (US$/ton)	PW1	Calculated	181.9
World price 1996 (Rp/kg)	PCIFo	Calculated	417.1
World price 1997 (Rp/kg)	PCIF1	Calculated	433.8
Wholesale price at to (Rp/kg)	PWSo	Data	491.0
Producer price at to (Rp/kg)	Pfo	Data	411.8
Supply quantity at to ('000 t)	Qso	Data	9,307.4
Import quantity at to ('000 t)	Qmo	Data	616.9
Demand quantity at to ('000 t)	Qdo	Calculated	9,924.3
Demand elasticity	Ed	Regression	-0.813449
Supply elasticity	Es	Regression	0.4762
Price transmission elasticity of PCIF to PWS	Ew	Regression	0.9122
Price transmission elasticity of PWS to PF	Ep	Regression	0.9567
Effects of increased world price:			
Effect on wholesale price (%)	%dPWS	%dPW x Ew	0.0365
Change in wholesale price (Rp/kg)	dPWS	%dPWS x PWSo	17.92
Wholesale price at t1 (Rp/kg)	PWS1	PWSo + dPWS	508.9
Effect on producer price (%)	%dPF	%dPWS x Ep	0.0349
Change in producer price (Rp/kg)	dPF	%dPF x Pfo	14.37
Producer price at t1 (Rp/kg)	PF1	PFo + dPF	426.2
Effect on demand (%)	%dQd	%dPWS x Ed	-0.0297
Change in demand quantity ('000 t)	dQd	%dQd x Qdo	-2.95
Demand quantity at t1 ('000 t)	Qd1	Qdo + dQd	9,921.4
Effect on supply (%)	%dQs	dPF x Es	0.0166
Change in supply quantity ('000 t)	dQs	%dQs x Qso	1.55
Supply quantity at t1 ('000 t)	Qs1	Qso + dQs	9,308.9
Import quantity at t1 ('000 t)	Qm1	Qd1 – Qs1	612.4
Effect on import quantity ('000 t)	dQm	Qm1 – Qmo	-4.49
Effect on consumer surplus (Rp million)	dCS	dPWS x (Qd1 - dQd/2)	-177,773.5
Effect on producer surplus (Rp million)	dPS	dPF x (Qs1 + dQs/2)	133,801.2
Effect on net surplus (Rp million)	dNS	dCS + dPS + dGR	-43,972.3

Source: Calculated.

In general, there has been less market and trade intervention on maize. The most prominent import policy was the imposition of tariffs, principally aimed at protecting farmers from severe effects of price drops. Since the early 1990s, Indonesia has practically liberalized its domestic market of maize.

The decrease in the domestic wholesale price following the 5% tariff removal (first scenario) would increase the demand for maize by 302,700 tons or 1.8% higher than the base year level. In contrast, the supply of maize would decline by 159,000 tons. Import quantity would increase by around 461,700 tons. The net welfare gain resulting from tariff removal on the maize import is estimated around Rp 36.3 billion. These social welfare gains are attributed to the gain that would be enjoyed by consumers, which is much higher than the loss borne by producers as a result of tariff removal. The consumer surplus gain would be about Rp 185.5 billion, while the loss of producer surplus is estimated around Rp 136.3 billion. Due to tariff removal, the government would give up income of around Rp 12.9 billion per year. At the farm level, the tariff removal would likely reduce net revenue by 4.86% or Rp 35,731 per hectare per season.

The world price increase of 4% arising from UR trade liberalization (the second scenario), on the other hand, would have negative effects on the maize economy. The quantity imported and consumer surplus would decrease by 4,490 tons and Rp 1,77.8 billion, respectively, while the producer surplus would increase by Rp 133.8 billion (Table 5). The social welfare of the society, in effect, would get worse because of a decline in net surplus by Rp 44.0 billion. At the farm level, on the other hand, farmer's income would be better-off from additional net revenue of 4.75% or Rp 34,894 per hectare per season.

Cassava

Indonesia is a net exporter of cassava and its derived products. During 1969-1997, export quantities were substantial, while imports were nil. Indonesia's export of cassava, however, has been fluctuating throughout the period with a declining trend. The declining export quantity in the 1991-1997 period may be attributed to slight declines in production and increases in domestic use, besides a heavy trade restriction (quota) imposed by importing countries. The world market of cassava and its derived products has been severely distorted. If these distortions were removed, or the world market of cassava liberalized, world prices of cassava may be expected to increase by 6%.

As shown in Table 6, a 4% increase in the world price would eventually decrease the quantity demanded by 0.04% or 7,000 tons. In contrast, a similar rate of increase in the world price would eventually increase the quantity supplied by 0.44% or 74,990 tons. These changes would generate a potential increase for export of around 81,990 tons. As a consequence, consumer surplus would be expected to decrease by Rp 109.4 billion and the producer surplus increase by Rp 110.7 billion. The net surplus would increase by approximately Rp 1.3 billion. This is to say that any increase in the world price of cassava would eventually improve the social welfare. At the farm level, the world price change would improve net revenue by 4.39% or Rp 85,666 per hectare per season.

Table 6 Social welfare effects of 6% increased world price of cassava.

Commodity:			Value
Policy scenario	World	Price Increase	
World price 1996 (US$/ton)	Pwo	Data	123.3
World market price change	%PW	Given	6.00
World price 1997 (US$/ton)	PW1	Calculated	130.7
Exchange rate 1996 (Rp/US$)	ER	Data	2,385
World price 1996 (Rp/kg)	PFOBo	Calculated	294.1
World price 1997 (Rp/kg)	PFOB1	Calculated	311.7
Wholesale price at 1996 (Rp/kg)	PWSo	Data	232.0
Producer price at to (Rp/kg)	PF0	Data	191.5
Supply quantity at 1996 ('000 t)	Qso	Data	17,002.5
Export quantity at 1996 ('000 t)	Qxo	Data	386.1
Demand quantity at to ('000 t)	Qdo	Calculated	16616.4
Demand elasticity	Ed	Regression	-0.01485
Supply elasticity	Es	Regression	0.12997
Price transmission of PFOB to PWS	Ew	Regression	0.75345
Price transmission elasticity of PWS to PF	Ep	Regression	1.19539
Effects of increased world price:			
Change in wholesale price (%)	%dPWS	%dPW x Ew	4.521
Change in wholesale price (Rp/kg)	dPWS	%dPWS x PWSo/100	10.49
Wholesale price at 1997 (Rp/kg)	PWS1	PWSo + dPWS	242.49
Effect on producer price (%)	%dPF	%dPWS x Ep	5.404
Change in producer price (Rp/kg)	dPF	%dPF x PF0/100	10.35
Producer price at 1997 (Rp/kg)	PF1	PF0 + dPF	201.85
Effect on demand quantity (%)	%dQd	%dPWS x Ed	-0.07
Change in demand quantity ('000 t)	dQd	%dQd x Qdo/100	-11.15
Demand quantity at 1997 ('000 t)	Qd1	Qdo + dQd	16,605.25
Effect on supply (%)	%dQs	dPF x Es	0.70
Change in supply quantity ('000 t)	dQs	%dQs x Qso/100	119.42
Supply quantity at 1997 ('000 t)	Qs1	Qso + dQs	17,121.92
Export quantity at 1997 ('000 t)	Qx1	Qs1 – Qd1	516.67
Effect on export quantity ('000 t)	dQx	Qx1 – Qxo	130.57
Effect on consumer surplus (Rp million)	dCS	dPWS x (Qd1 – dQd/2)	-17,4214.01
Effect on producer surplus (Rp million)	dPS	dPF x (Qs1 + dQs/2)	17,6570.29
Effect on net surplus (Rp million)	dNS	dCS + dPS + dGR	2356.28

Source: Calculated.

Potato

Production of potato in Indonesia has grown steadily during the last two decades. Total production increased from 230 thousand tons in 1980 to 1.1 million tons in 1996, at an average rate of 10.3% per annum over the period. Although long-term production and consumption indicate positive trends, fluctuation has been experienced over the last ten years. The increase in production is mainly attributable to a steady increase in yield, from 9.4 tons per ha in 1980 to 15-16 tons per ha in 1996-1997. Yield of potato has somewhat fluctuated due a number of reasons, and there has been indication that yield of potato in major highland production areas may be declining. Factors leading to reduced yields in highland areas are, among others, the use of degenerated and infested seed, occurrence of pest and disease complexes, and decreasing soil fertility.

Table 7 Social welfare effects of a 5% tariff reduction on potato, 1996.

Item	Value		
Initial tariff rate (%)	22		
New tariff rate (%)	17		
Tariff change	-5		
Wholesale price at to (Rp/kg)	868		
Producer price at to (Rp/kg)	762		
Supply quantity at to ('000 t)	1,035.26		
Import quantity at to ('000 t)	2.10		
Demand quantity at to ('000 t)	1,037.36		
Demand elasticity	-0.1142		
Supply elasticity	0.8652		
Price transmission elasticity of PWS to PF	1.0208		
Effects of tariff change:			
Tariff transmission elasticity	0.50	0.75	1.00
Effect on wholesale price (%)	-2.50	-3.75	-5.00
Wholesale price at t1 (Rp/kg)	846.30	835.45	824.60
Effect on producer price (%)	-2.55	-3.83	-5.10
Producer price at t1 (Rp/kg)	742.55	732.83	723.11
Effect on demand (%)	0.29	0.43	0.57
Change in demand quantity ('000 t)	2.96	4.44	5.92
Demand quantity at t1 ('000 t)	1,040.32	1,041.80	1,043.28
Effect on supply (%)	-2.21	-3.31	-4.42
Change in supply quantity ('000 t)	-22.86	-34.29	-45.72
Supply quantity at t1 ('000 t)	1,012.40	1,000.97	989.54
Import quantity at t1 ('000 t)	27.92	40.83	53.74
Effect on import quantity ('000 t)	25.82	38.73	51.64
Effect on consumer surplus (Rp million)	22,542.82	33,838.34	45,149.92
Effect on producer surplus (Rp million)	-19,909.64	-29,697.77	-39,374.77
Effect on government revenue (Rp million)	1,926.15	2,912.83	3,899.51
Effect on net surplus (Rp million)	4,559.34	7,053.40	9,674.66

Source: Calculated.

Indonesia is a net exporter of potatoes. During the 1980-1997 period, export of potato increased from 365 tons to 36,758 tons, at an average rate of 31% per annum. The principal country destinations of potato export are Malaysia and Singapore. Even though in a relatively small amount, import of potato is continuously increasing. Potato is imported in the form of seeds, fresh or chilled and frozen. During the 1988-1997 period, import of potato increased from 18.9 tons to 2,035 tons, or grew at on average annual rate of 68%. The principal countries of origin of imported potato are Australia, USA and the Netherlands for potato seeds, Australia and the Netherlands for fresh/chilled potato, and USA for frozen potato.

Unlike other food commodities, as indicated before, government policies on production, marketing and trade have been very limited. On the production side, as it is not considered a main staple, there have been limited production programs on potato undertaken by both national and provincial governments. Except for tariff regulation, potato trade and marketing have long been liberalized. Moreover, potato-related products, which have been tariffied, are of little importance, since they are not widely used in production and are relatively small in their import magnitude. In addition, domestically produced potatoes are not perfect substitutes of the

imported ones. Therefore, any policy for liberalizing potato trade will be expected to have limited effects not only on potato industries but also on the economy.

The decrease in the domestic wholesale price following tariff reduction (from 22 to 17%) would increase the demand for potato by 2,960 tons or 0.29% higher than the base year level (Table 7). In contrast, the supply of potato would decline by 2.2% (22,860 tons), from 1,035 thousand tons to 1,012 thousand tons in response to the drop in producer price of potato. Import quantity would increase by around 25,860 tons, from 2,100 tons to 27,920 tons. As a result, the net welfare gain from tariff removal would be around Rp 4.6 billion. This is attributable to consumer surplus gain, producer surplus loss and government revenue gain of Rp 22.5 billion, Rp 19.9 billion and Rp 1.9 billion, respectively. At the farm level, this 5% tariff reduction would reduce gross revenue and total variable cost of potato farming by 5.4% and 0.2%, respectively. The eventual result would be a decline in net revenue by 7.9%, from Rp 10,356,164 to Rp 9.533,752 per ha per season.

Economic crisis, policy reforms, and related impacts

Since the economic crisis hit the country, the government has undertaken massive policy reforms in agriculture, including: (i) eliminating the BULOG import monopoly over wheat, wheat flour, sugar, soybeans, garlic, and quite recently rice, (ii) reducing tariff rates on all food items to a maximum of 5% and abolishing local content regulations, (iii) removing restrictive trade and marketing arrangements for a number of commodities including the local content requirement, and (iv) deregulating trade in agricultural products across district and provincial boundaries including those for cloves, oranges, and livestock. It is expected that consistent implementation of these reforms will restore investor confidence and allow for more efficient and productive investment.

Despite the ongoing reforms, the economy remains in a deep crisis. The massive currency depreciation has serious implications on domestic demand, the banking system, corporate balance sheets, inflation, trade and the balance of payments, government finances, and eventually growth, income, employment, welfare, and poverty. The most immediate effect of the exchange rate depreciation was a collapse in domestic demand. The collapse of domestic demand overwhelmed producers of import substitutes who might otherwise have benefited from the exchange rate depreciation. Exporters of manufactured products have been handicapped by a shortage in trade finance due to lack of confidence among the trading partners. The main gainers were exporters, especially those exporting agricultural and natural resource-based products.

The currency depreciation has caused inflation to soar. By the end of June 1998, inflation over the previous 12 months had reached 59%. The bulk of this increase was caused by a rise in the price of tradable goods, especially food and clothing. This has serious implications on the welfare of the poor. Agricultural supply shocks due to weather problems combined with the high inflation have sharply reduced consumer purchasing power and triggered an alarming rise in the number of food insecure families. A large number of families with incomes marginally above the poverty line in 1996 have found that their incomes no longer keep pace with the rapidly rising prices of essential goods. Up to now, the government is retaining a targeted subsidy on rice, particularly to food insecure families, and it is still seeking the most appropriate mechanism to deregulate trading in the staple rice, and to make the price affordable. Market operations to help people severely affected by the crisis have been conducted in 23 out of the country's 27 provinces.

Weather problems and the economic crisis have pushed Indonesia into a serious food crisis. In terms of rice, the supply shocks occurred after several years of slow growth of rice

production. The monetary crisis, which has disrupted agricultural input and output markets, seriously affected food supply. Rice production, in the form of dried paddy, dropped from 51 million tons in 1996 to 49 million tons in 1997 at a rate of 4.1%. According to the second production forecast of the Central Bureau of Statistics, rice production in 1998 is forecast to drop further by 6.5%, to a total of 46.3 million tons. A similar situation occurred in the production of secondary crops. The case of soybean was the worst, where production declined continuously from 1.7 million tons in 1995 to 1.5 million tons in 1996 and 1.4 in 1997. Due to weather problems of La Nina, the 1998 production of soybeans is estimated to decline further as reflected by total production in the first eight months of the year.

The decline in domestic food supply was partially offset by an increase in food imports. Imports of rice, soybeans and sugar, in particular, increased significantly to offset the low level of domestic production. The import of wheat also increased to meet an increasing demand in relation with the food and social safety net program. The decline in rice production in 1997 was offset by rice imports of 3.6 million tons plus 4.3 million tons of wheat import. As mentioned before, for the 1998/99 fiscal year, the government plans to import a million tons of sugar, 700 tons of soybeans, and 4.1 million tons of rice.

Whether it is timely to undertake abrupt policy reforms in agriculture, when the delivery system is collapsed, is now a controversial policy issue. Many argue that before the subsidies are removed, for instance, the government should secure an effective food delivery system in order to reach those who are food insecure. In terms of fertilizer subsidy removal, negative reaction spread out not long after the policy was announced, since fertilizers not only disappeared from the market but their prices were too expensive. Many people suggested that subsidy elimination should instead be done gradually.

Policy recommendations

Trade liberalization would act to redistribute income between consumers and producers. In the case of import substitution commodities, such as rice, soybean and maize, trade liberalization through tariff reduction would increase the social welfare of society. In the case of export commodities such as cassava, an increase in world price resulting from trade liberalization would also increase the social welfare of society. The negative effects arising from trade liberalization can be attenuated if the government could act to help enhance productive efficiency. In addition, government policies should also act to better redistribute the welfare gains arising from trade liberalization.

Since unilateral trade liberalization on import substitution commodities would likely reduce the welfare of producers, at least in the short-run, attempts should be made so as to prevent producers from income squeeze. Agricultural policy reform should be directed to further increase farm productivity and marketing efficiency. Introduction of improved production technology, provision of farm credits, and improvement of infrastructure such as transportation facilities, are other policies expected to minimize the negative effects, and at the same time, open opportunities to gain from trade liberalization.

Government intervention on rice remains a debatable policy issue. Although the rice trade has been liberalized, the government is still attempting to use a floor price and market operation program to support producer incomes and stabilize consumer prices. Three options might be considered as follows. At one extreme, the government could abandon all efforts to stabilize domestic rice prices, abolish the public procurement and distribution system, and rely solely on private trade. The question is whether domestic producers and consumers would be willing to accept the consequences of considerable price volatility. Another extreme option would be to

restore the government's monopoly on rice imports and return to its pre-1998 rice price stabilization policy. The compromise option would be to retain many of its previous rice policy objectives, while implementing them in a more transparent and cost-effective way.

References

Erwidodo; and Prajogo U. Hadi. 1999. Effects of Trade Liberalization on Selected Food Crops in Indonesia. The final Country Report of the ESCAP-CGPRT TradeLib Project, the CGPRT Center, Bogor, Indonesia.

Erwidodo. 1999. Effects of Trade Liberalization on Agriculture in Indonesia: Institutional and Structural Aspects. Working Paper No. 41, CGPRT Center, Bogor, Indonesia.

Effects of Trade Liberalization on Agriculture in Japan

Hiroaki Kobayashi[*]

Introduction

Japan is known as the world's biggest food importing country in terms of both volume and value. Compared with other member countries in the TradeLib project, Japan has a longer history of agricultural trade liberalization. Nevertheless, Japan has been criticized because the support levels of agricultural policies are still high. The influence of comprehensive tariffication achieved in the UR agreement is not yet clear, but reductions of tariffs might cause serious damage to Japanese agriculture in the coming round of WTO, which is scheduled to be launched by the year 2000. Studies like TradeLib are becoming more and more important also in the Japanese context.

Summary of the study

History of the trade regime

Looking back at the history of agricultural trade polices since the early 1960s when Japan started to liberalize its economy, we can divided the period before the implementation of the UR Agreement into three phases according to how Japan opened its agricultural markets. The first phase started in the early 1960s. The second phase of import liberalization was triggered in 1968 by the Kennedy Round agreement and by bilateral negotiations with the US. Since the early 1980s, Japan has faced greater pressure to open its markets in international relationships (the third phase). Appreciation of the currency since 1985, in particular, increased nominal rates of protection of Japanese products and lowered competitiveness of domestic production. Important commodities such as beef and oranges were tarrified and the UR concluded in the 1990s.

According to the historical review, it is clear that the less liberalization was expected to affect domestic production, the earlier it was implemented. Among the main items liberalized in the first phase, domestic markets for maize, soybeans, sorghum and coffee are characterized by a relatively low level of domestic production, while domestic consumption of these products was expected to increase strongly due to economic growth. In the context of both government decision making and research activities, the later trade liberalization was considered, the more heated the dispute whether and how liberalization should actually be conducted.

When most agricultural imports were tariffied according to the UR agreement, only rice was exempted. The Japanese government took great case of the rice sector in the post-war period. Tariff levels of some products other than rice seem to be relatively high even under comprehensive tariffication, especially wheat, starch, pork, sugar, the designated dairy products and vegetable oil. In addition, tariffs applied to some commodities are sophisticated and

[*] Japan International Research Center for Agricultural Sciences, Japan.

complicated. Examples are seasonal differential duties on bananas and citrus fruits, application of tariff quota for many liberalized items, and introduction of emergency tariff measures on pork imports.

Table 1 Japanese food imports.

Commodity	Customs Rate of Duty in 1998 [3]	Date of Tariffication	Import Volume in 1997 ('000 mt)	Value ($US mil)	Country Origin
Rice [1] [2]	IQ (State trading)	1999	569	330	US, Australia, Thailand
Wheat [1]	58.33 yen/kg	1995	6,315	1,366	US, Canada, Australia
Maize for feed	Free	Before 19960	11,305	1,717	US
Sorghum for feed	Free	1964	2,595	370	US
Barley [1]	41.33 yen/kg	1995	1,413	227	Australia, Canada, US
Soybean meal	Free	1961	803	266	Brazil, US, India
Onion, fresh	0-9%	1961	175	56.4	US, New Zealand
Pumpkin, fresh	3.7%	1961	136	99.3	New Zealand, Mexico
Frozen vegetable	7.3-25.2%	1961	626	790	US, China, Taiwan
Dried vegetable	11-13.5% (7.5-9%)	1962	40.1	190	China, US
Banana	Apr-Sept; 26.7% (10%) Oct-Mar; 33.3% (20%)	1963	885	438	Philippines, Ecuador
Orange	Jun-Nov; 17.3% Dec-May; 34.7%	1991	171	150	US
Grapefruit	10%	1971	284	256	US, Israel
Soybean	Free	1961	5,057	1,759	US, Brazil
Rapeseed	Free	1971	2,062	727	Canada, Australia
Beef	42.30%	1991	647	2,623	US, Australia, New Zealand
Pork	Note [5]	1971	524	2,754	US, Denmark, Canada
Chicken	9~12.6%	1962	497	972	China, US, Brazil
Cheese [4]	26.6-31.5%	1953, 89	171	525	Australia, New Zealand, Denmark
SMP [1]	22.5%+419.33 yen/kg	1995	73.6	140	NZ, Ukraine, Australia
Ice cream	22.5~31.5%	1988	28.0	87.7	US, Australia, New Zealand
Raw sugar	10 yen/kg	1963	1,697	503	Australia, Thailand, Cuba
Tuna & skip jack	3.80%	1961	342	1,764	Taiwan, Korea, Indonesia
Shrimp & prawn [6]	1.4-5.7%	1961	305	3,562	India, Indonesia, Thailand
Eel [6]	3.8-9.6%	1961	68.9	1,144	China, Taiwan, Malaysia

Source: AGURO TOREDO HANDBUKKU, JETRO, various issues.

Note: [1] Tariffied according to the UR agreement. Lower rates are applied on the current access.

[2] Customs rate of specific duty of 351.17 yen/kg in 1999.

[3] Preferential duties in parentheses.

[4] Natural cheese was tariffied in 1953 and processed cheese in 1989.

[5] Specific duty, difference between Standard Import Price and CIF, or 4.5%.

[6] Including preparation.

When facing trade liberalization of a specific commodity, the Japanese government has introduced some schemes as alleviation measures to support the corresponding domestic

production, if liberalization was expected to cause a serious problem. Typical examples are found in the case of oil crops such as soybeans and rapeseed, sugar and beef calves. While specific purposes were not declared in law to alleviate the effects of liberalization, Japan is administering a large number of domestic support policies for some important products, such as rice, wheat, meat and dairy products. How and to what extent domestic production and farm incomes would be affected by changes in trade policies are closely linked to the effectiveness of those domestic measures.

A lot of historical surveys and general descriptions are found in the literature and in government statements regarding the effect of trade liberalization, whether it has been already implemented, is being implemented or will likely be implemented in the near future. Many articles analyze implementation issues, and some of them have conducted evaluations employing econometric analyses. The amount of research focusing on effects of import liberalization on domestic production and consumption has increased since the early 1980s.

When evaluating the possible effects of market access improvement of some foreign products, their quality compared to that of domestic products has to be taken into consideration, because Japanese consumers in general are very sensitive to quality, such as taste, freshness, grade, additives and contaminants, production date, etc. Good examples could be found in cases of rice and beef.

Institutional aspects and infrastructure

Equipment for transportation both from abroad and inland has not restricted international trade. Paving national routes was mostly completed by the late 1960s in accordance with the rapid increase in transportation, and containerization of cargo shipments by boats progressed dramatically in the 1970s. Cargo shipments by aircraft also contributed to the development of international trade of perishable products. While sanitary and phytosanitary measures, with good reason, have also worked to restrict imports of many agricultural products, import bans applied to several agricultural products have been lifted recently as a result of bilateral technical consultation between competent authorities.

To cope with the above two problems, increase in overseas production by Japanese companies and increased transfer of technology and know-how are noteworthy since the late 1980s. Anyway, higher processed products have tended to be imported more since the late 1980s.

Trend in agricultural trade and assessing the effects of policy changes

In post-war Japan imports dominated exports in the field of international trade of agricultural, forestry and fisheries (AFF) products. In 1963, exports of AFF products amounted to $US 564 million, i.e., 10.3% of $US 545 billion of total exports, while imports of AFF products amounted to $US 2.9 billion, i.e., 43.3% of the total imports. The percentage share of AFF products in Japanese exports decreased considerably to 1.3% in 1984 and to 0.7% in 1996, while nominal values of AFF product exports increased to $US 3.0 billion in 1996. Imports of AFF products in nominal value also increased drastically to $US 75.1 billion, but the share in total imports decreased to 21-25% in recent years. Trends in imports by major agricultural product are: (i) Japan accepted the minimum access commitment of rice according to the UR agreement; (ii) self-sufficiency ratios of other crops, such as wheat, soybeans, feed crops, raw sugar and oil crops have been very low since decades ago; and (iii) imports of livestock products have considerably increased since the late 1980s.

The overall decline of Japanese agricultural production in the post-war period has led to a lower rate of food self-sufficiency. It is clear that trade liberalization has played an important

part in the above trend in food self-sufficiency, but at the same time we have to take into consideration other basic conditions, such as resource endowment and dietary changes. Japanese agriculture as a whole has lost its comparative advantage in the process of economic development. The self-sufficiency of land-using crops such as wheat and pulses is extremely low, while rice is an exception. In order to identify the effects of trade liberalization, investigation and analysis have to be conducted carefully taking into account the above two considerations, i.e., domestic measures and basic economic conditions.

Major findings attained in the second term which focused on rice, crops related to sweeteners and beef can be summarized as follows:

- The current level of tariff on Japanese rice seems to be high, at 351 yen/kg. Protection of sweetener markets is managed in a quite complicated manner. A safeguard clause was established on beef import in accordance with the UR agreement, but it might not be very effective in the long run.
- Demand for rice and sweetener products will not increase significantly associated with reduction of market prices according to the results of empirical studies. This is not the case of beef. However, empirical analyses on demand for rice taking into consideration quality difference should be left to future work.
- A segmentation of the Japanese beef market into three components, i.e., Wagyu beef, dairy variety beef domestically produced and the aggregate of imported beef, is plausible in modeling work to evaluate the effects of policy changes.
- Supply functions of rice and sugar beet are hard to estimate by econometric techniques, because their production was effectively managed under quota for a long times.
- Location-specific features found in the production of Wagyu calves and crops related to sweetener products suggest an important point to be taken into consideration when we evaluate the effects of trade liberalization, because a larger part of the production of these commodities is located in less favored areas such as small islands and mountainous areas, and because these commodities play an important role for the farm economy in such districts while they are not very profitable. Production of sugarcane, sweet potatoes and Wagyu calves is labor intensive. Production of beet and potatoes is highly mechanized and achieves relatively high levels of profitability, on the other hand.
- According to the production cost analysis it will be difficult for most producers of rice and the crops related to sweetener products to survive under the situation of perfect trade liberalization or of significantly reduced levels of tariff. Further reductions of tariff on beef might seriously affect the dairy beef sector including milk production.
- In terms of economic surplus, a large benefit from the market will accrue to consumers under the situation of trade liberalization of rice, although part of this benefit might be offset through a possible decrease in externalities of rice production or paddy fields.

Analyses of trends in agricultural trade by commodity

Rice

The government has taken great care of rice production. A large number of small-scale producers cultivate rice, 2.9 million out of 3.4 million total farm households. An important function of paddy fields is land conservation. Consumption has decreased gradually to 67 kg per capita in 1997. Production control programs have been in place since 1970. Imports in 1993/94 were irregular due to the poor harvest. Minimum access imports were allowed since 1995, and imports were tariffied in April 1999. Consumers prefer japonica rice, and the price

wedge is large according to quality. Data on rice use and prices are given in Figure 1 and Table 1.

Figure 1 Food balance: rice.

Source: Food Balance Sheet, MAFF 1998.

Table 2 Rice prices by grade and origin (1,000 yen/60 kg, brown rice basis).

Wholesale Prices (Third Auction in 1997) of Semi-controlled Rice						
Variety	KOSHIHIKARI			KIRARA		AKITAKOMACHI
Prefecture						
Origin	UONUMA			HOKKAIDO		AKITA
Price	28.1			15.4		17.5
	Government Selling Price: Domestic Rice					
Grade	1	2	3	4	5	
Price	18.6	17.7	17.2	16.6	16.1	
	Government Selling Price: Imported Rice					
Grade	M1	M2	M3	M4	M5	L (White rice)
Price	18.6	17.7	17.2	16.6	16.1	10.2

Source: BEIKA NI KANSURU SIRYO (Files on Rice Prices), MAFF 1997.
Note: (1) Government Selling Price since April 1997.
(2) Excluding tax.

Wheat

Dietary changes drove the demand for wheat in the 1960s (Figure 2). Wheat is planted as a succeeding crop to rice usually. Production in the Hokkaido upland area expanded in 1975-1989. The domestic production decreased in spite of the higher NRP until the late 1970s. Production increased due to paddy field diversion and the support price in the 1980s. Wheat imports mostly come from the US under state trading.

Figure 2 Food balance: wheat.

Coarse grains

There is no domestic production of feed grains. Domestic barley is used for human consumption. Imports of feed grains increased according to the expansion of livestock production. Imports are free from duty to promote livestock production. The import has stagnated since the late 1980s (Figure 3).

Figure 3 Food balance: imports of feed grains.

Soybeans and vegetable oils

This is a typical case of tariff escalation: imports of raw materials are free from duty. In spite of the deficiency payments, domestic production is very limited (Figure 4). Paddy field diversion promoted the domestic production of soybeans. Soybean imports increased according to the growth of consumption. Imports of vegetable oils were tariffied in 1971, but they did not increase much (Figure 5). Palm oil dominates in the imports of vegetable oils.

Figure 4 Food balance: soybean.

Figure 5 Food balance: vegetable oils.

Fruits and vegetables

The domestic market for vegetables is potentially protected by transportation costs. In addition, SPS controls effectively limit importation of fruits and vegetables. Imports of citrus and its products were liberalized in recent years. Appreciation of the currency in the late 1980s accelerated vegetable imports. Overseas production of vegetables and their preparations has been promoted by Japanese trading companies since the late 1980s. Domestic production of fruits peaked in the late 1970s, because consumption of fresh products decreased (Figure 6). Domestic production of vegetables has decreased gradually since the late 1980s (Figure 7).

Figure 6 Food balance: fruits.

Figure 7 Food balance: vegetables.

Beef

Beef was handled by state trading before 1991, and then trade was liberalized under ad valorem duty of 70%. The IQ quantities were negotiated with exporting countries, i.e., the US, Australia and New Zealand. Imports increased remarkably due to appreciation of the currency in the mid 1990s (Figure 8). The rate of duty will be reduced to 38.5% in the year 2000. The beef market is segmented into Wagyu, dairy steer, dairy cow and imported beef (Figure 9). Products of Wagyu, a native variety, are strong in the domestic market. Production of dairy variety beef has not been affected seriously in terms of quantity. A larger part of Wagyu calf production is located in mountainous areas. Consumption absorbed the increase in beef imports.

Figure 8 Food balance: beef.

Figure 9 Price of beef carcasses in the Tokyo Meat Wholesale Market.

Source: Statistics on the Marketing of Livestock Products, MAFF.
Note: Monthly data: 1=January, 7=July.

Pork

Pork was tariffied in 1971, but the domestic market has been strongly protected by a differential duty. The Standard Import Price, an effective minimum import price, has continuously decreased from 650 yen/kg until 1986 to 383 yen/kg in the year 2000. Consumption stagnated, imports increased and production decreased (Figure 10).

Figure 10 Food balance: pork.

Poultry meat

The trade barrier to poultry meat has been relatively low, and the ad valorem duty has been decreased from around 20% until 1979 to around 10% by the year 2000. The situation after the late 1980s is very similar, but weak compared to the case of pork. Consumption has still increased until recent years (Figure 11).

Figure 11 Food balance: poultry meat.

Milk and diary products

Imports of products other than fresh milk and natural cheese have been administered under state trading, and domestic production has been strongly protected. The level of support to domestic production has been reduced since the 1980s. Consumption is strong, and stagnant production has caused increases in imports (Figure 12).

Figure 12 Food balance: milk and dairy products (raw milk equivalence).

Fishery products

Japan was a net exporting country of fishery products until the 1970s. Increases in consumption dominated those in production until the late 1980s. The fishing area has been limited due to the 200 nautical mile zone restriction. The catch of coastal fishes also decreased recently. There have been drastic increases in shrimps, tuna and eel consumption since the late 1980s.

Figure 13 Food balance: fishery products.

Sugar and starch

This is another case of tariff escalation: only raw sugar imports were liberalized in 1963. Imports of refined sugar and starch were tariffied in 1972 and 1995, respectively. Starch import is restricted under TQ with a limited amount of current access. The NRPs of sugar and starch have been high until recent years at 100-300%. Domestic production increased mainly due to increased production of beets in Hokkaido prefecture. Sugarcane production is located in less favored areas of Nansei Island. Small-scale and labor intensive production characterizes farming of cane and sweet potatoes. HFCS emerged in the sweetener market in the late 1970s. Imports of maize, a major material of starch, have been restricted under TQ since 1965. The quota is conditioned to use a designated amount of domestic materials. Sweetener demand has stagnated, and sugar imports are gradually decreasing (Figure 15).

Figure 14 Trends in the Japanese sweetener market.

Note: (1) Imported sugar is converted into refined sugar basis using a conversion rate of 95.5%.
(2) High fructose corn syrup is indicated from 1977.
(3) Solid basis for high fructose corn syrup.
(4) No conversion for brown sugar.

Figure 15 Production of starch by original material.

Source: Starch Balance Sheet, MAFF.

The effects of output price reductions based on the cost of production

Rice

No quality difference is considered. It is concluded that small-scale farmers will be seriously affected.

Table 3 Changes in net returns of rice production by district and by scale (%).

District/Scale	Without Change (1,000 yen)	Working Days	Unit Value Changes by 10%	20%	30%	40%
Hokkaido	2,473	256.3	74	48	22	-4
Tohoku	933	60.0	77	54	32	9
Hokuriku	696	48.0	73	46	19	-7
Kanto & Tosan	582	42.0	78	55	33	10
Tokai	238	31.4	63	26	-11	-48
Kinki	348	36.9	70	41	11	-18
Tyugoko	216	38.7	61	22	-17	-55

Shikoku	231	34.6	65	31	-4	-39
Kyusyu	399	41.1	73	46	18	-9
Average	539	41.1	74	49	23	-3
		(excluding Hokkaido Prefecture below)				
<0.5 ha	89	22.8	47	-6	-59	-112
0.5-1.0	322	38.4	70	39	9	-22
1.0-1.5	705	54.3	75	50	25	0
15.-20	1,107	71.4	77	55	32	10
2.0-3.0	1,654	92.8	79	57	36	14
2.0-2.5	1,548	86.0	79	57	36	14
2.5-3.0	1,887	106.9	78	57	35	13
>3.0	3,616	144.0	80	59	39	18
3.0-5.0	2,847	124.5	80	60	40	20
3.0-4.0	2,521	118.3	80	60	39	19
4.0-5.0	3,416	137.1	80	61	41	22
>5.0 ha	5,465	202.1	79	58	37	16

Note: Per household basis.

Crops related to sweeteners

Sugarcane

The income is not strongly affected reflecting the labor-intensive feature of production. There is a significant difference by production scale.

Table 4 Change in net returns by district and by scale: sugarcane (%).

District/Scale	Without Change (1,000 yen)	Working Days	Unit Value Changes by 10%	20%	30%	40%
Average	719	103.3	82	64	46	29
Kagoshima	684	78.3	80	59	39	19
Okinawa	737	116.7	83	67	50	34
0.1-0.5 ha	229	49.3	82	64	46	28
0.5-1.0	601	118.5	82	64	45	27
1.0-2.0	1,164	150.3	82	65	47	30
2.0-3.0	1,812	149.8	81	62	43	24
3.0-5.0	3,515	306.1	84	68	52	36
>5.0 ha	4,573	270.2	80	60	40	20

Note: Per household basis.

Sugar beet

Smaller-scale producers will be affected. The relatively high profitability will be maintained in larger-scale production under the small percentage of output price reduction, taking into consideration that production is restricted by quota.

Table 5 Changes in net returns by scale: sugar beet (%).

District/Scale	Without Change (1,000 yen)	Working Days	Unit Value Changes by 10%	20%	30%	40%
Average (Hokkaido)	2,590	127.1	77	55	32	10
0.1-0.3 ha	553	67.7	68	36	4	-27
3.0-5.0	1,543	85.2	75	50	25	1
5.0-7.0	2,525	113.4	78	55	33	10
>7.0	4,678	203.6	79	57	36	14
7.0-10.0	3,695	166.7	77	55	32	10
>10.0 ha	6,043	254.6	80	59	39	18

Note: Per household basis.

Sweet potato

Sweet potato is similar to sugarcane because of the labor-intensive production. Profitability at the current phase is very low (Table 6).

Potatoes

The relatively high levels of profitability in larger-scale production will remain under price reductions up to 10-20%. Small-scale producers will be seriously affected (Table 6). There is a considerable fluctuation in yield, but the 1997 harvest was good.

Table 6 Changes in net returns by scale: sweet potatoes and potatoes (%).

District/Scale	Without Change (1,000 yen)	Working Days	Unit Value Changes by 10%	20%	30%	40%
Sweet potatoes	312	40.8	84	68	53	37
Potatoes						
Average (Hokkaido)	2,060	66.2	77	54	31	8
0.1-1.0 ha	62	8.2	45	-10	-65	-120
1.0-3.0	408	28.6	68	37	5	-27
3.0-5.0	1,235	42.1	77	54	32	9
5.0-7.0	2,332	52.4	80	60	41	21
>7.0	3,205	102.2	77	54	31	7
7.0-10.0	2,787	88.4	78	55	33	10
>10.0 ha	3,914	125.8	76	52	27	3

Note: Per household basis.

Quantitative assessment of the effects of policy changes: the case of beef

Limitations of the previous methodology are (i) the commodity model does not consider input aspects, and (ii) the partial budget analysis has no linkage with the market situations of inputs and outputs.

The following points briefly describe the synthetic model:

- Market segmentation: Wagyu beef, dairy beef and the aggregate of imported beef.
- Two stage beef production: fattening and calf production.
- Medium term perspective: 3-7 years.

$$QP = A\left(\sum_j b_j \cdot X_j^p\right)^{-1/p}$$

- Production function in CES form:
  Where QP = production; X_j = input factor; A, b_j; constant, ρ; = $1/\sigma$ -1
- Input demand function is derived from the first order condition of profit maximization, i.e., max $\Pi = p \times QP - \sum r_j X_j$, s.t. production function, in terms of X_j,

$$\frac{\partial \Pi}{\partial X_j} \equiv p \cdot \frac{\partial QP}{\partial X_j} - \frac{\partial\left(\sum_j b_j \cdot X_j\right)}{\partial X_j} = 0$$

Where p = output price; r_j = price of factor j. We derive;

$$X_j = QP \cdot \left(b_j \cdot p / r_j\right)^{1/(1+\rho)}$$

At the equilibrium under the assumption of constant returns to scale;

$$A = \frac{p \cdot QP}{\sum_j r_j \cdot X_j} = 1, \qquad Q\ b_j = \frac{r_j}{p} \cdot \left(\frac{X_j}{QP}\right)^{(1+\rho)}$$

- Elasticities of production, input supply and output demand are assumed as:
  - Production (elasticity of substitution); $\sigma = 0.5$
  - Using cost shares from the Production Cost by MAFF. Shares of labor and roughage are derived residually.
  - Supply of farm-owned factors: Labor and roughage; 0.2, cows for calf production; 2.0.
  - Supply of other inputs (concentrate feed, machinery, building and other purchased); 2.0.
  - Output demand from the previous study; Kanada (1997).
  - Rest of world demand and supply: -0.3 and 0.3.
- Main exogenous variables: rate of import duty, exchange rate, deficiency payments for calf, dairy steer calf and meat of cull cows from the dairy sector.
- Estimating the effects of reductions of the rate of duty, based on the 1997 data.
- Main results of the simulation analysis:
  - The tariff reductions by 20% and 50% cause decreases in imported beef prices by 9% and 17%. Dairy beef price decreases by 4% and 8%. Wagyu beef price decreases only slightly.
  - The dairy steer calf price decreases by 15% and 27%.
  - Total beef consumption increases only slightly by 0.2% and 0.4%.
  - In terms of domestic production and consumption, dairy steer beef is affected more.
  - There are similar effects on Wagyu fattening and Wagyu calf production.
  - Consumers' cost decreases, and the economy will attain net gains.
  - The effects under the UR agreement scenario are marginal.

Table 7 Demand elasticities of beef by Kanada (1998).

Quantity of	Change in Price of					
	Wagyu	Dairy	Imported	Pork	Poultry	Seafood
Wagyu	-0.910	0.219	0.085	0.24	0.19	0.08
Dairy		-1.306	0.943	0.12	0.03	0.07
Imported		0.927	-0.564	0.12	0.03	0.07

Source: Nihon No Gyuniku Moderu No Sakusei To Yosoku (Modelling and Forescast of Japanese Beef Market), Chunsankanchi No Tiikiruikei To Chikusan Mondai (Livestock Sectors in the Mountainous Areas in Japan), Agricultural Policy Committee, Tokyo, pp. 64-76 (in Japanese).

Table 8 Estimated impacts of tariff reductions in beef imports.

	Base Value = Actual in 1997 (44.3%)	Bound Rate in 2000 (38.5%)	Reduction of ad Valorem Duty by: 20% (30.8%)	% (19.3%)
	(Thousand metric tons, carcass equivalent)			
Domestic production of beef	528.8	524.3	518.0	508.1
Wagyu	241.8	241.4	240.8	239.9
Dairy steer	157.9	153.7	148.0	139.0
Wagyu calf production (billion yen) *	204.8	204.4	203.8	202.9
Beef import	941.4	947.1	955.2	968.3
Consumption of beef	1,470.2	1,471.4	1,473.2	1,476.4
Rate of self-sufficiency	36.0	35.6	35.2	34.4
Market prices		(% change from the base)		
Wagyu beef	1,723	-0.6	-1.5	-2.9
Dairy beef	602	-1.8	-4.3	-8.1
Imported beef	500	-4.0	-9.3	-17.3
Wagyu calf	1.0	-0.6	-1.3	-2.6
Dairy steer calf	1.0	-6.6	-15.0	-27.3
		(% change from the base)		
Domestic production of beef	0	-0.9	-2.0	-3.9
Wagyu	0	-0.2	-0.4	-0.8
Dairy steer	0	-2.6	-6.2	-11.9
Wagyu calf production	0	-0.2	-0.5	-0.9
Beef import	0	0.6	1.5	2.9
Consumption of beef	0	0.1	0.2	0.4
Rate of self-sufficiency	0	-0.9	-2.2	-4.3
Surplus of:				
Producers	0	-1.6	-3.8	-7.2
Wagyu beef	0	-1.1	-2.5	-4.8
Dairy steer beef	0	-3.9	-9.1	-17.0
Wagyu calf	0	-0.8	-2.0	-3.8
Dairy sector	0	-2.6	-6.0	-11.1
Input suppliers	0	-1.5	-3.4	-6.5
Consumer's cost **	0	-11.6	-27.5	-52.9
Customs revenue	0	-12.5	-29.4	-55.3
Total surplus***	0	8.6	20.8	41.3

Note: (1) Values of customs rates of duty in parentheses.
(2) Dairy calf supply and beef production from dairy cow are assumed not to be changed.
* Value is and author's estimation and evaluated at 1997 nominal price.
**Evaluated by CSE, and by difference from the 0% tariff assumption.
*** Producer's surplus + input suppliers' surplus – consumers' cost.

Japanese food self-sufficiency and externality of agricultural land use

Decomposing change in self-sufficiency into supply and demand factors

Rate of self-sufficiency: S = QP/QC, where QP = production quantity; QC = total demand.

$$\Delta S = \Delta QP \cdot \frac{1}{QC} + \Delta\left(\frac{1}{QC}\right) \cdot QP$$

The first and second terms can be defined as supply and demand factors of the change.

- Production of several commodities has contributed to increase the self-sufficiency rates, but not in the case of land-using crops.
- Demand factor has dominated in the decreasing trends of food self-sufficiency.

Table 9 Change in the rate of self-sufficiency and its decomposition (% and point of percentage).

Commodity	Rate in 1995-97 (%)	Change from 1960-64	Decomposing Factor of: Production Factor	Demand Factor
Wheat	7.8	-24.7	-13.9	-10.8
Root crops	86.3	-13.9	-108.1	94.2
Soybeans	2.8	-17.4	-4.1	-13.3
Vegetables	85.4	-14.6	13.3	-27.9
Fruits	49.6	-45.6	8.3	-53.9
Beef	37.7	-59.2	26.0	-85.2
Pork	61.0	-37.7	48.7	-86.4
Poultry meat	67.3	-31.5	58.8	-90.3
Poultry eggs	96.0	-4.5	59.8	-64.3
Milk and dairy products	71.6	-15.9	50.7	-66.6
Fishery products	57.7	-47.6	5.2	-52.8
Sugar	33.1	-16.0	22.6	-6.6
Concentrate feed	10.3	-21.0	-2.8	-18.2

Source: Food Balance Sheet, MAFF, Togyo Nenkan, Boeki Nichinichi Tusin Sya.

Externality of agricultural land use, paddy fields in particular

Environment is one of topics to be stressed in the future development of trade issues. Multi-functionality of agricultural land is stressed in the Japanese context.

Table 10 Estimated cost and benefit of extra producer support in Japan (US$ 100 million).

		Change Due to $US 100 million Additional Support as: Market Price Support	Direct Payment	Input Subsidy
Cost:	Taxpayers	0.098	-1.000	-1.000
	Consumers	-1.098	0.000	0.000
	Total	-1.000	-1.000	-1.000
Benefit:	Farm household	0.519	0.584	0.205
	… of which land rent	0.230	0.339	0.090
	Input suppliers	0.168	0.137	0.307
	Sub total	0.688	0.721	0.513
Externality:	Water buffering	0.145	0.121	0.057
	Off-farm sediment flow	0.002	0.002	0.001
Total benefits:		0.835	0.845	0.570

Source: A Matrix Approach to Evaluating Japan's Crop Policy: A Tentative Version, OECD, COM/AGR/APM/TD/WP/RD (99)24, for official use, 1999.

Comments on the Japanese Country Report

Akira Oikawa[*]

In his presentation, Dr. Kobayashi has fully elaborated the issues of liberalization and impacts on Japanese agriculture. Dr. Kobayashi's report is quite agreeable from the administrative point of view. In particular, the multi-functionality of farmland that he referred to seems to be very important.

I would like to take this opportunity to share with you some additional information on domestic aspects of agricultural policy in Japan.

As Dr. Kobayashi pointed out, Japan's agriculture is facing a decrease of production and a decline of self-sufficiency. This reduction of domestic agriculture causes a decrease of farmers' income and stagnation of the local economy. It has become a serious social problem in Japan. At the same time, our consumers also feel uneasy about the reduction of our food self-sufficiency rate. So they are sympathetic to the strengthening of domestic agriculture. Both our farmers and consumers commonly feel the practical impact of globalization coming to agriculture and the food sector, so they recognize that reform cannot be avoided.

On the other hand, we have an old basic agricultural law that was established in 1961. This law aimed mainly at increasing farmers' income and welfare to the same level as urban people. However, the environment surrounding Japan has changed dramatically in recent years and we are faced with serious political, economic and social problems that force a thorough review of traditional systems. This law was already old-fashioned from these viewpoints and it expired or was revised in August of 1999.

Then the Japanese Government set up a study group under the cabinet secretariat to investigate the basic policy directions of food, agricultural and rural areas as we head towards the 21st century.

One document for your consideration is "Fundamental Principles of the Agricultural Policy Reform" the report or guideline which was submitted to the cabinet and approved by it in December 1998. Based on the philosophy of this guideline, the other document for consideration; "The Basic Law on Food, Agriculture and Rural Area" was established and approved by the parliament August 1999. (refer to Appendix at the end of this report).

Consistent with these guidelines, several other laws and measures including laws regarding agrarian matters, farmers' cooperative, price policy and so on, will be established or revised successively.

I have mentioned several key points regarding our new policy guidelines. Among these, the Japanese Government will emphasize the multi-functionality of agriculture so as to get support from our consumers and also the understanding of exporting countries at every occasion.

[*] JICA Expert, Chief Advisor to the Ministry of Agriculture, Republic of Indonesia.

The Effects of Agricultural Trade Liberalization on Malaysian Agriculture with Reference to the Palm Oil, Paddy and Tobacco Sub-Sectors

Tengku Mohd Ariff Tengku Ahmad and Ariffin Tawang[*]

Introduction

As the effects of agricultural trade liberalization begin to trickle down and start to affect the farmers and the public in general, many governments now realize that they may have to go through painful adjustment programs that can be politically unpopular. As such, even to this day, the debate on the benefits and effects of trade liberalization continues in spite of the fact that almost four years has lapsed since the signing of the Marrakesh Agreement and the formation of the World Trade Organization (WTO) to facilitate and implement global trade liberalization. The signing of the agreement is, in reality, is a testimony of consensus by signatory countries that freer trade is beneficial to everybody. However, despite the consensus, the debate on the advantages and disadvantages of trade liberalization not only continues but is also gaining momentum. This is especially so for liberalization in the agricultural sector, a sector which is deemed strategic by many countries in both the developing and the developed worlds. The real effects of these liberalization initiatives are still relatively uncertain especially in the developing countries including Malaysia. The objective of this study is therefore to examine the actual effects and extent of benefits to be gained and losses by Malaysia as a result of trade liberalization in agriculture. It focuses on two main areas, first on the institutional and structural aspects and the second on the effects on specific commodities with emphasis on three subsectors that are of social and economic importance to Malaysia, viz. palm oil, paddy and tobacco.

Institutional and structural aspects of trade liberalization

Policies in the agricultural sector

Agricultural development strategies of Malaysia in the 1960s and 1970s mainly focused on the objective of providing employment, as well earning and saving foreign exchange. Strategies and programs during the period were also designed to raise farm incomes to reduce poverty in agriculture. Export crops such as rubber, oil palm and cocoa were actively promoted. Many sub-sectors in agriculture were protected through tariffs and nontariff barriers such as quotas and other import barriers to protect producers and save foreign exchange in line with the import substitution strategy during this period. High emphasis was given to food security where a 100% self-sufficiency level (SSL) target was set for domestic rice production. The launching of the National Agricultural Policy (NAP 1984) marks the actual beginning of liberalization of the agricultural sector. Productivity, efficiency and competitiveness were the main focus of the policy. SSL for rice was rationalized to 85% of domestic consumption.

[*] Economic and Technology Management Research Centre, MARDI, Kuala Lumpur, Malaysia.

The period of 1984-1990 marks an important threshold in the transformation and development of the Malaysian economy. This era saw rapid expansion of the manufacturing sector and altered the relative importance of the agricultural sector. The overall development of the agricultural sector was beset with problems including more favorable policies towards manufacturing, labor shortages and increasing wages, increasing competition for land for other uses and others. A second NAP was introduced in 1992. Greater emphasis was given to addressing productivity, efficiency and competitiveness issues in the context of sustainable development and linkages with other sectors of the economy, in particular, the manufacturing sector. The development effort was geared towards modernization and commercialization of the sector and tariffs on many agricultural products were dismantled to prepare the sector for increased competitiveness. The food security issue was further rationalized and the SSL for rice was further revised downwards to 65%. Exports were further encouraged. The government also introduced new and additional incentives to attract investments in the agricultural sector.

Trade policy

Malaysia has a fairly liberal trade regime with low tariffs for most products. In 1993, the simple average and ad volorem tariff was 14%. The average was lower for agriculture at 10.4% while for industry it was 14.4%. The level of tariff protection is regularly revised to harmonize the tariff structure and reduce excessive protection. In most cases, tariffs on products are revised downwards, except for products that are "luxurious and unhealthy" such as luxury cars, cigarettes and alcohol, where increases on tariffs were imposed on the importation of these products. With respect to nontariff measures, Malaysia also practices import quotas and licensing (automatic and nonautomatic) on a fairly wide range of products. This is used both for restricting imports to protect certain industries, ensure adherence to sanitary, phytosanitary, safety, environment protection as well as copyright requirements and also for the purpose of monitoring. For rice, an import monopoly is given to BERNAS, the privatized state enterprise of the National Paddy and Rice Board. Export duties are levied on a number of primary commodities for revenue and to encourage domestic processing. Malaysia does not have any export subsidies but provides incentives such as tax rebates for certain promoted export-oriented industries.

The trade regime for agriculture

The effective duty rates on imported agricultural products are low by international standards and protection afforded to the industrial sector is still considerably higher than that of agriculture. Over the years, and more so in the recent 1990s, tariffs have been reduced on a broad range of products. This includes measures to meet Malaysia's obligations to international and regional trade agreements and also voluntary cuts to ensure competitiveness of agricultural sub-sectors in the long term. For agricultural products under chapters 1-24 of the Malaysian Customs Trade Classifications and Customs Duty Order, the number of tariff lines under the 0-5% category has increased from 318 lines to 866 lines from 1978-1997 or from 50.9% to almost 70% of all tariff lines in the 24 chapters. The reduction has been more rigorous for the 1988-1997 period, where the number of tariff lines under the 0-5% group has increased from 52% to almost 70%, an increase of almost 35% in terms of percentile points. Similarly, the number of tariff lines that fall under the 6-15% group has also increased from 21 lines in 1978 to 95 lines in 1988 or from 3.4% to 7.6% of the total tariff lines. Out of the 866 tariff lines that are in the 0-5% category, about 850 lines or 61% are actually duty free.

Policy measures for palm oil, rice, tobacco and upland crops

In general, the government maintains a non-interventionist policy for palm oil and the CGPRT crops such as maize, tapioca and sweet potato. In palm oil, direct policy measures that distort trade flows in the edible oil and fats market can be considered as insignificant. However, institutional support from the government for production, marketing, promotion and R&D of palm oil is strong. This includes direct involvement of government-owned agencies in production, processing and marketing, the provision of incentives and export credit financing. Maize, tapioca and sweet potato, being important raw materials for other agricultural industries, have always enjoyed a free market status. On the other hand, rice and tobacco, being important socio-economic crops, have been subjected to heavy intervention by the government in the marketplace. In the rice industry, a host of interventions are in place. This includes monopoly on imports, guaranteed minimun price (GMP) for paddy, controlled prices at milling, wholesale and retailing, fertilizer subsidy and price support. In addition, the government also provides drainage and irrigation facilities and undertakes R&D for rice. For tobacco, apart from being protected by high tariffs, the Malaysian tobacco industry also receives other forms of support from the government. The major interventions include licensing of curers and cigarette manufacturers and registering of growers, implementing production quotas to balance production with demand, setting proper grading and pricing of green and cured leaves and control and regulation of the marketing of green and cured leaves.

Liberalization effects: an assessment

Competitiveness of commodities

Analyses of ratios of f.o.b. and wholesales prices to world prices of major export commodities show that Malaysia is still competitive in the production and export of palm oil, cocoa beans, saw logs and pepper. Both the f.o.b. and wholesale prices to world price ratios were less than 1. The situation was not so for rubber where these ratios were consistently above 1 for the 1994-1996 period. For palm oil, the average f.o.b. to world price ratio for 1985-1990 was 0.66 compared to 0.84 for the 1991-1996 period. This indicates that although Malaysian palm oil can still be considered efficient and competitive, its competitiveness over the years seems to be lower in recent times. In general, although the ratios indicate that Malaysian cocoa beans and pepper were still competitive, labor problems and better economic returns from other crops, especially palm oil, caused many investors and producers to exit the industry for more lucrative ventures.

As expected, Malaysia is not competitive in rice and tobacco production. The ratios of wholesale price to world price of these commodities were consistently greater than 1. For rice, the average ratio increased from 1.17 for the 1985-1990 period to 1.51 for the 1991-1996 period, indicating decreasing economic efficiency and competitiveness.

Effects of liberalization in agriculture

Past literature indicated that most countries including the developing ones would benefit from trade liberation. However, these studies also indicated that large net-importing food countries would lose due to increase in prices of food items resulting from liberalization. Nevertheless, they would lose more if they do not liberalize when others liberalized.

For Malaysia, major gains are only expected from the exports of palm oil and wood products. Both the USA and EU that are major markets for Malaysian palm oil are expected to

reduce their tariffs by 19% for unprocessed or semi processed and 30% for processed oils and fats. Similarly, developing countries, which are becoming more important markets for Malaysian palm oil, are also reducing their tariffs on palm oil imports. Thailand and the Philippines, for example, are reducing them by 24% and 12%, respectively. For wood products, reduction in tariff escalation in developed countries would certainly benefit Malaysia. Other export crops including cocoa, rubber, and pepper are only expected to register modest gains, since Malaysia's competitiveness in exporting these products in the future is uncertain and further declines in exports of these commodities are expected.

In general, the Agricultural Agreement is not expected to being radical changes in the import tax regime for Malaysian agricultural products, since Malaysia's import tariffs for agricultural products are already low. However, the Agreement can severely affect the rice industry when all direct support including the price support is withdrawn from the industry. Many producers are expected to exit the industry as profit margins decrease. Unless the government undertakes massive infrastructural upgrading to increase current productivity levels, rice production is also expected to decline. Other protected sub-sectors such as tobacco, poultry and the swine sub-sectors are not expected to be significantly affected by the Agreement. However, the CEPT Agreement of ASEAN is expected to inflict significant impact on these industries, especially on the local tobacco industry. At the pessimistic end, full implementation of the CEPT Agreement for agricultural products may see a total collapse of the industry, as most ASEAN countries are more cost-effective producers of tobacco. Overall, the balance of gain and losses in agriculture for Malaysia will very much depend on the in-roads that will be made by Malaysian palm oil, as Malaysia will lose in terms of higher import prices and imports of food.

Commodity and location specific effects

In this section, the likely effects of agricultural trade liberalization on Malaysia are analyzed from two main perspectives. The first is from a commodity perspective, where the effects of trade liberalization on major important commodities with respect to prices, and consumers' and producers' welfare are evaluated. Subsequently, the study will proceed to analyze the effects of liberalization on the farmers involved with the commodity. It also analyzes the aggregate effects of the liberalization initiatives on the major areas where the farmers are located. It covers three major commodities as well producers involved with the commodity, i.e. palm oil, paddy and tobacco. The analyses of effects were viewed from the outcomes of implementing both the Agricultural Agreement of the Uruguay Round and also the CEPT Agreement (Common Effective Preferential Tariffs Agreement) of AFTA (ASEAN Free Trade Area). Malaysia is a signatory to both the agreements.

Palm oil

Palm oil is the largest agricultural industry in Malaysia. As an export-oriented industry which is devoid of any subsidies, this industry is expected to register gains as a result of global liberalization in trade in the oils and fats market. The findings from this study confirmed this expectation. Under a free trade environment, where the tariff by importing countries of Malaysian palm oil is zero, exports of Malaysian palm oil are expected increase by 1.973% (current weighted tariff of major importers = 15%). Using the 1996 data of exports of CPO equivalent of 7,587,855 tons, exports of CPO will increase by 149,708 tons under free market

conditions. Prices of palm oil in the domestic market would increased by about 3%, which translates into RM35 per ton of CPO equivalent. As such, consumers are expected to lose from this increase in price. Consumer welfare loss is estimated to be in the region of RM28 million. However, producers are expected to register gains. Fresh fruit bunch (FFB) prices were predicted to increase by 3.2% leading to an increase in producer surplus by RM263 million. Hence the net gain from totally liberalized international trade in palm oil for Malaysia was estimated to be RM235 million. Furthermore, Malaysia would also gain from increased foreign exchange earnings resulting from the increased exports of palm oil. In addition, Malaysia's benefit can be further expanded due to the requirement of other oilseed producers to reduce support to their industries, which are most likely to put upward pressure on prices of other edible oils such as soybean and corn oil. The higher prices of these products can result in a substitution effect that would be beneficial to palm oil.

Analysis of the likely effects of trade liberalization in palm oil at the farm level revealed that the net income of an average smallholder would increase by more than 9% or by RM147 per hectare per year. Considering that an average smallholder in an organized land scheme has about 3.5 hectares, the difference in income would be in the region of RM500.

This study recommended that continuous efforts to increase productivity and efficiency of the industry have to be undertaken to enhance competitiveness of the industry in the long run. In addition increased efforts are also necessary to further promote the use of palm oil to gain markets. The specific recommendations to enhance the industry include reducing labor requirements in the palm oil production processes, enhancing competitiveness through productivity gains via R&D and quality improvements, product development and diversification, strengthening institutional support and market diversification and deepening.

Paddy

Liberalization is expected to bring about rationalization of the Malaysian paddy and rice industry. Analyses from this study indicate that liberalization of the paddy and rice industry would, as expected, decrease domestic supply while increasing demand. There are overall efficiency and welfare gains that will benefit Malaysia, mainly brought about by the increase in consumer surplus and a decrease in government spending on subsidies. The total gain in consumer surplus brought about by liberalization is RM286.2 million, while the loss in producer welfare is estimated to be RM200.1 million. Net welfare gains are estimated at about RM86.1 million, excluding the reduction in government spending for subsidies. However, imports will increase quite significantly to cater for the increased demand-supply gap and farm incomes would be reduced by about 15%. Supply is predicted to decrease marginally by 1.34%.

Hence from the analysis, it appears that the food security objective might not be very much compromised even if total liberalization takes place. However, the poverty and income issue is a more delicate issue. While the analysis indicated only a small reduction in farm incomes, any decline in the income of the poor without compensation, however small, can lead to serious political and social consequences. Furthermore, there is a strong possibility that the actual decline in income by this study can be underestimated, resulting from the underestimation of the level of protection in the rice sector. Analyses on farm profitability based on actual survey of farmers indicated significant financial implications for the farmers. Depending on the tenure status and farm size, the farm income could be reduced by as much as 68% per season.

This study recommended several measures for the paddy and rice sub-sector to face up to the challenge of liberalization. They include new and additional infrastructure in new areas, infrastructural improvements in existing areas to induce productivity and efficiency gains to

increase competitiveness, farm consolidation and enhancing rural employment opportunities. In addition, the study also recommended that institutional support be strengthened especially in the areas of R&D, extension and technology transfer.

Tobacco

Complete liberalization in the tobacco sub-sector would most likely bring about serious consequences to the industry due to the high degree of protection that the industry now enjoys. Estimates from this study indicate that the supply of green uncured leaves would be reduced by more than 73% with producer loss amounting to RM17.32 million. Consumers would gain from cheaper tobacco and the net gain in consumer surplus is estimated to be RM60.61 million. However imports would jump by 12,758 tons with an estimated cost of RM170 million. In addition, the government would also lose about RM500 million in revenue in terms of tobacco-related taxes.

Analysis at the farm level showed that, for the average farmer in a major tobacco growing area operating a farm size of 0.175 hectares, gross income would be reduced to RM952 per season down from the pre-liberalization scenario of RM1,516.00. Net returns would turn negative although returns to labor are still positive at RM484.57. Net income would decline by almost 111% and returns to labor decline by almost 54%. This reduction in income is due to the expected decline in the price of tobacco in the domestic market resulting from cheaper imports.

The following recommendations are put forward for the tobacco industry to face liberalization:

- Implementing a gradual structural adjustment program in the tobacco industry:
  The structural adjustment can start by gradually dismantling the tobacco tariff especially to ASEAN countries so that the process of adjustment can begin now.
- Altering the structure of production:
  The tobacco industry in its present form is certainly non-viable. The curer system whereby uncured and cured tobacco production processes are separated and under different producer groups has led to high inefficiency in the industry. This system needs to be phased out and replaced with the grower-curer system or a system that will allow increased economy of scale and lower costs of production. Data from NTB indicated that the average cost of cured tobacco under the grower-curer system ranges between RM6.85 - RM7.38 per kg, while that of the curer system averaged RM11.41. The grower-curer system managed to cut cost of production by almost 38%. With average costs in the region of RM6.50, Malaysia would be in better position to compete with Thailand, where costs of production was reported to be in the region of RM4.50/kg.

- Implementing an income support program:
  A de-coupled income support program would facilitate farmers to gradually acquire new knowledge and venture into other economic activities. This direct income support would only be given for a specified number of years, giving sufficient time for the farmers to adjust to changing economic conditions and opportunities.
- Other facilitating programs:
  Other programs that will assist the industry include:
  - improving infrastructure in selected areas
  - institutional support to focus on adjustment programs

- R&D on alternative crops and increasing productivity of tobacco under alternative production systems.

Conclusions

The study on the effects of agricultural trade liberalization on Malaysian agriculture confirmed the fact that local industries that are competitive will gain while inefficient domestic industries will lose from the liberalization initiatives. Uncompetitive industries in the Malaysian case, such as rice and tobacco are expected to be naturally downsized as the effects of liberalization work their way through the economy. Eventually there will be overall efficiency gains to the economy as resources are re-allocated to the more productive sectors of the economy.

In facing the challenges and opportunities in agricultural trade liberalization, the approach that has to be adopted in further developing the industries must be market-based. Society-based strategies may no longer be applicable in this globalization era. Strategies and programs to develop specific enterprises may now need to be differentiated from social programs like helping the poor. Competitiveness is not the same as welfare.

One of the market-based strategies that developing countries like Malaysia need to adopt would be to strengthen the five pillars of economic foundation, i.e. infrastructure, finance and capital institutional support, R&D and technology as well as human resource development. Strengthening the economic foundation in a particular sector would enable the sector to be more efficient. Previous allocation that was used to support subsidies should now be re-allocated towards the strengthening of these foundations.

In summary the following recommendations that are globally applicable to all sectors can be considered:

- Strengthening economic foundations to increase efficiency of agricultural industries;
- preparing for adjustments in the affected sectors including planning for income support programs;
- widening product range and value-added to increase product competitiveness and industry profits;
- enhancing marketing efforts for market diversification and deepening;
- altering the structure of production to allow farm consolidation and operation of better economy of scale; and
- increasing rural industrialization to create better employment and income-generating activities from competitive industries.

Comments on the Malaysian Country Report

Abdul Aziz Abdul Rahman[*]

Introduction

The comments presented hereafter are based on scrutiny of the two reports on the Malaysian case study entitled: Effects of trade Liberalization on Agriculture in Malaysia: Institutional and Structural Aspects (CGPRT Centre Working Paper 34) and the Effects of Agricultural Trade Liberalization in Malaysia: the Case for Palm Oil, Paddy and Tobacco, prepared by Tengku Mohd. Arif Tengku Ahmad and Ariffin Tawang.

General comments

The two constituent reports provide comprehensive information concerning agricultural sector performance, development, planning and policy, and issues, prospects and challenges facing the sector in the light of globalization and trade liberalization. For this the Malaysian country researchers have to be commended for their painstaking effort to collate all available information and to undertake modest empirical analyses to examine the issues at hand.

In studying the effects of trade liberalization on agriculture the researchers have correctly sequenced their task, by first looking at the broad and macro implications of liberalization on the agricultural sector as a whole, and then focusing on the micro impacts of trade liberalization on farm production units and enterprises. It is essential that the effects of agricultural trade liberalization be analyzed at both macro and micro levels, since these can differ significantly. This is important because different policies and strategies might be required at the macro and micro levels.

Perhaps the case study on Malaysia can be made more revealing if analyses of the differential impacts of trade liberalization on the individual agricultural sectors *vis-à-vis* non-agricultural, that is, the industrial sector, and on small holdings *vis-à-vis* plantations, can also be undertaken. However, it must be admitted that such analyses can be extensive, requiring a great deal of additional data and statistical information and may not fall within the scope of the entire network project programme.

Impact of agricultural trade liberalization in Malaysia

A range of trade liberalization measures has already been put in place under the Uruguay Round Agreement on Agriculture. They include market access, export protection and domestic support. In addition there is also the Sanitary and Phyto-Sanitary Agreement which every country has to contend with.

It is obvious that two things will happen under liberalization. First, those sectors that are efficient and competitive and devoid of any protection measures will be well poised to

[*] Centre for Policy Studies, Universiti Putra, Malaysia.

capitalize the benefits that may accrue from liberalization. Second, those sectors that operate behind some protection barrier, and accordingly are not competitive, will most likely face the brunt of trade liberalization. For these latter sectors, the prospect to prevail will most likely be dampened unless they can make a turnaround to become globally competitive.

Malaysian agriculture is generally not highly protected. The sectors that are strongly protected by various means are paddy (and rice), pineapples, tobacco and some livestock. So looking at the overall situation Malaysia agriculture may be regarded as competitive. The export crop sectors of rubber, oil palm and cocoa are highly competitive and in fact they have been taxed to varying degrees over time to provide resources for national development. Among the protected crops paddy has received the greatest protection in terms of the range of instruments applied as well as the degree of government intervention. In the paddy and rice sector government intervention may be seen at all levels namely input supplies, production, processing, marketing and procurement and consumption. These have been justified on the premise of national food security and the need to protect the paddy farmers, who are a significant group socio-politically, aside from the need to protect general consumers.

Another subject that needs to be examined seriously in the context of agricultural development in Malaysia is the impact of trade policies on agriculture *vis-à-vis* industry. The design and structure of these policies can also have important implications on the direction of agricultural growth.

Available studies based on measures of Nominal Protective Rates (NPRs) and Effective Protection Rates (EPRs) have convincingly shown that in Malaysia the implementation of industrial protection on manufacturing and export taxation on export crops has had the effect of making the manufacturing sector more attractive over time than export crops. Not only is the manufacturing price level consistently higher than that of the individual export crops - rubber oil palm and coca but also its income.

The inference that can be made is that the export crops have been consistently "discriminated" against by the trade, industrial and other macro policy that clearly supported manufacturing. On the other hand the paddy sector, through various support programmes and instruments, has been provided with greater price and income protection over time. The overall impact of theses programmes and instruments has been to make this sector relatively attractive compared to export crops.

The second point concerns the effect of trade policies on the plantation *vis-à-vis* smallholder sectors. The available studies also have shown that the implementation of trade policies in Malaysia in the form of export tax and cess on export crops and price and other support on paddy and manufacturing has affected the smallholders much more than the plantations. This has been found to be true for rubber, oil palm and to a lesser extent, cocoa. The reason why smallholders have been more adversely affected is because they lack transport and marketing facilities. The generally scattered and unorganized smallholders are less able to wield any substantial market power. As a result much of the tax burden that has been imposed on rubber exporters and palm oil millers is shifted to the smallholders, with the eventual impact of reducing their farm gate prices and incomes.

These findings show that trade policies can have different impacts on different agricultural sectors, and that the trade instruments, such as export tax and its burden can be shifted from exporters to producers. Secondly, trade policies when implemented together with industrial and other macro policies that render greater protection to non-agriculture (such as manufacturing) can "discriminate" against agriculture. Nonetheless, trade policies can also render particular agricultural sectors attractive, if these accord some level of protection to the producers.

Liberalization and its implications

Trade liberalization will certainly alter the relative prices and incomes of various sectors. In the case of Malaysia. The removal/lessening of export taxes on rubber and palm oil has now lessened the "discriminatory" effects which these taxes had previously shown. The effect has been to make rubber and palm oil production more attractive in terms of farm prices and income relative to paddy growing or manufacturing.

The reduction of industrial protection, mainly through tariffication of manufactures, will certainly improve agricultural prices and incomes compared to non-agriculture (manufacturing), Accordingly, this will bring about yet greater attractiveness of export crops to investors as the discriminatory effect of the trade policy on agriculture becomes less. Thus liberalization can be expected to improve both the NRP as well as the ERP of export crops.

In the case of paddy, liberalization will sharply reduce the level of support that has been accorded to it. The elimination of import quotas, import licensing regulations, tariffs and other instruments in addition to domestic support in the form of guaranteed minimum price, fertilizer and output price subsidy will reduce the extent of protection accorded to this sector. This sector will definitely be subjected to stiff competition from the rice imported from more competitive countries.

The same situation holds for the other protected agricultural sectors such as pineapples, tobacco and livestock. These sectors will have to face greater competition from overseas producers once the protective barriers - both tariff and non-tariff barriers (NTBs) - are lifted.

Enhancing competitiveness

A strategic option for Malaysian agriculture to meet the challenges of liberalization would be to enhance its competitiveness. This means improving steeply the productivity and efficiency of production and shifting towards high technology and knowledge-intensive methods of production. The adoption of improved production methods and systems will lead to a higher value added content in the production structure and thereon better ERP level, thereby increasing further the attractiveness of agriculture to investors.

To date numerous technological breakthroughs have been achieved for crops and livestock production and these should be capitalized on by the sector in its effort to become more competitive.

Given the numerous opportunities under the Green Box provision, the focus now should be on the provision of economic foundations - infrastructure, capital and finance, human resource development, technology and institutional development - which generally are not market distorting. In Malaysia therefore, as correctly pointed out by the researchers, the thrust of the programme to enhance the competitiveness of agriculture should be on these foundations.

Effects of Trade Liberalization on Selected Agricultural Commodities in Pakistan

Muhammad Ramzan Akhtar[*]

Introduction

Background

Pakistan has been a founding member of the General Agreement on Tariffs and Trade (GATT) since 1948. It has participated in most of the rounds of multilateral trade negotiations and formally signed the Final Act Embodying the Results of the Uruguay Round of Multilateral Trade Negotiations in Marrakesh on April 15, 1994. The UR provided substantial new trading opportunities, strengthened international trading rules, and reinforced the institutional foundation of the world trading system. It is the major focus of the trade policy of Pakistan to bring all the sectors, especially agriculture, under the Uruguay Round agreement. Based upon various research reports, discussions, and meetings regarding its possible impacts on developing countries like Pakistan (e.g., Goldin and van der Mensbrugghe 1995), it is expected that agreements on agriculture will make Pakistan's agricultural products more competitive in the long run.

The agricultural economy of Pakistan: prospects and challenges

As in many other developing countries, the agricultural sector occupies an important place in the economy of Pakistan. The importance of the agricultural sector in the economy of Pakistan may be determined in three ways. Firstly, the sector provides food to consumers and fibre to domestic industry. Secondly, it is a major source of foreign exchange earnings, and thirdly it provides a market to industrial production. This sector has both strong backward linkages (by buying agricultural inputs including fertilizers, insecticides/pesticides, farm machinery, etc.) and forward linkages (by providing raw material to food and fibre processing industries in the industrial sector). Also it is the main source of around two-thirds of foreign exchange earnings in the form of raw and semi-finished products, it provides employment to over 50% of the labour force and is the main source of income in the rural areas, which constitute about 70% of the total population. The contribution of the agricultural sector in the country's GDP is around 25%.

Pakistan is blessed with diverse agro-climatic conditions and one of the best irrigation systems in the world. Considering these conditions, various crops may be grown almost around the year. It is possible to grow tropical, sub-tropical and temperate crops in the country. Major crops grown in Pakistan are wheat, cotton, rice, sugarcane, gram, maize, sorghum, millet, rapeseed/mustard and tobacco. Minor crops include pulses (chickpea, lentil, mungbean, and black gram), potato, onion, chilli, garlic, etc. Upland crops (coarse grain, pulses, roots and tuber crops) occupy an important position in the agricultural sector of Pakistan.

Keeping in view the present global economic scenario and the speed with which Pakistan is opening its product market, there is a widespread concern about the effects of trade

[*] Social Sciences Institute, National Agricultural Research Centre, Islamabad, Pakistan.

liberalization on agriculture. Improving the economy of the agricultural sector, achieving self-sufficiency in food, and improving farmers' income are the top priorities of the country. Considering the present structure of the agricultural sector, the natural resource base, policy environment, trade-related infrastructure, political economy, etc., the country is gradually moving towards liberalized trade in agriculture, and it is taking certain steps to support the domestic agricultural sector to compete in the international market. For example, the government has considerably reduced the tariff rates, increased the support prices of major commodities, opened up markets for many traded goods, provided credit to small farms, and accelerated the privatization process of public institutions, etc. To fully implement all the requirements of the UR agreement on agriculture, the country has a long way to go, especially in terms of improving the trade infrastructure, quality of the products, environmental issues and issues related to sanitary and phytosanitary requirements of the agreement. To smoothly proceed towards a more liberalized economic environment, the expected effects of trade liberalization related to various agricultural products, especially those from the smallholder sector, need to be identified in a country like Pakistan.

Objectives

The present study is the second part of the project on the 'Impact of Trade Liberalization on Agriculture in the Asian Region" by the United Nations ESCAP/CGPRT Centre, Bogor, Indonesia. The first part of this project has been completed and the report entitled "Effects of Trade Liberalization on Agriculture in Pakistan: Institutional and Structural Aspects" has been published by the CGPRT Centre (Akhtar 1998). The present study mainly focuses on the following objectives:

- To present an overview of the impact of UR agreement on agriculture in Pakistan, trading policies and international trading patterns for rice, wheat and maize.
- To analyze the effects of trade liberalization on major food commodities including rice, wheat and maize in Pakistan.
- To determine the impact of trade liberalization on rice, wheat and maize at the farm level in Punjab, Pakistan.
- To identify problems, prospects, strategies and recommendations for a smooth adjustment process of trade liberalization in agriculture in Pakistan.

Commodity coverage

The impact of trade liberalization on agriculture in Pakistan is analyzed and the following food commodities are covered: wheat, Basmati rice, non-Basmati rice (mainly IRRI-type coarse rice) and maize.

Conceptual and analytical approach

Government intervention in agriculture influences product and input markets. Frequently used measures include tariffs, quotas and subsidies designed for trade protection or enhancement, and price support designed to increase farm income.

As shown in Figure 1, the impact of a tariff in the importing country is to raise domestic prices to P_t, to increase quantity supplied to S_i' and to decrease quantity demanded to D_i'. This results in a decrease in imports from S_i - D_i to S_i' - D_i'. The geometric areas A-E can identify the welfare effects:

- A is an increase in producer surplus, as producers produce more with the higher price Pt. This area is a transfer from consumers as they pay more for the increase in quantity supplied.
- B is the extra cost to produce the increase in supply above what it would cost to import the same quantity, and represents a deadweight social welfare loss to society, since the resources representing area B could have been used to produce something else in the country.
- C is revenue that is collected by the importing government from domestic consumers. The final benefit of area C depends on how the government uses the taxes.
- D is the loss in consumer surplus when consumers reduce their consumption because of the higher price Pt. This area represents a deadweight social welfare loss because it is not a transfer to another group in society.
- E and F represent savings in foreign exchange for the importing country and losses in foreign exchange to the exporting country. They are not social welfare losses to the importing country because they represent the opportunity cost of buying the imports.

Figure 1 Welfare effects of a tariff (import quota) in the importing country.

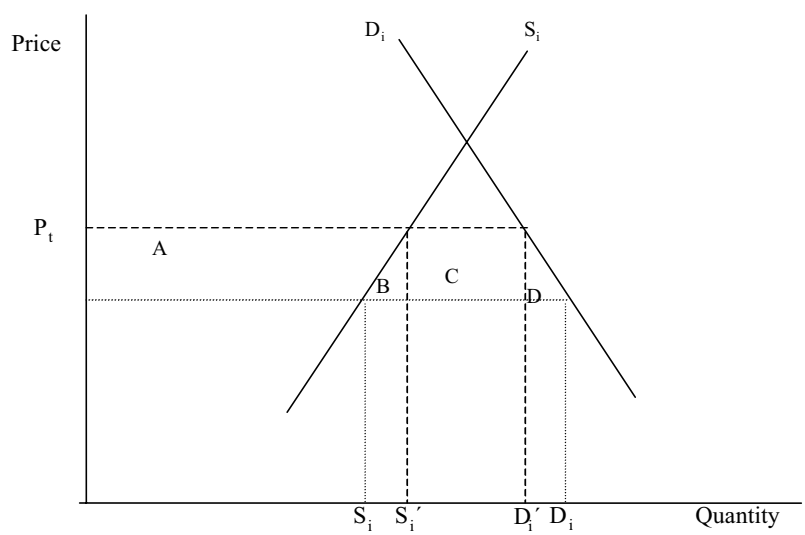

Using the welfare analysis, approach the effects of trade liberalization on major agricultural commodities are estimated. The following equations were estimated to conduct the quantitative analysis:

In Figure 1, consumer surplus and producer surplus are:

Consumer surplus = $(P_t - P_w)[D_i' + (D_i - D_i')*0.5]$

Producer surplus = $(P_t - P_w)[S_i + (S_i' - S_i)*0.5]$

A simple model to estimate domestic demand and supply, and price linkage equations is:

a) Domestic demand $(QD_i) = f(PC_i, I)$

Where QD_i = Total quantity demanded of commodity i;
PC_i = Domestic market price of commodity i;
I = Income
Elasticity of demand (E_{pc}) = $(\%\Delta QD_i) / (\%\Delta PC_i)$

b) Domestic supply (QS_i) = $f(PF_i, T)$
Where QS_i = Total quantity supply of commodity i;
PF_i = Price of commodity i at farm level;
T = Trend.
Elasticity of supply (EP_f) = $(\%\Delta QS_i) / (\%\Delta PF_i)$

c) Price linkage
$PC_i = P_{cif}$ + Tariff + Transfer cost
$PF_i = \alpha + \beta * PC_i$
Elasticity of price transmission (E_t) = $(\%\Delta PF_i) / (\%\Delta PC_i)$

Trade policy regime

At the time of independence in 1947, Pakistan had inherited a very poor industrial base and was predominantly an agricultural economy. To develop a strong industrial base, emphasize was placed more on import substitution policy, although efforts were also made to promote exports. The government imposed restrictions and bans on imports of industrial products, and devices like quotas, licensing, and bans were used to protect domestic producers from their foreign competitors. However, as a result of following this inward-looking trade policy until recently, the country's participation in international trade has been very little (0.15% in 1995), and exports comprised only 13.5% of GDP while imports represented 18.3% during 1995/96 (Akhtar 1998).

Realizing the inefficiency of the inward-looking trade policy, the government took a number of steps towards a freer economy and gradually introduced comprehensive macroeconomic and structural reforms in the country, for example, shifting from a fixed exchange rate to a policy of flexible exchange rate, removing the subsidy on various agricultural inputs, privatizing many financial institutions and other trade institutions, reducing tariffs, etc. The main objective of the government was to move towards greater reliance on market forces, opening up of its economy to foreign competition, as it sought to meet the country's obligations to globalization of merchandized trade under WTO.

Pakistan's total trade fluctuated widely during the last two decades or so and reached a record of US$ 20.5 billion in 1995/96 from only US$ 8.4 billion in 1980/81 (increase by 142%). Total exports increased significantly from only US$ 2.96 billion in 1980/81 to US$ 8.7 billion in 1997/98, at a growth rate of 6.5% per annum. Total exports, imports and trade balance are given in Table 1.

Table 1 Balance of trade in Pakistan (US$ million).

F/Year	Exports	Imports	Trade Balance	Exports as % of Imports
1980/81	2,958	5,409	-2,451	54.69
1981/82	2,464	5,622	-3,158	43.83
1982/83	2,694	5,357	-2,663	50.29
1983/84	2,768	5,685	-2,917	48.69
1984/85	2,491	5,906	-3,415	42.18
1985/86	3,070	5,634	-2,564	54.49
1986/87	3,686	5,380	-1,694	68.51
1987/88	4,455	6,391	-1,936	69.71
1988/89	4,661	7,034	-2,373	66.26
1989/90	4,654	6,935	-1,981	67.11
1990/91	6,131	7,619	-1,488	80.47
1991/92	6,904	9,252	-2,348	74.62
1992/93	6,813	9,941	-3,128	68.53
1993/94	6,830	8,541	-1,711	79.97
1994/95	8,162	10,376	-2,214	78.66
1995/96	8,803	11,815	-3,012	74.51
1996/97	8,363	11,895	-3,532	70.31
1997/98	8,667	10,070	-1,403	86.07
Growth rate/year	6.53	3.72	-3.23	2.70

Note: Financial year is from July to June.
Source: Pakistan Economic Survey 1997-98.

The government introduced a number of trade-related policies to improve exports. Some examples are devaluation of the Pakistan rupee in terms of the US dollar by more than 100% in the 1990s; introduction of a package of incentives together with improvement in the export finance scheme; privatization of trade-related public institutions; and increased participation of the private sector. However, all these measures did not improve exports much (compared to other developing countries) and did not control the trade balance. Trade performance would have been better had the leaf curl virus not affected cotton in 1993.

Like exports, imports also fluctuated during the last 20 years or so. Total imports rose sharply from only US$ 5.41 billion in 1980/81 to US$ 10.10 billion during 1997/98, increasing at an annual growth rate of 3.7% during this time. The slowdown in import growth during the 1980s was mainly due to a fall in world prices of Pakistan's major imports (mainly petroleum products and edible oils). During the 1990s, imports increased mainly due to the extra-ordinary increase in machinery imports, chemicals and transport equipment. The other main factors of increased imports were the adoption of liberal import policies, considerable reduction in import tariffs and improvements in the foreign and domestic investment policies. Imports also increased considerably during the early 1990s, mainly due to a surge in oil prices caused by the Gulf crisis. The share of the imports in GDP was between 16-19% in the 1990s.

Pakistan's agricultural trade

In Pakistan, agriculture is an important source of foreign exchange earnings through exports of agricultural raw and base products. Raw cotton and its manufactured products, rice, leather and its products, fruits and vegetables, spices, and fish and its preparations are the major export commodities of Pakistan (Table 2). Pakistan is mainly dependent on the export of raw cotton and textile related products, which are subject to climatic hazards year after year. Export earnings from cotton and rice fluctuated considerably due to climatic factors. Export earnings

from fruits and vegetables did not increase significantly during the last ten years or so. Export earnings from fish and fish preparations more than doubled during the last two decades.

Table 2 Agricultural exports of principal commodities of Pakistan (US$ million).

F/Year	Raw Cotton	Rice [1]	Fruits & Vegetables	Fish and Products	Others [2]
1981/82	275.6	387.2	31.24	74.1	28.28
1982/83	304.9	288.1	42.04	70.2	32.1
1983/84	132.4	422.5	39.7	75.1	31.56
1984/85	297.2	222.1	37.93	81.7	39.35
1985/86	513.3	342.3	41.84	82.6	35.7
1986/87	446.3	299.7	42.95	112.5	38.49
1987/88	610	363.1	50.31	124.3	47.25
1988/89	929.6	303.6	46.99	110.3	46.73
1989/90	443	239.2	53.6	94.4	42.94
1990/91	411.8	346.3	49.02	114.9	32.88
1991/92	518.3	415.7	47.28	114.7	45.5
1992/93	270.8	317.1	52.72	181.7	35.9
1993/94	79.5	242.2	56.3	154.7	33.37
1994/95	62.2	454.2	50.81	154.3	35.22
1995/96	520.3	511.9	54.14	140.7	22.26
1996/97	31.9	474.4	81.3	149.1	39.79
1997/98	127.3	570.5	85.1	171.3	45.43
Growth rate/year	-4.71	2.45	6.46	5.38	3.01

Note: Financial year is from July to June.
[1] Rice includes Basmati and non-Basmati rice.
[2] Seeds of coriander, poppy, cumin and castor, natural honey, chilies, and raw wool.
Source: International Trade Organization Wing, Ministry of Commerce, Islamabad, Pakistan, 1997.

Imports of agricultural commodities contribute considerably to the negative trade balance of Pakistan. The major agriculture import commodities are edible oil, grains, pulses and flour, tea and coffee, and milk and its products. These commodities accounted for more than half of the negative trade balance. The value of major agriculture imports from 1980/81 to 1997/98 is given in Table 3. In addition to the drain of foreign exchange on import of food-related agricultural commodities, Pakistan also spent a considerably amount of foreign exchange on import of agricultural inputs, which include fertilizers (mainly DAP), seeds, pesticide/insecticide and agricultural machinery.

Table 3 Agricultural imports of principal commodities in Pakistan (US$ million).

F/Year	Edible Oil	Wheat	Tea and Coffee	Milk and Products
1980/81	264.86	63.91	119.47	39.54
1981/82	341.38	80.81	110.06	39.61
1982/83	288.46	68.69	131.84	45.83
1983/84	530.73	63.71	190.36	42.96
1984/85	458.98	181.56	231.47	34.32
1985/86	379.88	292.4	134.84	29.44
1986/87	236.45	68.91	154.26	31.78
1987/88	441.59	105.14	127.79	23.29
1988/89	446.24	364.82	154.89	31.55
1989/90	384.89	400.61	180.96	23.77
1990/91	401.89	139.06	166.53	31.55
1991/92	403.86	341.56	173.31	34.50
1992/93	585.11	465.34	207.85	31.1
1993/94	487.58	239.86	186.46	20.86
1994/95	998.03	413.44	187.99	17.75
1995/96	854.22	452.53	170.79	31.41
1996/97	611.5	485.36	134.2	17.29
1997/98	768.6	707.87	226.7	na
Growth rate/year	6.47	15.20	3.84	-5.04

Note: Financial year is from July to June.
Source: International Trade Organization Wing, Ministry of Commerce, Islamabad, 1998.

Effects of trade liberalization at the national level

Wheat

Wheat is the most important food crop as it is the staple food and the largest cereal crop in terms of area in Pakistan. It occupies around 67% of the total area under food crops and about 37% of the total cultivated area in Pakistan. Since 1960/61 wheat area increased by almost 75% up to 1997/98. Area under wheat during 1960/61 was only 4.64 million ha; it increased to 6.98 million ha in 1980/81 and to 8.35 million ha during 1997/98. Similarly wheat production increased considerably during the same period. Wheat production increased from only 3.8 million tons in 1960/61 to 18.69 million tons during 1997/98. Wheat yield increased by more than 60% from 1960/61 to 1975/76 (during the green revolution period), and after that until 1990, it was stagnant around 1.8 tons/ha. During 1990, the government considerably increased the support price of wheat, which resulted in significant improvement in wheat yields which increased from 1.84 tons/ha to 2.2 tons/ha (15% increase) during 1997/98.

To assess the impact of trade liberalization on wheat at the national level in Pakistan, supply, demand and price linkage equations were estimated using standard regression analysis. Using the results of the FAO study (1995) and assuming that Pakistan will stop subsidizing wheat, it is expected that prices of wheat will increase around 14% in the country after opening up its market for other wheat exporters in the world. To get more reliable estimates, all the equations were also corrected for autocorrelation. All the equations were used to assess the impact of a 7% increase in the international prices and 7% in the wholesale price of wheat on domestic supply, demand and farm level and wholesale prices, and estimating the producer and consumer surplus. The estimated equations are:

- Estimated supply equation for Pakistan wheat (QSW):

$$\text{Log (QSW)} = \underset{(6.066)}{7.796} + \underset{(1.774)}{0.210}*\text{Log (PFW)} + \underset{(0.791)}{0.012}*\text{TREND}$$

$R^2 = 0.90$ $E_{sw} = 0.210$ DW = 2.48

Where,
Log (QSW) = Natural log of total production of wheat in Pakistan ('000 tons)
Log (PFW) = Natural log of farm level prices received by wheat growers in Pakistan in Rs/ton
TREND= 1981=1, 1982=2,…….., 1998=18
E_{sw}= Elasticity of supply with respect to farm level price of wheat.

- Estimated domestic demand equation for wheat in Pakistan:

$$\text{Log (PCCW)} = \underset{(3.318)}{2.988} - \underset{(-1.827)}{0.104}*\text{Log (PWW)} + \underset{(3.322)}{0.323}*\text{Log (PCI)} - \underset{(-2.437)}{0.026}*\text{TREND}$$

$R^2 = 0.82$ $E_{dw} = -0.11$ DW=1.86

Where,
Log (PCCW) = Natural log of per capita consumption of wheat (kg)
QD_w = Total consumption of wheat (PCCW * Population in '000 tons)

Log (PWW) = Natural log of wholesale price of wheat in Lahore, Pakistan (Rs/ton)
Log(PCI) = Natural log of per capita income in Pakistan (Rs)
TREND= 1981=1, 1982=2,…….., 1998=18
E_{dw}= Elasticity of demand of wheat with respect to wholesale price of wheat.

Price linkage equations: There are two sets of price linkage equations which represent the relationship between the price of wheat at the farm level and the price of wheat at various market channels.

- Wholesale price of wheat at Lahore versus the world price of wheat:

$$\text{Log (PWW)} = -0.53 + 1.042*\text{Log(PIW)}$$
$$-(0.68) \quad (10.916)$$

$R^2 = 0.88$ $E_{ww} = 1.042$ DW =1.82

Where,
Log (PWW) = Natural log of wholesale prices of wheat at Lahore, Pakistan in (Rs/ton)
Log (PIW) = Natural log of world price of wheat (Rs/ton)
E_{ww} = Elasticity of wholesale price of wheat at Lahore with respect to international price of wheat.

- Price of wheat received by farmers versus the wholesale price of wheat at Lahore:

$$\text{Log (PFW)} = 0.244 + 0.95* \text{Log (PWW)}$$
$$(0.546) \quad (17.194)$$

$R^2 = 0.98$ $E_{fw} = 0.95$ DW= 1.90

Impact on domestic prices of wheat in Pakistan

The elasticity of price transmission of the wholesale price of wheat at the Lahore market with respect to the international price of wheat (c.i.f. Karachi) is 1.042. This means that a 1% increase in the international price of wheat would increase the Lahore wholesale price of wheat by 1.042%. Therefore, the increase in the world prices of wheat by 7% would have caused an increase in the 1997/98 wholesale price of wheat in Pakistan by 7.294%. In addition to this, the wholesale price of wheat will also increase by another 7% due to discontinuation of the wheat subsidy. Therefore, the total increase in the wholesale price of wheat would have been 14.294% due to trade liberalization. Therefore, the wholesale price of wheat during 1997/98 would have increased from Rs 7,401/ton to Rs 8,459/ton.

The impact of the increase in world price of wheat and discontinuation of the subsidy on the issue price on the price received by wheat growers is estimated from the second price linkage equation. It was estimated using the price elasticity of transmission of the wheat price received by farmers with respect to the Lahore wholesale price of wheat, which equals 0.95. The impact is such that the price of wheat received by farmers would have increased by 13.58% in 1997/98 (from Rs 6,125/ton to Rs 6,957/ton).

Impact on the domestic supply of wheat

From the supply equation, the elasticity of supply of wheat with respect to the farm level price of wheat is 0.21. The impact of the 7% increase in the world price of wheat and termination of the wheat subsidy on the issue price by 7% on the price of wheat received by Pakistani farmers is estimated at 13.58% in 1997/98. Therefore, this would cause an increase in the domestic production of wheat by 2.852%, i.e. from 18.69 million tons to 19.22 million tons during 1997/98. This increase in the production of wheat would generate a gain of producers' surplus of Rs 15,770 million.

Impact on domestic demand for wheat in Pakistan

The impact on domestic demand for wheat was estimated from the demand equation. The demand elasticity with respect to the Lahore wholesale price of wheat was -0.104. This means that a 1% increase in the Lahore wholesale price of wheat is estimated to reduce the domestic demand by 0.104%. Therefore, the impact of the increase in the world price of wheat by 7% and the 7% increase in the wholesale price of wheat due to discontinuation of the government subsidy would have caused the per capita demand for wheat to decline by 1.49% (decline from per capita consumption of 130.33 kg to 128.39 kg). Considering the total population of 143.28 million during 1997/98, the domestic demand of wheat is estimated to decline from 18.67 million tons to 18.40 million tons during 1997/98. The increase in the wholesale price of wheat in Pakistan and resultant decrease in quantity demanded would have caused a loss of consumers' surplus of Rs 19,482 million.

It can be concluded from the above analysis that the 7% increase in the international price of wheat due to the UR agreement by the member countries and discontinuation of the subsidy on the issue price of wheat by 7% will have a positive impact on the production of wheat in Pakistan. On the other hand, it will have a negative impact on the consumers. However, the overall impact is a net loss to Pakistan of Rs 3,711 million.

Rice

After wheat, rice is the second most important staple food and it is also one of the major foreign exchange earning sources of Pakistan. In terms of cropped area, rice is the third most important crop after wheat and cotton, occupying around 10% of the total cultivated area and around 19% of the total area under food grains in the country. Also it contributes about 19% in total food grain production and around 15% of the total value added by the major crops in Pakistan. Since 1960/61, the area under rice has more than doubled, increasing at an annual growth rate of 1.6%. The area under rice was only 1.5 million ha in 1970/71 and had increased to 2.32 million ha during 1997/98. During the same period, rice production increased at an annual growth rate of 2.55%. Rice production was only 2.2 million tons in 1970/71 and had increased to 4.34 million tons during 1997/98. During the same time period, however, yields had increased at a rate of less than 1% per annum. Most of the increase in total production of rice came through increase in area and less through increasing yields.

To assess the impact of trade liberalization on rice at the national level in Pakistan, supply, demand and price linkage equations were estimated using standard regression analysis. The study conducted by FAO (1995) on the Impact of the Uruguay Round on Agriculture determined that, in real terms, prices of rice are likely to increase by around 7% in the international market. Using these results, the impacts of trade liberalization on rice supply, demand and prices were analyzed in the case of Pakistan. Under the market access commitment of the WTO member countries, it is assumed that the export prices of Pakistani rice may increase by 7%. To get more reliable estimates, all the equations were also corrected for

autocorrelation. All the equations were used to assess the impact of a 7% increase in the international price of rice on domestic supply, demand and farm level and wholesale prices, and for estimating the producers and consumer surplus. The estimated equations are:

- Estimated supply equation for Pakistan Basmati rice (QSBR):

  Log (QSBR) = 1.034 + 0.259*Log (PFBR(-1))+ 0.555*Log(QSBR(-1))
  (0.965) (2.161) (2.072)

  $R^2 = 0.92$ $E_{sbr} = 0.259$ DW=1.87

  Where,
  Log (QSBR) = Natural log of total production of Basmati rice in Pakistan ('000 tons)
  Log (PFBR) = Natural log of farm level prices received by Basmati paddy growers (Rs/ton)
  E_{sbr} = The elasticity of supply with respect to farm level price of Basmati paddy.

- Estimated domestic demand equation for Basmati rice in Pakistan:

  Log (QDBR) = 9.716 – 0.397*Log (PWBR) + 0.048*TREND
  (2.528) (-1.87) (1.45)

  $R^2 =0.57$ $E_{dbr} = 0.397$ DW=1.87

  Where,
  Log (QDBR) = Natural log of total consumption of Basmati rice ('000 tons)
  Log (PWBR) = Natural log of wholesale price of Basmati rice in Lahore, Pakistan (Rs/ton)
  E_{dbr} = Elasticity of demand of rice with respect wholesale price of Basmati rice in Rs/ton.

  Price linkage equations: There are two sets of price linkage equations which represent the relationship between the price of paddy at the farm level and the price of milled rice at various market channels.

- Wholesale price of milled Basmati rice at Lahore versus export price of Pakistan Basmati rice in Rs/ton:

  Log (PWBR) = -1.369 + 1.109*Log(PEBR)
  (-0.709) (5.365)

  R2 = 0.64 $E_{wbr} = 1.109$ DW=1.54
  Where,
  Log (PWBR) = Natural log of wholesale price of milled Basmati rice at Lahore (Rs/ton)
  Log (PEBR) = Natural log of export price of Basmati rice of Pakistan in Rs/ton
  E_{wbr} = Elasticity of the wholesale price of Basmati rice at Lahore with respect to the export price of Pakistan Basmati rice.

- Price of Basmati paddy received by farmers versus wholesale price of Basmati rice at Lahore:

  Log (PFBR) = -1.467 + 1.074*Log (PWBR)
  (-2.370) (15.615)

  $R^2 = 0.94$ $E_{fbr} = 1.074$ DW=2.10

- Estimated supply equation for non-Basmati rice (QSNBR):

  Log (QSNBR) = 4.713+0.428*Log (PFNBR)-0.026*TREND
  (4.527) (2.863) (-2.158)

  $R^2 = 0.61$ $E_{sbr} = 0.428$ DW=2.01

  Where,
  Log (QSNBR) = Natural log of total production of non-Basmati rice in Pakistan ('000 tons)
  Log (PFNBR) = Natural log of farm level prices received by Non-Basmati paddy growers (Rs/ton)
  TREND= 1981=1, 1982=2,…….., 1998=18
  E_{snbr} = The elasticity of supply with respect to farm level price of Non-Basmati paddy.

- Estimated domestic demand equation for non-Basmati rice in Pakistan:

  Log (QDNBR) = 7.403 – 0.121*Log (PWNBR) – 0.11*TREND
  (2.05) (-1.04) (1.26)

  R2 =0.56 $E_{dnbr} = -0.121$ DW=2.96

  Where,
  Log (QDNBR) = Natural log of total consumption of non-Basmati rice ('000 tons)
  Log (PWNBR) = Natural log of wholesale price of non-Basmati rice in Lahore, Pakistan (Rs/ton)
  E_{dnbr} = Elasticity of demand of rice with respect wholesale price of non-Basmati rice in Rs/ton.

  Price Linkage Equations: There are two sets of price linkage equations which represent the relationship between price of paddy at farm level and price of milled rice at various market channels.

- Wholesale price of milled Non-Basmati rice at Lahore versus export price of Pakistan Non-Basmati rice in Rs/ton:

  Log (PWNBR) = -1.108 + 1.127*Log (PENBR)
  (-1.41) (12.33)

$R^2 = 0.91$ $E_{wnbr} = 1.127$ DW=1.76

Where,
Log (PWNBR) = Natural log of wholesale prices of milled non-Basmati rice at Lahore, Pakistan in Rs/ton
Log (PENBR) = Natural log of export price of non-Basmati rice of Pakistan in Rs/ton
E_{nbr} = Elasticity of wholesale price of non-Basmati rice at Lahore with respect to export price of Pakistan non-Basmati rice.

- Price of non-Basmati paddy received by farmers versus wholesale price of non-Basmati rice at Lahore:

Log (PFNBR) = 0.275 + 0.888* Log (PWNBR)
(0.88) (23.62)

$R^2 = 0.97$ $E_{fnbr} = 0.89$ DW=1.98

Impact on domestic prices of Basmati and non-Basmati rice in Pakistan

The elasticity of price transmission of the wholesale price of Basmati rice at Lahore market with respect to the Pakistan export price of Basmati rice is 1.109. This means that a 1% increase in the Pakistan export price of Basmati rice would increase the Lahore wholesale price of Basmati rice by 1.109%. Therefore, the increase in export price of Basmati rice by 7% causes an increase in the 1997/98 wholesale price of Basmati rice of 7.763% (from Rs 17,417.75/ton to Rs 18,746.72/ton).

The impact of the increase in the world price of rice on the price received by farmers of Basmati rice is estimated by using the price elasticity of transmission of the Basmati paddy price received by farmers with respect to the Lahore wholesale price of Basmati rice, which equals 1.074. The impact is such that the price of Basmati paddy received by farmers would have increased in 1997/98 by 8.377% (from Rs 9,375/ton to Rs 10,143.28/ton).

The elasticity of price transmission of the wholesale price of non-Basmati rice at the Lahore market with respect to the Pakistan export price of non-Basmati rice is 1.27. This means that a 1% increase in the Pakistan export price of non-Basmati rice would increase the Lahore wholesale price of non-Basmati rice by 1.127%. Therefore, the increase in the export price of non-Basmati rice by 7% would cause an increase in the 1997/98 wholesale price of non-Basmati rice by 7.889% (from Rs 9,829/ton to Rs 10,604.41/ton).

The impact of the increase in world price of rice on the price received by farmers of non-Basmati rice is estimated by using the price elasticity of transmission of the non-Basmati paddy price received by farmers with respect to the Lahore wholesale price of non-Basmati rice which equals 0.89. The impact is such that the price of non-Basmati paddy received by farmers would have increased in 1997/98 by 7.02% (from Rs 4,375/ton to Rs 4,682.13/ton).

Impact on the domestic supply of Basmati and non-Basmati rice

The elasticity of supply of Basmati rice with respect to the farm level price of Basmati rice is 0.259. The impact of the 7% increase in the world price of rice on the price of Basmati paddy received by Pakistani farmers is estimated at 8.195%. Therefore, this would cause an increase in the domestic production of Basmati rice by 2.123%, i.e. from 2,370 thousand tons

(1,539 thousand tons of rice * 1.54) to 2,420.37 thousand tons (1,571.67 thousand tons of rice * 1.54). This increase in the production of Basmati paddy rice would generate a gain of producers' surplus of Rs 1,872 million.

The elasticity of supply of non-Basmati rice with respect to the farm level price of non-Basmati rice is 0.428. The impact of the 7% increase in the world price of rice on the price of non-Basmati paddy received by Pakistani farmers is estimated at 7.02%. Therefore, this would cause an increase in the domestic production of paddy non-Basmati rice by 3.005%, i.e. from 4,310.46 thousand tons (2,799 thousand tons of rice * 1.54) to 4,439.99 thousand tons (2,883 thousand tons of rice * 1.54). This increase in the production of non-Basmati paddy rice would generate a gain of producers' surplus of Rs 3,393 million.

Therefore, on the whole, the 7% increase in the world price of rice would have increased the total production of rice (both Basmati and non-Basmati) from 4.338 million tons to 4.455 million tons (2.692% increase) during 1997/98. This increase in the total production of rice would have generated a gain of producers' surplus of Rs 5,264.96 million in Pakistan during 1997/98.

Impact on domestic demand for rice in Pakistan

The demand elasticity of Basmati rice with respect to Lahore Basmati rice was -0.378. This means that a 1% increase in the wholesale price of Basmati rice is estimated to reduce the domestic demand by 0.397%. Therefore the impact of the 7% increase in the world price of rice on the wholesale price of rice by 7.763% would have caused domestic demand for Basmati rice to decline by 3.082% (decline in total Basmati rice consumption of 894.28 tons to 866.74 thousand tons) during 1997/98. The increase in the wholesale price of Basmati rice in Pakistan and resulting decrease in quantity demanded would have caused a loss of consumer surplus of Rs 1,190.54 million.

The demand elasticity of non-Basmati rice with respect to wholesale price was 0.121 which means that a 1% increase in the wholesale price is estimated to decrease the domestic demand by 0.121%. Therefore the impact of the 7% increase in the international price of rice on the wholesale price of non-Basmati rice in Pakistan (increase by 7.889%) would have caused the domestic demand of non-Basmati to decline by 0.955% (decreased total consumption of non-Basmati rice from 1,090.65 thousand tons to 1,080.23 thousand tons) during 1997-98. This increase in the wholesale price of non-Basmati rice and resulting decrease in quantity demanded would have caused a loss of consumer surplus of Rs 841.66 million.

It can be concluded from the above analysis that the 7% increase in the international price of rice due to the UR agreement by the member countries will have a positive impact on the production of both Basmati and non-Basmati rice in Pakistan. On the other hand, it will cause a negative impact on consumers. However, the overall impact is a net gain of Rs 3,233.76 million to Pakistan from both Basmati and non-Basmati rice.

Maize

After wheat and rice, maize is the third most important cereal crop in Pakistan. Maize occupies around 4% of the total cropped area and 7% of the total area under food crops. It accounts for 3.5% of the value of agricultural output in Pakistan. The area under maize increased at a rate of 1.14% per annum from 1970/71 to 1997/98. Similarly, maize production grew at an annual rate of 2.1% during the same period. However, maize yields are very low averaging only 1.3 tons/ha from 1970/71 to 1997/98. The national average maize yield increased from 1,122 kg/ha in 1970/71 to 1,440 kg/ha during 1997/98.

To assess the impact of trade liberalization on maize at the national level in Pakistan, supply, demand and price linkage equations were estimated using standard regression analysis. To get more reliable estimates, all the equations were also corrected for autocorrelation. The FAO study (1995) determined that, in real terms, prices of maize are likely to increase by 4% in the international market. The impacts of trade liberalization on maize supply, demand and prices were analyzed in the case of Pakistan, assuming prices of maize will increase by 4% in the international market. All the equations were used to assess the impact of a 4% increase in the international price of maize on domestic supply, demand and farm level and wholesale prices, and for estimating the producers' and consumers' surplus. The estimated equations are:

- Estimated supply equation for Pakistan maize (QSM)

$$\text{Log (QSM)} = \underset{(1.69)}{1.918} + \underset{(1.178)}{0.065}*\text{Log (PFM(-1))} + \underset{(3.025)}{0.654}*\text{Log(QSM(-1))}$$

$R2 = 0.86$ $E_{sm} = 0.065$ DW=1.85

Where,
Log (QSM) = Natural log of total production of maize in Pakistan ('000 tons)
Log (PFM) = Natural log of farm level prices received by maize growers (Rs/ton)
E_{sm} = The elasticity of supply with respect to farm level price of maize.

- Estimated domestic demand equation for maize in Pakistan:

$$\text{Log (PCCM)} = \underset{(4.307)}{3.311} - \underset{(-1.47)}{0.150} *\text{Log (PWM)} - \underset{(-1.024)}{0.009}*\text{TREND}$$

$R^2 = 0.87$ $E_{dm} = -0.15$ DW=1.72

Where,
Log (PCCM) = Natural log of per capita consumption of maize (kg)
QDM= Total consumption of maize in '000 tons (PCCM * Population)
Log (PWM) = Natural log of wholesale price of maize in Lahore, Pakistan (Rs/ton)
E_{dm}= Elasticity of demand of maize with respect wholesale price of maize.

Price linkage equations: There are two sets of price linkage equations which represent the relationship between price of maize at farm level and price of maize at various market channels.

- Wholesale price of maize at Lahore versus world price of maize in Rs/ton:

$$\text{Log (PWM)} = \underset{(0.637)}{0.418} + \underset{(11.928)}{1.004}*\text{Log (PIM)}$$

$R2 = 0.90$ $E_{wm} = 1.0054$ DW = 2.05

Where,

Log (PWM) = Natural log of the wholesale prices of maize at Lahore, Pakistan in Rs/ton
Log (PIM) = Natural log of the world price of maize in Rs/ton
E_{wm} = Elasticity of the wholesale price of maize at Lahore with respect to the international price of maize.

- Price of maize received by farmers versus the wholesale price of maize at Lahore:

$$\text{Log (PFM)} = -0.105 + 1.002 * \text{Log(PWM)}$$
$$(-1.50) \quad (4.24)$$

$R2 = 0.99$ $E_{fm} = 1.002$ DW=1.91

Impact on domestic prices of maize in Pakistan

The elasticity of price transmission of the wholesale price of maize at the Lahore market with respect to the international price of maize is 1.004. This means that a 1% increase in the international price of maize would increase the Lahore wholesale price of maize by 1.004%. Therefore the increase in the world price of maize by 4% would have caused an increase in the 1997/98 wholesale price of maize in Pakistan by 4.02%. Therefore, the wholesale price of maize during 1997/98 would have increased from Rs 8,538.25/ton to Rs 9,224.73/ton during 1997/98.

The impact of the increase in the world price of maize on the price received by maize growers is estimated by using the price elasticity of transmission of the maize price received by farmers with respect to the Lahore wholesale price of maize, which equals 1.002. The impact is such that the price of maize received by farmers would have increased in 1997/98 by 4.03% (from Rs 7,684.43/ton to Rs 7,994.11/ton).

Impact on the domestic supply of maize

The elasticity of the supply of maize with respect to the farm level price of maize is 0.065. The impact of the 4% increase in the world price of maize on the price of maize received by Pakistani farmers is estimated at 4.03%. Therefore, this would cause an increase in the domestic production of maize by 0.262%, i.e. from 1.251 million tons to 1.254 million tons during 1997/98. This increase in the production of maize would generate a gain of producers' surplus of Rs 387.87 million. Domestic prices of maize are already high in Pakistan compared to international prices. Therefore, the maize producers would not gain much from trade liberalization.

Impact on domestic demand for maize in Pakistan

The impact on domestic demand for maize was estimated. The demand elasticity with respect to the Lahore wholesale price of maize was -0.15. This means that a 1% increase in the Lahore wholesale price of maize is estimated to decrease domestic demand by 0.15%. Therefore, the increase in the world price of maize by 4% would have caused the domestic demand for maize to decline by 0.603%. The domestic demand is estimated to decline from 1.323 million tons to 1.315 million tons during 1997/98. The increase in wholesale price of maize in Pakistan and resulting decrease in quantity demanded would have caused a loss of consumers' surplus of Rs 452.37 million.

It can be concluded from the above analysis that the 4% increase in the international prices of maize due to the UR agreement by the member countries will have a positive impact

on the production of maize in Pakistan. On the other hand, it will have a negative impact on the consumers. However, the overall impact is a loss to Pakistan of Rs 64.86 million during 1997/98.

Effects of trade liberalization at the farm level: a case study

Impact of trade liberalization on Basmati and non-Basmati rice at the farm level

The impact of trade liberalization on Basmati and non-Basmati rice producers was analyzed using partial budgets of Basmati and non-Basmati rice without trade liberalization (during 1993/94) and with trade liberalization (during 1997/98) at the farm level in the rice areas of Punjab (Tables 4 and 5). In Pakistan there are no fertilizer and pesticide/insecticide subsidies. The impact of trade liberalization was studied by looking at the changes in input and out prices that are considerably increased from 1993/94 to 1997/98. During this period, the minimum support prices of both Basmati and non-Basmati rice have significantly increased, and now are close to international prices. Presently, trade of rice in Pakistan is completely under the private sector, although it used to be under the public sector.

Expenditures on fertilizer, irrigation, and land preparation almost doubled between 1993/94 and 1997/98 after trade liberalization. In the case of Basmati rice, expenditure on fertilizer increased by Rs 1,102.81/ha, and the same expenditure on non-Basmati increased by Rs 1,781/ha. Total cost of production of Basmati rice increased from Rs 9,439/ha to Rs 17,383/ha, and in the case of non-Basmati rice, the cost of production/ha increased from Rs 8,196 to Rs 15,523 after trade liberalization. Gross costs/ton in the case of Basmati rice increased from Rs 4,281/ha to Rs 7,884/ha, and gross costs/ton of non-Basmati rice increased from Rs 2,475 to Rs 4,687. Net returns per hectare have increased from Rs 4,198 to Rs 4,828 for Basmati rice. However, in the case of non-Basmati rice, net returns per hectare decreased from Rs 2,386 to only Rs 41 which is mainly due to low the prices of non-Basmati rice. These results show the positive impact of trade liberalization on rice production in Punjab and are similar to the findings of impacts of trade liberalization on rice production at the national level given in the previous section.

Table 4 Average farmer's cost of production and returns of Basmati paddy rice crop in Punjab, Pakistan.

Operation/Input/Output	Without Trade Lib.* (Rs/ha)	With Trade Lib ** (Rs/ha)	Difference (Rs/ha)
1. Land preparation	1,330.29	2,099.50	769.21
2. Nursery	944.31	1,552.15	607.84
3. Weedicides/Plant protection	364.70	1,026.70	662.01
4. Farmyard manure	89.83	123.50	33.67
5. Fertilizer	1,019.47	2,122.27	1,102.81
6. Irrigation	1,766.17	3,823.91	2,057.73
7. Labour	631.31	1,283.58	652.28
8. Interest on investment @14% per year for 6 months on items 1-7	430.23	842.21	411.99
9. Harvesting, threshing & winnowing	880.78	1,528.21	647.44
10. Management charges for 6 months	252.68	387.79	135.11
11. Land rent for 6 months	1,729.00	2,593.50	864.50
12. Gross cost (add items 1-11)	9,438.76	17,383.33	7,944.57
13. Yield per ha (tons)	2.21	2.21	
14. Farmgate price per ton	6,000.00	9,625.00	3,625.00
15. Returns (multiply items 13 &14)	13,230.00	21,223.13	7,993.13
16. Value of straw	406.66	988.00	581.34
17. Gross returns (add items 15 &16)	13,636.66	22,211.13	8,574.46
18. Net return per ha (subtract item 12 from 17)	4,197.90	4,827.79	629.89
19. Gross cost per ton (divide item 17 by 13)	4,280.62	7,883.60	3,602.98

20. Net return per ton (divide item 18 by 13)	1,903.81	4,827.79	2,923.98

* Cost of production and net returns of 1993/94 Basmati paddy rice crop per hectare, without the impact of trade liberalization at the farm level.

** Cost of production and net returns of 1997/98 Basmati paddy rice crop per hectare, with the impact of trade liberalization at the farm level.

Source: Agriculture Prices Commission, Islamabad, Pakistan.

Table 5 Average farmer's cost of production and returns of non-Basmati paddy crop in Punjab, Pakistan.

Operation/Input/Output	Without Trade Lib.* (Rs/ha)	With Trade Lib ** (Rs/ha)	Difference (Rs/ha)
1. Land preparation	1,142.50	1,914.25	771.75
2. Nursery	755.41	1,533.03	757.62
3. Weedicides/Plant protection	404.78	1,269.85	865.07
4. Farmyard manure	101.76	121.03	19.27
5. Fertilizer	1,053.85	2,834.74	1,780.89
6. Irrigation	1,404.59	2,018.81	614.21
7. Labour	633.09	1,312.56	679.47
8. Interest on investment @14% per year for 6 months on items 1-7	372.33	770.30	397.97
9. Harvesting, threshing & winnowing	819.87	1,384.53	564.67
10. Management charges for 6 months	252.68	387.79	135.11
11. Land rent for 6 months	1,235.00	1,976.00	741.00
12. Gross cost (add items 1-11)	8,195.86	15,522.89	7,327.04
13. Yield per ha (tons)	3.31	3.31	0.00
14. Farmgate price per ton	3,125.00	4,550.00	1,425.00
15. Returns (multiply items 13 &14)	10,350.00	15,069.60	4,719.60
16. Value of straw	231.86	494.00	262.14
17. Gross returns (add items 15 &16)	10,581.86	15,563.60	4,981.74
18. Net return per ha (subtract item 12 from 17)	2,386.00	40.71	-2,345.30
19. Gross cost per ton (divide item 17 by 13)	2,474.59	4,686.86	2,212.27
20. Net return per ton (divide item 18 by 13)	720.41	12.29	-708.12

* Cost of production and net returns of 1993/94 non-Basmati paddy crop per hectare, without the trade liberalization impact.

** Cost of production and net returns of 1997/98 non-Basmati paddy crop per hectare, with the trade liberalization impact.

Source: Agriculture Prices Commission, Islamabad, Pakistan.

Impact of trade liberalization on wheat at the farm level

The impact of trade liberalization on wheat producers was analyzed using the partial budget of the wheat crop without (1993/94 crop) and with (1997/98 crop) trade liberalization at the farm level in the rice areas of Punjab (Table 6). In Pakistan there is no subsidy on fertilizer and other inputs including insecticide/pesticide. The impact of trade liberalization was determined by looking at the changes in input and wheat output prices, which were considerably increased from 1993/94 to 1997/98. During this period, the minimum support prices of wheat considerably increased and approached international prices during 1997/98 (although they used to be significantly lower than the world prices). Presently, the private sector is also allowed to import wheat, which used to be completely under government control. Expenditure on fertilizer, irrigation, and land preparation significantly increased from 1993/94 (before trade liberalization) to 1997/98 (after trade liberalization). For example, expenditure on fertilizer increased from Rs 1,360/ha to Rs 2,026/ha during this time. Total cost of production of wheat increased from Rs 9,375/ha to Rs 14,889/ha after liberalization. The gross cost per ton for wheat increased from Rs 4,348 to Rs 6,906 after trade liberalization. However, net returns from wheat cultivation were negative during 1997/98 (with trade liberalization) although they were positive during 1993/94 (without trade liberalization). These results show that prices of wheat output did not increase in proportion with increase in input prices during this period. In

the present price structure, wheat cultivation is not a profitable enterprise compared to other competing crops such as sunflower, canola, etc.

Table 6 Average farmer's cost of production and returns of wheat crop in Punjab, Pakistan.

Operation/Input/Output	Without Trade Lib* (Rs/ha)	With Trade Lib** (Rs/ha)	Difference (Rs/ha)
1. Land preparation	862.05	1,416.99	554.93
2. Seeds & planting	919.43	1,418.32	498.89
3. Interculture/weeding/weedicides	48.44	101.81	53.38
4. Irrigation	749.55	1,299.94	550.39
5. Farmyard manure	57.90	74.10	16.20
6. Fertilizer	1,359.69	2,026.17	666.48
7. Labour	299.64	413.28	113.64
8. Interest on investment @14% per year for 6 months on items 1-7	300.77	472.54	171.77
9. Harvesting & threshing	2,232.56	3,572.71	1,340.15
11. Land rent for 6 months	2,223.00	3,705.00	1,482.00
10. Management charges for 6 months	321.59	387.79	66.20
12. Gross cost (add items 1-11)	9,374.61	14,888.65	5,514.04
13. Yield per ha (tons)	2.16	2.16	
14. Farmgate price per ton (minimum support price)	4,000.00	6,000.00	
15. Returns (multiply items 13 &14)	8,624.00	12,936.00	4,312.00
16. Value of wheat straw	1,510.00	1,729.00	219.00
17. Gross returns (add items 15 &16)	10,134.00	14,665.00	4,531.00
18. Net return per ha (subtract item 12 from 17)	759.39	-223.65	-983.04
19. Gross cost per ton (divide item 17 by 13)	4,348.15	6,905.68	2,557.53
20. Net return per ton (divide item 18 by 13)	352.22	-103.73	-455.95

* Cost of production and net returns of wheat during 1993/94, without trade liberalization.
** Cost of production and net returns of wheat during 1997/98 with trade liberalization.
Source: Agricultural Prices Commission, Islamabad, Pakistan.

Impact of trade liberalization on maize at the farm level

Using the average maize yield of 2.57 tons/ha during 1997/98, the cost of production, gross returns and net returns/ha were estimated for the 1993/94 and 1997/98 maize crops, and the impact of trade liberalization on maize cultivation was analyzed (Table 7). During this period, the farm level price of maize increased considerable, and now the private sector is also allowed to import maize for commercial purposes. The total cost of production of maize increased from Rs 10,595/ha to Rs 15,883/ha after trade liberalization. The gross cost per ton of maize increased from Rs 4,281 to Rs 7,884 during this time period. Also net returns from maize cultivation increased from Rs 4,198/ha to Rs 4,828/ha after trade liberalization. These results show a positive impact of trade liberalization on the income of maize growers, which matches with the welfare analysis results at the national level (positive producers' surplus) presented previously.

Table 7 Average farmer's cost of production and returns of maize crop in Punjab, Pakistan.

Operation/Input/Output	Without Trade Lib.* (Rs/ha)	With Trade Lib.** (Rs/ha)	Difference (Rs/ha)
1. Land preparation	890.00	1,012.70	122.70
2. Seeds & planting	309.00	753.35	444.35
3. Interculture/weeding/weedicides	524.00	1,432.60	908.60
4. Irrigation	950.00	1,506.70	556.70
5. Farmyard manure	450.00	666.90	216.90
6. Fertilizer	1,240.00	2,148.90	908.90
7. Labour	640.00	889.20	249.20
8. Interest on investment @14% per year for 6 months on items 1-7	337.70	588.72	251.02
9. Harvesting, dehusking & shelling	1,950.00	2,791.10	841.10
11. Land rent for 6 months	2,964.00	3,705.00	741.00
10. Management charges for 6 months	340.00	387.79	47.79
12. Gross cost (add items 1-11)	10,594.70	15,882.96	5,288.26
13. Yield per ha (tons)	2.57	2.57	0.00
14. Farmgate price per ton	4,875.00	7,675.00	2,800.00
15. Returns (multiply items 13 &14)	12,522.90	19,715.54	7,192.64
16. Value of maize stalks	740.00	988.00	248.00
17. Gross returns (add items 15 &16)	13,262.90	20,703.54	7,440.64
18. Net return per ha (subtract item 12 from 15)	2,668.20	4,820.58	2,152.38
19. Gross cost per ton (divide item 12 by 13)	4,122.45	6,180.14	2,057.69
20. Net return per ton (divide item 18 by 13)	1,038.69	1,876.59	837.89

* Cost of production and returns for 1993/94 maize crop per hectare without the impact of trade liberalization.

** Cost of production and returns for 1997/98 maize crop per hectare with he impact of trade liberalization at the farm level.

Source: Agricultural Prices Commission, Islamabad, Pakistan.

Policy implications

Presently, Pakistan is in the process of implementing the UR agreements on agriculture, which is a very complex and comprehensive undertaking and its impacts cannot be easily quantified mainly due to uncertainty in the agricultural sector. Therefore, extra precautions should be taken in the interpretation these impacts on the agricultural sector. With the existing economic and political structure in Pakistan, it is expected that the country will face considerable policy challenges in the course of implementation of the UR agreement, including tariff reduction. Various other policy adjustments would be required to fulfil obligations under the WTO, for example, eliminating of the wheat import subsidy, fixing support prices below world prices, opening up the market for food commodities, etc.

In the agricultural sector, most producers, exporters, and policy-makers are presently not well aware about the Uruguay Round trade agreement on agriculture. There is an urgent need to pursue public awareness programs on the impact of trade liberalization on agriculture, including trade policy developments, priorities, and strategies of the major trading partners of Pakistan.

To further expand the export of agricultural commodities, Pakistan may have to adopt measures and programs that would ensure that its export products compete successfully with those exported by other LDCs, particularly producers of the same commodities in Asia.

From global trade liberalization in agriculture, Pakistan is interested in expanding its world market share mainly for its exportable agricultural commodities such as rice. Also, Pakistan has to liberalize its agricultural imports, which means domestic producers have to face competition from international agriculture, which enjoys access to inexpensive capital, well-developed infrastructure and the latest technology. In this situation, there is a need to considerably increase the productivity and efficiency of all agricultural traded commodities.

The productivity of almost all traded goods is very low compared to their potential. Therefore, efforts must be made through extension to promote improved cultural and intensive management practices to increase the existing productivity levels. Also, present price policies should be revised and commodity prices should be market-oriented, and government should slowly phase out all forms of price support policies and control on output markets in the country.

It is expected that domestic prices of wheat, the main staple food in Pakistan, will increase considerably and the country will have to spend a huge amount of foreign exchange on its imports. In the case of wheat, the best strategy would be to achieve self-sufficiency by considerably increasing the productivity of the local wheat crop, which is far below the potential yield level.

Internal liberalization is the key to fully benefiting from external trade liberalization in agriculture. There is a need to remove distortions in the agricultural sector in Pakistan, such as excessive unnecessary government control, restrictions on produce movement and private sector participation in agriculture, fixing minimum support prices, etc.

Due to lower (or negative) net returns from planting food grains, including wheat, the cropping pattern is getting diversified with a shifting away from food grains towards high value crops or export-oriented crops. This is a very serious issue, since with the existing population growth of around 3%, demand for food commodities is increasing at a faster rate. In such a situation there is a need to carefully design policies on key issues, such as whether or not to shift the food grain area towards high value crops, although earnings from the high value crops or crops with export potential could be used to import food grains to meet domestic requirements.

Trade-related physical infrastructure in Pakistan needs considerable improvement to fulfil the growing needs of international trade. Facilities such as the transport network, equipment for quality control, bulk storage and handling facilities, railway sheds, etc., should be improved through increased private investment to develop the physical infrastructure in the country.

References and bibliography

Ahmed, V.; and Amjad, R. 1984. The Management of Pakistan's Economy. UGC Monograph Series in Economics, Oxford University Press, Karachi.

Akhtar, M.R. 1998. Impact of Trade Liberalization on Agriculture in Pakistan: Institutional and Structural Issues. Working Paper No. 33, CGPRT Centre, Bogor, Indonesia.

Akhtar, M.R. 1997. Marketing of agricultural food commodities in Pakistan: issues and policies. Progressive Farming J. 16(5):52-60.

Akhtar, M.R. 1997. Market Prospects for Upland Crops in Pakistan. Working Paper No. 23, CGPRT Centre, Bogor, Indonesia.

Akhtar, M.R. 1997. Market prospects for upland crops in Pakistan. *In* Proceedings of a Workshop on Market Prospects for Upland Crops in Asia, Bogor, Indonesia, February 25-28, Working Paper No.34, CGPRT Centre, Bogor, Indonesia.

Akhtar, M.R.; and Khan, N.A. 1996. Sunflower Seed Demand Forecast in various agro-ecological zones of Pakistan: Farmers' Perception and Econometric Analysis. PODB/AERU Staff Paper, NARC, Islamabad.

Akhtar, M.R.; Qayyum, A.; and Amir, P. 1984. A Preliminary Analysis of Resource Use for Rice in Daska, Sialkot. Staff Paper, Pakistan Agricultural Research Council, Islamabad Pakistan.

Akhtar, M.R.; Byerlee, D.; Heisey, P.; and Steven, J. 1986. Maize in the irrigated farming system of the Punjab: An exploratory survey. PARC/CIMMYT Staff Paper No. 86-14, CIMMYT, Islamabad, Pakistan.

Akhtar, M.R.; Byerlee, D.; and Tetlay, K. 1992. Developing appropriate cropping patterns for the cotton-wheat system of the Southern Punjab: Plant breeding and policy perspective. *In* Derek Byerlee and Tariq Hussain (eds.), Farming Systems of Pakistan: Diagnosing Priorities for Agriculture and Research, Vanguard Publishers, Lahore, Pakistan.

Ahmad, Zulfikar. 1997. Modelling the impact of agricultural policy at the farm level in the Punjab Pakistan. Unpublished Ph.D thesis. The University of Nottingham, UK.

Azhar, R.A. 1995. The Uruguay Round and Pakistan's exports. *In* The Implications of the Uruguay Round for Pakistan. Islamabad: Pakistan Institute of Development Economics

Byerlee, D.; Aheikh, A.D.; Aslam, M.; and Hobbs, P.R. 1984. Wheat in the Rice-based Farming System of the Punjab: Implications for Research and Extension. National Agricultural Research Centre, Islamabad, Pakistan.

Chaudhry, M.G. 1995. Economic liberalization of Pakistan's economy: trends and repercussions. Contemporary South Asia 4(2):187-192.

Diakosavvas, D.; and Kirkpatrick, C. 1990. The Effects of Trade and Exchange Rate Policies on Production Incentives in Agriculture. Economic And Social Development Paper 96, Food and Agriculture Organization of the United Nations, Rome, Italy.

DeRosa, D. A. 1995. Regional Trading Arrangements Among Developing Countries: The ASEAN Example. Research Report 103, International Food Policy Research Institute, Washington, D. C.

Dorosh, P.; and Vardes, A. 1990. Effects of Exchange Rate and Trade Policies on Agriculture in Pakistan. Research Report 84, International Food Policy Research Institute, Washington D.C., USA.

Faruqee, R. 1995. Structural and Policy Reforms for Agricultural Growth: The Case of Pakistan. Agricultural and Natural Resource Division, South Asia Department 1, The World Bank.

FAO. 1995. Impact of the Uruguay Round on Agriculture. Food and Agriculture Organization of the United Nations, Room, Italy.

FAO. 1995. Medium-Term Prospects for Agricultural Commodities: Projections to the Year 2000. FAO Economic And Social Development Paper 120, Food and Agriculture Organization of the United Nations Rome. 1993.

Goldin, I.; Knudsen, O.; and van der Mensbrugghe, D. Trade Liberalization: Global Economic Implications. Washington, D.C. and Paris: The World Bank and the OECD Development Centre, 1995.

Goldin, I.; and van der Mensbrugghe, D. The Uruguay Round: an assessment of economywide and agricultural reforms. Paper read at a World Bank conference on the Uruguay Round and Developing Economies, January 26-27, 1995. Washington, D.C.: The World Bank.

Ingco, Merlina; and Alan Winters, L. 1995. Pakistan and Uruguay Round: Impact and Opportunities, A Quantitative Assessment. Background paper for Pakistan 2010. Washington, D.C.: The World Bank.

Khan, A. H. 1994. The impact of the Uruguay Round on world economy. The Pakistan Development Review 33:4, Part II.

Knudsen, Odin; and Nash, John. Redefining the Role of Government in Agriculture for the 1990s. World Bank Discussion Paper 105, Washington, D.C.

Knudsen, O.; and Ian, D. 1990. Agricultural Trade Liberalization Implications for Developing countries. Organization for Economic Co-Operation and Development, The World Bank.

Koester, U. 1985. Agricultural Market Intervention and International Trade. European Review of Agricultural Economics Vol.12-1/2, International Food Policy Research Institute, Washington, D. C.

Krueger, A.O. 1978. Foreign Trade Regimes and Economic Development: Liberalization Attempts and Consequences. National Bureau of Economic Research.

Krueger, A.O. 1985. Import Substitution verus Export Promotion. Finance and Development, 22(2):20-23.

Lewis, S.R. 1970. Pakistan Industrialization and Trade Policies. Oxford University Press, 1970.

Low, P. 1995. Impact of the Uruguay Round on Asia, trade in services and trade related investment measures. Paper read at Conference on Emerging Global Trading Environment and Developing Asia, Asian Development Bank, Manila, Philippines, 29-30 May.

Low, P.; and Yeats, A. 1994. Non-tariff Measures and Developing Countries: Has the Uruguay Round Leveled the Playing Field? Policy Research Working Paper 1353. The World Bank, Washington D.C.

Naqvi, S.N.H.; and Mahmood, Z. 1994. The Uruguay Round Agreement and its Implications for Developing Countries including Pakistan. PIDE/ESCAP/UNDP National Seminar on Networking of Trade-Related Research Institutions in Asia and Pacific, National Seminar at Bhurban, Pakistan, 8-9 October, 1994.

OECD. 1994. The Benefits of Free Trade: East Asia and Latin America. Trade Policy Issues 3, Paris, OECD.

Qureshi, S.K. 1996. Impact of Uruguay Round Agreement on Pakistan's agriculture sector: a preliminary analysis. Paper read at Regional Seminar on WTO & the Uruguay Round Agreement: Implications for the South Asia Region Agriculture, Nepal, April 22-24, 1996.

Schott, Jeffery J. 1996. WTO 2000: Setting the Course for World Trade, Policy Analyses in International Economics, No. 45, Washington D.C.: Institute for International Economics.

Schott, Jeffery J. assisted by J. Buurman. 1994. The Uruguay Round: An Assessment. Washington D.C.: Institute for International Economics.

Smith, L.D.; and Thomson, A.M. 1991. The Role of Public and Private Agents in the Food and Agricultural Sectors of Developing Countries. FAO Economic and Social Development Paper 105. Food and Agriculture Organization of the United Nations, Rome.

Tangermann S. 1994. An Assessment of the Uruguay Round Agreement on Agriculture. Paper prepared for the Directorate for Food, Agriculture and Fisheries and the Trade Directorate of OECD. Stanford.

Thomas. 1970. Import Licensing and Import Liberalization in Pakistan. *In* Nural Islam (ed) Studies in Commercial Policy and Economic Growth, PIDE, Karachi.

Comments on the Pakistani Country Report

Ikram Saeed[*]

General comments

Scope of the project.

This study on the impact of trade liberalization on selected agricultural commodities in Pakistan is relevant and timely to cope with the emerging needs of the World Trade Organization (WTO). As already mentioned in the project presentation, Pakistan is a signatory of the Uruguay Round Agreement for Agriculture and the non-agricultural sectors of Pakistan's economy. The attempt made by Dr. Akhtar is excellent and a good start for future course of action at the level of researchers, policy-makers, traders/agribusiness communities and farmers.

Methodology

In this project, a simple and static analysis is employed to catch the reasonable affects of trade on selected commodities like rice, wheat and maize. There is wide scope to refine the methodology for realizing the appropriate results from this sort of project.

Results and policy implications

Analysis of the data generated reasonable results to direct future studies and guide follow-up. For example, there is a need to create an awareness between the diversified vested interest groups, including policy-makers/planners, research and development partners, institutional and structural adjustment authorities, and farmers, etc.

Specific comments

Scope of the study is limited to only three crops

- Wheat status: importing with a magnitude of around 2-4 million tons depending upon domestic production.
- Rice status: exporting with a magnitude of about 24 million tons.
- Maize status: producing for domestic consumption with a supply magnitude of 13 million tons, but Pakistan is importing hybrid seed to plant this crop.

The scope of the study may be expanded appropriately stressing the interdependent nature of sub-sectors of the agricultural sector, including socio-economic and land-holding conditions, as a future research agenda.

Methodology

The methodology is perfect as per availability of the data as well as methodological guidelines provided by the CGPRT's coordinating technical consultant.

[*] Pakistan Agricultural Research Council, Islamabad, Pakistan.

In reality, however, the tariffs and pricing of agricultural commodities are dynamic in nature and there is a need to employ a dynamic type of analysis/technique, such as:

- Econometric, particularly general and partial equilibrium modeling, but there is a huge data requirement for this modeling.
- The macro-economic modeling approach may include inter/intra regional and international trade analysis.
- For comprehensive static analysis, an input-output analysis may be employed to incorporate the forward and backward linkages to examine spillover effects on other sectors of the economy. This model may be relevant to generate the desired information for this type of project on employment, output, and income.

Results and policy implications

Although Pakistan has a comparative advantage for commodities such as Basmati rice, wheat, maize, cotton, fruits and vegetables, livestock and fisheries and non-conventional floriculture (i.e. cut flowers), a recent cropping system analysis of total factor productivity depicts that:

- Rice-wheat shows a declining trend of productivity contributions
- Cotton-wheat is positively contributing towards productivity of the system
- Mixed cropping is positively contributing towards productivity of the system

Therefore, care is needed for interpreting the results as already pointed out by the project presenter. Moreover, recommendations need to be designed to upgrade the health of the rice-wheat system to attain sustainable productivity. Problems in this system may be due to less investment being made by the farming community in the rice-wheat system, and partly due to unfavorable input-output returns.

As mentioned by the speaker, Pakistan is a signatory of Uruguay Round of multilateral trade agreement. The tariff and non-tariff measures are:

- Pakistan has already reduced the tariff rates up to 35% or even lower.
- Total aggregate measures of support (AMS): presently Pakistan is moving towards 0% AMS but careful planning is desirable to protect the farmers' interests in profitable agribusiness interventions. The scenario of subsidies in Pakistan is as follows:
  - Fertilizer: no subsidy on domestic products, but a subsidy on imported products, i.e. phospatic fertilizer.
  - Pesticide: no subsidy at all.
  - Irrigation: some subsidies on canal water as well as electric agricultural tubewell irrigation.

With aspect to infrastructural facilities, Pakistan is badly lacking in proper transportation facilities, i.e. road, railway and air. Recently, Pakistan launched a big investment project establishing a free-way (motorway) in the Punjab and has planned to open up NWFP, Sind and Baluchistan provinces.

The electronic media is not accessible to many of the market functionaries to get equal opportunity of marketing information services and marketing intelligence.

Intellectual property rights are not fair to all countries in terms of technology transfer, technology use, especially the LDCs, which are not able to afford compliance due to financial and awareness bottlenecks.

Similarly, sanitary and phytosanitary measures are unfair for the LDCs in general and Pakistan in particular in terms of environment and labour laws, such as:

- Food industries: fisheries products

- Labour problem: child labour in the carpet, football, etc industries. Careful planning is needed to design employment policies to engage unemployed manpower and to launch support programmes for the affected families of child labour.
- Chemicals used for crop production: Pakistani farmers are relatively low users compared to European farmers (DCs).

However, for development of the free trade economy the condition of perfect competition must be met both for DCs and LDCs. Thus the LDCs must be given a special allowance to meet the conditions in terms of equal opportunity to enter with capacity building.

The effects of trade liberalization and its implications are not very much known amongst the users, including policy makers, researchers, farmers, agribusiness commercial companies, exporters/importers and marketing functionaries, and curriculum developers of educational/professional institutes involved in human resource development. Hence, this study addresses the dire need of skills, knowledge and attitude development through dissemination among the user groups via seminars, workshops, publications and training, etc. This workshop should be arranged at different forums like domestic (Pakistan), regional (CGPRT Centre) and international (WTO) levels.

What would happen if price support/protection is withdrawn on the commodities like wheat, rice and maize, which meet the basic food needs of the Pakistani and other dependent populations in terms of food security issues? Similarly, a comprehensive analysis should be carried out in the future research agenda. For the future, careful modeling should be designed to get all potential answers in terms of small vs larger farmers through examining the status of marketable surplus.

Some more suggestions that need attention are (i) employment generation programs carefully launched to alleviate poverty and support national development making use of skilled and unskilled manpower; (ii) diversified trade options for broadening the trade basis; (iii) exchange rate, and trade and financial matters should be dealt with together rather than individually. Thus monetary and financial policies need to be organized as the Government. of Pakistan is already performing by providing autonomy to the State Bank of Pakistan, etc.

Effects of Trade Liberalization on Selected Agricultural Commodities in the Philippines

Minda C. Mangabat[*]

Foreign trade policies and reforms

Past trade policies in the Philippines have been characterized by varying degrees of protection. Quantitative restrictions (QRs), exchange controls and high tariff rates were utilized to protect domestic industries and promote industrialization through import substitution. These policies contributed to distortions in price incentives against the agricultural sector, inhibiting efficient resource allocation and hence, dampening agricultural output. The declining share of the agriculture sector in the country's national output or gross domestic product GDP is partly the result of those policies.

Several attempts towards trade reforms were initiated unilaterally in the country as early as the 1960s, efforts were renewed in the 1980s and intensified towards the mid 1990s as part of the global and regional trends for trade liberalization. In the 1980s, trade reforms were carried through the Tariff Reform Program (TRP) and the Import Liberalization Plan (ILP). The TRP advocated a uniform level of protection among and within sectors of the economy, reduced effective protective rates (EPRs) and reduced tariff rates from 100% to within the range 10 to 50%. The ILP included mostly manufactured goods; it also abolished agriculture export taxes, liberalized fertilizer and wheat imports but temporarily banned maize imports.

The country's efforts towards an open market policy are reinforced by current multilateral and regional trading agreements such as the GATT-UR/WTO, AFTA and APEC. Under the GATT-WTO, the Philippines is committed to market access and sanitary and phytosanitary (SPS) measures. There are no export subsidies in the country and the value of agricultural subsidies is less than the 10% ceiling level for developing countries, hence, the country made no commitments on these areas. Under market access, except for rice the QRs have been replaced with tariffs. The initial tariffs for sensitive agricultural products are mostly 100%, generally above the nominal protective rates under the QRs.

Pattern of agricultural trade

The declining relative importance of the agriculture sector to GDP is manifested in the reduced share of trade in the sector to total trade (Table 1). In the early 1980s total agricultural exports, including processed agricultural products and agro-industrial products, contributed about one-third to the total value of exports. On average, this share declined at an annual compounded rate of 8% until 1997 due to increasing manufactured product and electronics exports. The share of agricultural imports to total imports decreased from 11% in 1980 to 9% from 1996 to 1997.

[*] Bureau of Agricultural Statistics, Department of Agriculture, Quezon City, the Philippines.

Table 1 Total exports and imports and share of agriculture, the Philippines, 1980-1997.

Year	Total Exports	Exports % Share		Total Imports	Imports % Share	
	(US $M, f.o.b.)	Agricultural	Non-Agricultural	(US $M, f.o.b.)	Agricultural	Non-Agricultural
1980	5,751	37.7	62.3	7,727	10.6	89.4
1985	4,589	28.0	72.0	5,111	13.8	86.2
1990	8,186	20.8	79.2	12,206	12.7	87.3
1995	17,447	14.3	85.7	26,538	10.0	90.0
1996	20,543	11.2	88.8	32,427	9.5	90.5
1997	25,228	9.3	90.7	35,934	8.6	91.4

Source: Agricultural Foreign Trade Statistics, various years. Published by the Bureau of Agricultural Statistics based on data from the National Statistics Office.

As a result of the Trade Reform and Import Liberalization Programs, agricultural trade improved beginning in 1988. While agricultural exports increased, the rate of increase in agricultural imports was greater, which gradually eroded the agricultural trade balance. A deficit incurred in 1994 and exacerbated by import liberalization under the GATT-WTO. This situation is also reflected in the decreasing share of agricultural exports to national GDP. In 1997, agricultural exports accounted for almost 3% of national GDP compared to the 7% share in 1980, while the share of agricultural imports to GDP was nearly 4% compared to 2.5% in 1980 (Table 2).

Table 2 GDP, agricultural trade, balance of agricultural trade, and share to GDP, the Philippines, 1980-1997.

Year	Agric. Exports	Agric. Import (US $M, f.o.b.)	Agric. Trade Balance	% Share to National GDP		
				Agric. Exports	Agric. Import	Agric. Trade Balance
1980	2,167	823	+1,344	6.7	2.5	4.1
1985	1,286	707	+579	4.2	2.3	1.9
1990	1,701	1,555	+146	3.8	3.5	0.3
1995	2,499	2,649	-150	3.4	3.6	0.2
1996	2,307	3,096	-789	2.8	3.7	0.9
1997	2,338	3,102	-764	2.8	3.7	0.9

Source: National Statistics Office.

The ratio of agricultural imports to agricultural GDP was on the uptrend from 1980 to 1997 (Table 3), which reflects changes in the import policies of the 1980s and 1990s. When import controls were re-instituted towards the mid-1980s, the share of imports to GDP also decreased; it improved as trade reforms gained momentum towards the late 1980s. This pattern between trade reform and ratio of agricultural import to GDP continued in the 1990s and became more apparent beginning in 1995. The impact of import policy reforms is more indicative in the livestock imports; its share to agricultural GDP in 1980 more than doubled in 1997. Also, the share of foodcrop imports in 1997 was almost twice that in 1980. The share of feedgrain imports increased slightly, since most feedgrains which are vital to the domestic livestock industry are imported and pre-liberalization measures would have already allowed imports in sufficient quantities.

Table 3 Agricultural GDP and agricultural trade, the Philippines, 1980-1997.

Year	Agric. GDP (US $M)	% Share to GDP					
		Agric. Exports	Agri. Imports	Foodcrop Imports	Livestock Imports	Fishery Imports	Feedgrain Imports
1980	7,311	29.6	11.3	3.5	1.7	0.4	1.1
1985	7,054	18.2	10.0	4.2	1.1	0.02	0.7
1990	10,118	16.8	15.4	5.4	2.8	0.5	1.7
1995	15,330	16.3	17.3	5.6	3.6	0.4	1.7
1996	17,546	13.1	17.6	7.2	3.2	0.4	1.1
1997	16,475	14.2	18.8	6.4	3.8	0.4	1.9

Source: National Statistics Coordination Board for GDP and National Statistics Office for trade data.

Institutional and structural aspects

The Philippines is committed to harmonizing its SPS measures with international standards. However, the country has yet to establish its own standards for most plants and plant products, meat and meat products, fisheries and marine products for adoption or submission to Codex Alimentarius Commission of the Food and Agricultural Organization. This lack or inadequacy can be partly traced to technical personnel and laboratory facility constraints. Through the Agriculture and Fisheries Modernization in 1997, the Bureau of Standards was created, which is tasked to set and implement standards for agriculture and fishery products. However, this Bureau is not yet fully operational due to budgetary constraints.

The country's adherence to the GATT-UR/WTO also carries a commitment to enhance competitive capacity of domestic producers. This includes infrastructure support such as the construction and rehabilitation of farm-to-market roads, irrigation systems and post-harvest facilities. Part of the Competitiveness Enhancement Fund (CEF) established from the proceeds of the minimum access volume (MAV) of agricultural imports has been earmarked for infrastructure development. However, there have been delays in implementation primarily due to budgetary constraints.

Impact of tariff reforms on selected crops

Notwithstanding the structural adjustments, it is generally perceived that trade liberalization will lead to competitiveness in the agricultural sector. There are some apprehensions, however, on the effects on small farm producers in developing countries such as the Philippines. An assessment of the impact of agricultural trade liberalization was undertaken for the whole country and at the sub-national level for two of the country's most important agricultural crops, rice and corn, which are produced mostly by small farmers. The corn impact analysis focused on yellow corn which is mainly used for feed. The impact assessment has been confined to output and input tariff reforms for these two crops. The elasticities of supply, demand and price transmissions for wholesale and farm prices are used to quantify the effects of tariff reforms on production and demand. The welfare effects of tariff reforms are determined through the producer and consumer surpluses using the average price and quantities for 1997 as the base year. Although the elasticities were estimated through regression analysis, secondary data on supply and demand elasticities were adopted whenever deemed appropriate.

The rice sector

The Philippines sought the postponement of rice tariffication for ten years until the year 2004 under the GATT-WTO and its inclusion in the AFTA-CEPT scheme. In the next WTO

round of negotiations, policy-makers are faced with the decision of whether to seek an extension of the special treatment for rice or to replace the quantitative restriction for rice with tariffs and, if so, at what rate.

The National Food Authority (NFA), the central marketing agency for grains, had the exclusive authority to import rice free of duty for a long period. In 1999 the private sector was allowed rice imports of the minimum access volume (MAV). The assessment of trade reforms in rice accounts for the following tariff scenarios: first, from a duty free or zero tariff to 50%, which simulates the partial deregulation of NFA's monopoly on rice imports with private sector participation of the MAV whereby the 50% tariff applies. This assumes continuing private sector participation in rice imports. Second, rice will be tariffied at the rate of 200% after the year 2004 or earlier. In order to make analysis feasible, it is assumed that the tariff will be applied to all rice imports.

At the national level the scaling up of rice tariffs will result in increases in the wholesale price (WSPr) which will cause a decrease in rice demand (QDr). Prices received by farmers (FPr) will also increase, which in turn will induce paddy production (QSr) to rise. Rice producers will reap surpluses but consumers will experience losses. The losses exceed the gains resulting in net losses of 2.59 billion at 50% tariff and 10.1 billion at 200% tariff.

Table 4 Summary of impacts of rice tariffication, the Philippines.

Parameter	1997 Value	Tariff			
		0 to 50 % Increase* (Decrease)	% Change	0 to 200 % Increase* (Decrease)	% Change
1. WSP_r	P16,890/ton	P532.04/ton	3.15	P2,128/ton	12.60
2. FP_r	P7,980/ton	P143.53/ton	1.80	P574.13/ton	7.19
3. QS_r	8.555 M tons	0.051 M tons	0.59	0.203 M tons	2.37
4. QD_r	7.210 M tons	(0.065 M tons)	(0.90)	(0.259 M tons)	(3.59)
5. PS_r			P1.23 B		P4.97 B
6. CS_r			(P3.82 B)		(P15.07 B)

PS = Producer surplus; M = million; B = billion; CS = consumer surplus; P = Philippine peso; MPr = import price of rice, cif.

( ) Negative values of CS_r indicate consumer losses.

* Increase (decrease) compared to the 1997 value of the parameters.

In addition to farm price increases from the output tariff, reductions in fertilizer and agricultural machinery tariffs by 2% and 10%, respectively, will cause the net profit-cost ratios per hectare to rise by 9.5% at the 50% tariff and 42.86% at the 200% tariff.

For the regional level analysis, as similar procedure to the national level analysis was applied in Central Luzon region, which is a major rice producer. The changes follow the same directions as with the national level assessment. The assumed rates of rice tariff will result in increases in regional wholesale prices (5.25% and 21.0%), farm prices (5.04% and 20.16%) and production (2.12% and 8.47%); decreases in regional consumption (2.05% and 8.21%); and surpluses to producers and surplus losses to consumers. In contrast with the national level analysis, the percentage changes in in wholesale prices are only slightly above the percentage changes in farm prices. Also, being a rice surplus region, in Central Luzon producer surpluses exceed consumer losses, which will result in net welfare to the region by 131.22 million pesos at 50% and 0.73 billion pesos at the high tariff of 200%.

In the partial budget analysis, tariff reductions in fertilizer and agricultural machinery in addition to the increasing effect on farm prices of rice tariffs will result in higher net profit-cost ratios per hectare, by almost twice from 0.08 to 0.14 at 50% tariff and nearly four times from 0.08 to 0.30 at 200% tariff.

The yellow corn sector

About two-thirds of the country's livestock feed formulation is accounted for by yellow corn. Unlike rice, the quantitative restrictions for corn were replaced by tariffs under the GATT-WTO. The in-quota tariff of the MAV is 35% until the year 2004. The out-quota tariff was set initially at 100% in 1995 and will be reduced gradually to 50% in 2004.

In determining the effects of corn tariff reforms, the current 35% tariff under the MAV serves as the starting point of analysis. The first assumption for tariff reductions will be from 35% to 20% to be followed by another reduction to 5%. The latter assumption is consistent with the AFTA-CEPT's goal to reduce tariffs in the ASEAN region within the range 0 to 5% by the year 2010.

For the national level analysis, an import quantity (QMc) function was estimated for yellow corn in order to determine the effects of tariff reductions. The results indicate increases in yellow corn imports by almost 3% at 20% tariff and almost twice as much at 5% tariff (Table 5). The other effects of reduced tariff rates are decreases in wholesale price (WSPc) and in farm price (FPc). These changes in turn will cause demand for yellow corn (QDc) to increase by less than 1% at the 20% and 5% tariffs. On the other hand, yellow corn production (QSc) will diminish. The welfare impact will be consumer surpluses and producer surplus losses. Larger consumer surpluses will result in net welfare benefits of 330.53 million pesos and 663 million pesos, respectively, at the 20% and 5% tariff rates.

Table 5 Summary of impacts of yellow corn trade reforms, the Philippines.

		Tariff			
	1997	35 % to 20 %		35 % to 5 %	
Parameters	Value	Increase* (Decrease)	% Change	Increase* (Decrease)	% Change
1. QM_C	0.303 M tons	0.008 M tons	2.70	0.017 M tons	5.58
2. WSP_C	P7,400/ton	(P212.01/ton)	(2.86)	(P424.02/ton)	(5.73)
3. FP_C	P6,040/ton	(P168.08/ton)	(2.78)	(P336.75/ton)	(5.58)
4. QS_C	2.453 M tons	(0.048 M tons)	(1.97)	(0.097 M tons)	(3.96)
5. QD_C	3.487 M tons	0.026 M tons	0.74	0.052 M tons	1.49
6. PS_C		(P408.28 M)		(P809.75 M)	
7. CS_C		P742.04 M		P1.49 B	

PS = Producer surplus; M = million; B = billion; CS = consumer surplus; P = Philippine peso.
( ) Negative values of PS_r indicate producer losses.
* Increase (decrease) compared to the 1997 value of the parameters.

In the partial farm budget analysis, in spite of the reduction of fertilizer cost (tariff reduction for agricultural machinery was not applied due to the absence of this cost in the farm budget data), net profit per hectare decreases by 7.7% at 20% tariff and 15.9% at 5% tariff due to lower farm prices resulting from output tariff reductions.

Central Luzon region which is a minor producer of yellow corn was also chosen for the regional level analysis. The overall effects of tariff reductions of yellow corn in the region follow the same pattern as with the national level, that is, decreases in wholesale prices (-8.61% and -16.41%) and prices received by farmers (-8.29% and -15.80%); higher demand by 2.08% and 3.95%; and production reduction by 9.85% and 18.77%. Consumer surpluses will more than offset producer losses, with net benefits of 381.14 million pesos and 737.17 million pesos, respectively, at the 20% and 5% tariff.

In the regional partial farm budget analysis, the combined effects of the tariff reform in fertilizer and the depressed farm price effects of tariff reforms in yellow corn lead to lower net profits per hectare; the reduction will be 16.22% at 20% tariff and 31.54% at 5% tariff. The

impact of the reduction in agricultural machinery cost was excluded due to the absence of machinery rental in the secondary regional data for costs and returns.

Conclusions and strategies

Although the results of the impact assessments are good only as far as the assumptions of this study and limitations of the data would allow, the results of the study particularly the impact assessment provide important points to consider. First, the quantified impacts of tariff reforms indicate the probable directions of supply, demand, domestic prices, producer and consumer surpluses for the rice and yellow corn sectors. Second, tariff protection is not an efficient means of achieving higher incomes through higher prices. Similarly, the cost of protecting inefficient producers through higher tariffs is high. Efficiency can be achieved through other agricultural policies. Another point is that there is a trade-off between consumer and producer welfare as shown by the effect of increased tariff for rice and lower tariff for corn. Higher tariffs benefit producers while lower tariffs favor consumers.

Amidst the current free trade environment and based on the findings of this study, some measures or strategies are suggested.

- Agricultural trade liberalization and other agricultural policies must be harmonized. An open market policy must be accompanied by the efficient and timely delivery of productivity and other competitiveness-enhancing measures such as increased infrastructure investment in farm-to-market roads, irrigation systems and R&D support. These measures must run in parallel with trade reforms.
- Institutional capacity should be improved by investing in human resource development in the agriculture sector to improve policy formulation and implementation and extension services.
- Private sector participation in rice imports should be increased.
- Opportunities must be created for displaced producers who cannot compete with foreign counterparts. This includes the development of other agricultural sectors where the displaced producers can shift.
- High tariffs are a temporary strategy for protecting domestic producers. These should be gradually lowered. The advantages that free trade can offer must be explored, for example, in opening the domestic market for new and improved technology.

Comments on the Filipino Country Report

A.C. Costales[*]

The study dealt with two very important sectors in the Philippine agricultural economy, the rice and maize sectors.

Greater efficiency and competitiveness in the Philippine rice sector is fundamental in view of its important place in the social objective of food security. On the other hand, greater efficiency and competitiveness in the maize sector will have far reaching effects on the rapidly growing Philippine livestock industry, a sector which has consistently succeeded in lobbying for high protection rates, partly due to the high tariffs on imported maize.

Subjecting the rice and maize sector to international competition, however, would have wide ranging equity implications: on the rice sector, for its sheer size; on the maize sector, for having one of the highest poverty rates among households in agriculture. No doubt, the study has a high social significance. The magnitudes of predicted impacts of alternative trade policy regimes, however, are crucially dependent on the sizes employed for the parameters estimated, the demand and supply elasticities and the price transmission elasticities. Indeed the study should not stop at indicating directional impacts, as such directions could already be ascertained from theory, at least within the partial market equilibrium framework. The resulting parameter estimates of the study lead one to the conclusion that the demand for rice and maize and their supply are extremely price inelastic, i.e., that farmers and consumers would be quite unresponsive to price changes.

The use of nominal instead of real price changes in estimating demand and supply parameters would yield quite different price effect magnitudes. The other source of relative unresponsiveness of predicated demand and supply adjustments to alternative trade policy changes arises from the quite small estimated magnitudes of price transmission parameter from border to domestic prices. It should be quite understandable that through decades of insulation of the rice and maize sectors from the international market, except in periods of shortages in crises proportions, domestic prices, in real terms, had moved quite independently of world market conditions. It would however, not be accurate to maintain that they would continue to do so when they are subjected to a more liberal trade policy regime, where all quantitative restrictions are strictly tariffied, and where violations of agreements could be brought to the attention of the WTO.

Such independence, however, would hold in the case of the imposition of prohibitive tariffs, e.g. at 200% on rice imports.

In the treatment of the maize sector, livestock demand for feed also includes white maize (particularly in hog feed mixes) which does not end up in direct food consumption and industrial processes. This portion of white maize output is still sizeable and would affect the estimates on required imports of maize for livestock feed.

In the estimation of livestock feed demand parameters, it should be noted that there are no independently tracked data on maize consumption by livestock. Thus, in the BAS published supply-use estimates for maize, there is the entry on "Livestock Feed and Wastes" - a catch-all for all others not accounted for. The closest proxy to movements of maize demand by livestock

[*] Department of Economics, University of the Philippines Los Baños, Laguna, the Philippines.

would be the volume of mixed feed output by the feed milling firms. There are also no independently tracked volume data of maize consumption by livestock at the regional or provincial levels. There are only entries in livestock numbers.

In the face of the lack of precision of, and confidence in, the parameter estimates employed in the study, the study could take advantage of widely used demand and supply parameters from other sources. This would be a modest but prudent procedure, until new estimates are obtained.

For regional and provincial-level analyses, there is a study by Costales et al. (1999) covering the major producing provinces of Isabela in the North, and Bukindon and South Cotabato in the South. Detailed farm level information and competitiveness parameters could be extracted. Pampanga would be a poor choice for estimating representative farmer responses.

For rice, there is a study by Martinez (1999) also estimating changes in consumer and producer surpluses arising from trade liberalization in the rice sector, with a wide range of farm level information and competitiveness parameter.

References

Costales, A.C.; Gonzales, L.A.; Catelo, S.P.; and Valientes, R.M. 1999. Technology, Trade, and Policy Imperatives for International Competitiveness in Corn. SEZMEO-SEARCA, College, Laguna.

Martinez, V. 1999. Impact of Tariff Reduction on Global Competitiveness of the Philippine Rice Sector. An Undergraduate Thesis for the degree of Bachelor of Science in Economic, College of Economics and Management, University of the Philippines at Los Baños, College, Laguna.

Effects of Trade Liberalization on Agriculture in the Republic of Korea with Special Focus on CGPRT Crops

Myung-Hwan Sung[*]

Korean agriculture has progressed in line with the country's economic development. Attempts were made to develop the agricultural sector in the early 1960s. The objective of agricultural development was to increase production as Korea had suffered from a chronic food shortage. However, in the Korean economy, the importance of the agricultural sector has been shrinking with the progress of industrialization.

The Uruguay Round (UR) launched in 1986 was the eighth round of multilateral trade negotiations conducted under the General Agreement on Tariffs and Trade. The UR Agreement on agriculture has forced agricultural policy reform, which may remove all trade barriers and subsidies, to member countries. In the case of Korea, the negotiation held in December 1993 settled the details for an open form of major agricultural product market and established the size of reduction in subsidy due to trade preferential arrangements for developing countries.

Since the beginning of UR negotiations, Korea has opposed the tariff principle without exception but has opened the market by the minimum market access (MMA) instead of deferring tariffication in the case of rice. Korea has decided upon the maintenance of a quota system for a fixed period and tariff increases in the case of other publicly noted items by the method of setting a ceiling tariff in the case of non-concession items, respectively. The rights to import these items through state trade, quota auction, recommendation of real demander and so forth are effectively distributed and managed. Profits created by state trade and quota auction are absorbed into a fund and invested in business to raise competitive power.

Korea was recognized as a developing country for purposes of tariff reduction and compliance of fulfillment period. In particular, the calculation of tariff equivalent considers the base period of 1988-90 (1986-88 in the document of UR agreement on agriculture) and the reduction rate and period are reduced to two-thirds of the level of developed countries. However, import liberalization by tariffication on all agricultural, fishery and livestock products with the exception of rice, which is a major source of income for farmers, was inevitable.

Due to the conclusion of UR negotiations on agricultural products, Korea has imported rice by minimum market access from 1995. The MMA of 1-4% of domestic consumption has been granted. The quantities of import for barely, potato, and sweet potato among major agricultural products are 3-5% of total domestic consumption by MMA. The quantities of import for soybean and maize increased above the current import levels. Imports for red pepper, garlic, onions, and sesame, which were concession items before the UR agreement, are 3-5% of the level of total domestic consumption due to their import liberalization.

Under the system of the World Trade Organization (WTO), in Korea the stable supply of foodstuffs as a current outstanding question rises to one of food policies, because the self-sufficiency ratio is continuously decreasing and the importing of foodstuffs shows a continuous increasing tendency. If complete liberalization of agricultural trade is realized, Korean self-

[*] Korea Rural Economic Institute, Seoul, Republic of Korea.

sufficient rate of foodstuffs will markedly decrease. The ability of Korea to supply food, including the main staple, rice, is weak and very unstable. Another problem is to overcome the financial crisis that occurred in November 1997. The rising exchange rate also increased the production costs of the agricultural sector. The income and expenditure of farm households became worse with the increase in farming costs caused by rapid currency depreciation, increase in the interest rate and constraint of loans by financial institutes, and decrease in consumption demand for agricultural products.

In this situation of changing domestic and international environment, farmers' incomes in Korea are highly dependent on agricultural incomes and the impacts of trade liberalization on agricultural products are very significant. The greatest impacts are the decreases in the domestic prices of agricultural products. For this study, the economic effect of import quotas is applied to analyze the effect of trade liberalization on domestic agriculture at the national level. Considering the change of the food consumption patterns in Korea, rice, soybean, onion, and ginseng were selected for evaluation of the effect of trade liberalization.

A baseline was set as the basis for comparisons and measurement of the effects on price, production, and consumption of each of these agricultural products. The baseline for the four commodities was the average of the domestic prices, production quantity, and consumption amount during the 1992-1994 period (recent 3 years before launching the WTO). In this study two scenarios were considered. Scenario I for rice, soybean, and onion is the case that the import quota by MMA becomes 1% of total consumption after trade liberalization. Scenario II assumes that the import quota by MMA becomes 4% of total consumption after trade liberalization. In the case of ginseng scenario I assumed that the import quota by MMA becomes 0.25% of total consumption after trade liberalization, and scenario II used the value of 0.5%.

The effect of trade liberalization at the national level was calculated using the elasticities of demand, supply, and price transmission. That is, based on the effects on the consumption, production, and prices with trade liberalization, the changes in consumer and producer surplus are calculated. The results are not real, but only the expected behavior of producer and consumer welfare according to the further progress of trade liberalization. In the case of rice, scenario I shows that the consumer surplus, as a result of trade liberalization, would be increased by 261.3 billion, whereas the producer surplus would be decreased by 192.0 billion. Therefore, it can be expected that the social welfare gain will be 69.3 billion won. Scenario II indicates that the increase in consumer surplus would be 1,060.7 billion won compared to the baseline, whereas the producer loss would be 759 billion won. Therefore, the social welfare gain will be 301.7 billion won.

In the case of soybean, scenario I shows that the consumer surplus as a result of trade liberalization would be increased by 72.1 billion won, whereas the producer surplus would be decreased by 5.7 billion won. Therefore, it can be expected that the social welfare gain will be 66.3 billion won. Scenario II indicates that compared to the baseline, the increase in the consumer surplus would be 292.5 billion won, whereas the producer loss would be 22.6 billion won. Therefore, it can be calculated that the social welfare gain will be 269.9 billion won.

In the case of onion, scenario I shows that the consumer surplus as a result of trade liberalization would be increased by 13.8 billion won, whereas the producer surplus would be decreased by 2.4 billion won. Therefore, it can be expected that the social welfare gain will be 11.4 billion won. Scenario II indicates that compared to the baseline, the increase in the consumer surplus would be 56 billion won, whereas the producer loss would be 9.4 billion won. Therefore, it can be calculated that the social welfare gain will be 46.6 billion won.

In the case of ginseng, scenario I shows that the consumer surplus as a result of trade liberalization would be increased by 2.3 billion won, whereas the producer surplus would be

decreased by 1.2 billion won. Therefore, it can be expected that the social welfare gain will be 1.1 billion won. On the other hand, scenario II indicates that compared to the baseline, the increase in the consumer surplus would be 4.6 billion won, whereas the producer loss would be 2.4 billion won. Therefore, it can be calculated that the social welfare gain will be 2.3 billion won.

As a result, the effects of trade liberalization on consumer prices are greater than on producer prices. This means that the actual import quantities of selected commodities would be increased more than the import quantities estimated. All the selected commodities will have consumer gain due to the low consumer price and producer loss due to the decrease in producer price. The results indicate that the producer loss of a commodity which has high self-sufficiency such as rice and ginseng is larger than for a commodity which has low self-sufficiency such as soybean.

Partial budget analysis was used to evaluate the effects of trade liberalization at the farm level. For the partial budget analysis between with and without trade liberalization, the changes in the net return were calculated according to the change in farm price at the farm level. It is assumed that the input quantity and costs are not changed. If there is no trade liberalization, the farm price of rice per kg would be 1,847 won, increased by 7% compared to 1,726 won with trade liberalization. Although the seeding cost was reduced, trade liberalization of rice would reduce annual farm returns by 67,203 won per 10 *a*. In the case of soybean, the farm price of soybean per kg would be 2,035 won, increased by 5.4% compared to 1,931 won with trade liberalization. The trade liberalization of soybean would reduce annual farm returns by 20,691 won per 10 *a*.

Without trade liberalization the farm price of onion per kg would be 304 won, increased by 7.5% compared to 283 won with trade liberalization. Trade liberalization of onion would reduce annual farm return by 110,456 won per 10 *a*. If there is no trade liberalization, the farm price of ginseng per kg would be 17,267 won, increased by 0.5% compared to 17,181 won with trade liberalization. Although the seeding cost would be reduced, the trade liberalization of ginseng would reduce annual farm return by 34,791 won per 10 *a*.

From the above results, although the farm price of rice was only decreased by 7% at the national level, net returns of rice farming were reduced by 9.4% at the farm level. The negative effect of trade liberalization on net returns of soybean at the farm level was much higher than that of farm price. For onion, the farm price was decreased by 7.5%, however, net return was decreased by 11.4%. These results mean that net returns of farming households decrease and the condition of farm management deteriorates due to trade liberalization. The trade liberalization ginseng showed little effect of price change on net return at the farm level.

In summary, considering the overall results of this study, it seems that trade liberalization of agricultural products will increase consumer welfare. Nevertheless, it is expected that there would be a decrease in producer welfare and farm income. Also, due to trade liberalization, the price of the agricultural products would decline, then this would lead to a stagnation of growth in the agricultural industry. Furthermore, the population and the labor participation rate in rural areas would decline, therefore, the unemployment rate in agriculture will be a great issue in Korea.

If trade liberalization is completely allowed, agricultural production will decline on a large scale, then insecurity of farm households will be greatly increased in the agricultural sector. The growth of the agricultural sector, which has depended on the conditions of domestic demand and supply as well as changes in both inter and intra macro economic conditions (i.e., exchange rate and price change in domestic and world markets), will be seriously affected.

Currently, it is an important issue of agricultural policy to promote agricultural growth and rural development that will increase the low income of farm households. Accordingly, in

order to alleviate the current agricultural situation in Korea, agricultural policy is focussing on the construction of agricultural infrastructure for promoting production of paddy land and uplands. In order to cope with trade liberalization, the Korean government needs to invest in agricultural infrastructure so the government can improve the structure of the agricultural industry and evaluate the management ability of producers.

For these purposes, the government should increase investment in the construction of agricultural infrastructure to improve production conditions such as irrigation development, readjustment of arable land, and research and extension for grains. Also, the government needs to construct an integrated agricultural information system to improve production and marketing systems. For security of foodgrains, policy such as production support for the purpose of food security and consolidating competitiveness for self-sufficiency of foods, especially rice, is promoted. In order to reduce production costs, new varieties with high yield and high quality should be developed and efficient farm management should be accomplished by agricultural mechanization. Moreover, along with trade liberalization, the trade policy of import restriction needs to be changed into a policy of efficient import management of foodgrains.

Comments on the Korean Country Report

Ho-Seop Yoon[*]

In my opinion Dr. Sung explained properly what has happened in the process of trade liberalization of agricultural products, focusing on rice, soybean, ginseng and onions in Korea. He also suggests many recommendations for future Korean agricultural policy.

Korean agriculture has suffered from both the trend of trade liberalization after the Uruguay Round Agreement on Agriculture and the financial crisis which started in late 1997. Many empirical studies have dealt with the direction and magnitude of the effects of trade liberalization of the agricultural sector on demand and supply of agricultural products with its welfare effects on producers and consumers. Even though the direction of trade liberalization effects are the same for most studies, differences in the magnitude of the effects have been found mainly because of different elasticities employed in each study. This implies that more effort should be focused to get more realistic elasticities of demand and supply, which can be used to quantify the magnitude of effects of trade liberalization within a range of trade liberalization regime.

Most studies about the effects of trade liberalization have focused on output markets. However, agricultural input markets have also been liberalized together with liberalization of output markets, financial and capital markets. The liberalization of input markets has also brought significant changes in input and output markets. For example, seed industries in Korea are dominated by foreign capital. This may bring a change in output markets as well as a change in input markets. Therefore, considering the effects of the institutional changes in agricultural input markets, more empirical studies about the effects of trade liberalization should be made.

The effects of trade liberalization of feed grain markets should be dealt with in connection with a change in meat markets. Many empirical studies about the feed grain markets suggest that liberalization of feed grain markets would bring an increase in feed grain imports. However, this needs to be re-considered when meat markets are also being liberalized. In reality, the partly liberalized beef market will be completely liberalized in the year 2001. It is likely that the pressure of the import demand for feed grain such as soybeans will be reduced with further opening of beef markets. Accordingly, changes in feed grain markets including soybean, maize, etc., should be explained in conjunction with the changing situation of meat markets.

The next comment concerns policy mix. The policies which are suggested in this paper must be important in future agricultural policy. In addition, it is also important to set policy directions. At this time, a high priority should be given to an increase in farmers' income because trade liberalization has brought a loss of producer surplus and farmers' income. For this reason, agricultural support must focus on income policies. In this sense, a direct payment policy, which is largely implemented in the OECD countries, can be a suitable alternative for farm income problems.

Finally, the effects of the so-called IMF shock caused by the financial crisis on the agricultural sector should be mentioned because the crisis accelerated the opening of agricultural markets. The effects of the shock on agriculture were much greater than those of

[*] Korea Rural Economic Institute, Seoul, Republic of Korea.

trade liberalization. The growth rate of the agricultural sector was -6.2% in 1998 when the Korean economy was suffering the financial crisis. On the contrary, the growth rate was only -0.1% in 1994 when the Uruguay Round Agreement on Agriculture was finalized. Even though the growth rate of GDP for the economy as a whole recorded 4.8% for the first quarter in 1999 from the negative growth of -5.3% in 1998, the agricultural sector for the same quarter in 1999 was still in negative growth at -7.6%. Hence, the recession of the agricultural sector has continued into 1999, while the overall Korean economy began to recover. This implies that the agricultural sector cannot recover within a relatively short period of time from its recession.

The IMF shock not only decreased the demand for agricultural products through a fall in urban income, but also depressed agricultural prices. On the production side, input prices such as oil and chemicals went up rapidly. Especially, the prices of agricultural raw materials, which are imported from abroad, increased to a greater extent due to rising exchange rates. Therefore, farmers suffered from both lower demand and higher production costs. As a result, farmers' income in 1998 decreased by 12.7%, compared with the income in 1997, and non-farm income decreased by 19.6%. Farmers' debt increased by 30.7% in 1998. When interest rates doubled to about 30% in 1998, the farmers' burden with external borrowings became heavier.

These facts imply that effects of the IMF shock on the agricultural sector deserve more consideration, and that a risk management system for external shocks for the agricultural sector should be developed.

Effects of Trade Liberalization on Agriculture in Thailand

Kajonwan Itharattana[*]

Thailand's economy partly depends on the world economy. International trade has played a significant role as a source of foreign exchange and agricultural trade is the leading sector. Agricultural commodities have long been Thailand's major exports with a growth rate of 11% during the 1980-1996 period. The increase was due to rising trade of several export items, namely rice, rubber, sugar, frozen chicken and shrimp products. The export of maize decreased tremendously as a result of increase in the domestic livestock industry requiring feed for raising animals. It declined at a rate of 18.8%.

Total export value of agricultural commodities was 16,500 million dollars in 1996 in which rice was a major export commodity since the beginning of the nineteenth century. Rubber became a major export item in the twentieth century. Rubber and rice took turns holding the first rank of total agricultural exports. Furthermore, many agricultural products, namely maize, cassava, shrimps, frozen chicken, etc. were added to the list of important Thai export items.

Considering the percentage share of each agricultural commodity to the total export, it was found that the percentage share of rice to total agricultural export declined from 33.70% in 1960 to 12.30% in 1996. Rubber fell from 33.82% to 15.36% during the same period. Fisheries products, shrimps and shrimp products in particular became a major source of income.

Thailand's total import increased along with the development trend at a rate of 17.2% during 1980 to 1996. Pulp and paper products have been a major agricultural import group of Thailand followed by dairy products and soybean products.

Thailand's trade policies have been inherent in the national economic and social development plans. In the 1960s Thailand's development programs constantly focused on import-substitution industries. By the National Plan IV (1997-1981) and successive plans, the trade policies shifted for export-oriented industries to replace the agricultural sector. In the National Plan VII (1992-1996), Thailand began to gradually liberalize its trade policies.

Thailand's Ministry of Commerce is responsible for the general trade policies. This Ministry deals with controls on imports and exports, anti-dumping and countervailing policies, commercial registration, export promotion policies and occasional support to farm product prices.

The other ministries which are involved in trade-related policies comprise the Office of the Prime Minister, the Ministries of Finance, Industry and Agriculture and Cooperatives. Administering a free trade policy, Thailand, in general, exports and imports most commodities freely. However, certain items need to have export approval for reasons of stability, public health, national security and public morals. A few import items require approval of the authorities for reasons of protection of human, animal or plant life and morals. The main legislative measure is the Export and Import Act (1979) which may be enforced on international trade and imposed on export/import licensing and import quotas. Under the Customs Law

[*] Agricultural Economics, Ministry of Agriculture and Cooperatives, Kasetsart University Campus, Bangkok, Thailand.

(1926) and the Customs Tariff Decree (1987), the Minister of Finance is authorized to deal with customs matters and to levy, reduce or exempt export and import duties. The laws covering concessions for investment include the Investment Promotion Act of 1993.

With respect to trade policies and measures in Thailand, a mix of measures to protect and pace domestic economic activities, promote export and provide incentives for investment in various sectors has been employed. A high degree of tariff protection falls on the manufacturing sector, especially on finished products. The simple average applied tariff rate was 60% in 1982, which was cut to about 30% in 1994. In 1995, the applied import tariff ranged from zero to 100% with an average of 23.1%. With tariff reforms starting in January 1995, the average applied tariff rate was reduced from about 30% in 1994 to 17% in 1997. The overhaul of the tariff structure resulted in the reduction of applied rates from 39 to 6 rates.

Thailand applies a business tax (sales tax) on most imports. The incidence of this tax on imports and domestic products differs in various cases. The difference has been removed since 1992, when Thailand consolidated the system of business taxes into a value-added tax of 7% on goods and services, up to late 1997 when the rate was raised to 10%. Thailand also imposes excise taxes on a number of domestic products.

Import controls, mainly non-automatic licensing, are an important part of the trade policies of Thailand. Restrictions are imposed to protect domestic production. However, the coverage of import protection has decreased since the late 1970s. Currently the number of products under import licensing is larger than in the early 1980s. In the case of soymeal and fishmeal, the substitution of tariff-based policy for non-automatic licensing has been made. Surcharges or special levies continue to be imposed up to the present on imports of fishmeal, wheat and meslin flour and corn for animal feed.

Protection for imports for use with local-content is also applied, especially in industries promoted by the Board of Investment. However, most local-content requirements were abolished in April 1993, except those concerning manufactured dairy products.

Thailand imposes export taxes on a few items. The average incidence of export taxes has decreased. Export controls are imposed on about 150 products to control the quantity for domestic uses and to conserve natural resources and the environment. In the case of tapioca, an export quota is imposed by bilateral agreement. As Thailand has increasingly encouraged export, a number of programs provide duty and tax rebate on inputs for manufacturing merchandise for exports and on income form export-oriented projects. In the agricultural sector, the Thai government assists farmers through policies such as price intervention and cheap credit.

Regarding transport and communications in Thailand, freight movement within the country relies mostly on trucking. However, the other modes of transport of agricultural commodities cannot be neglected. While the national highway system has been expanded, many parts of the country lack adequate infrastructure. Anyway, the trucking industry dominated in the transportation system. The situation of railways was not good enough for transportation while the domestic transport service did not cope with its demand. Thus, to increase the competitiveness of the country, the availability and quality of the transport system need improvement. In addition, in globalization, trade supporting infrastructure is enhanced because transportation and communication technologies together with information technologies will create a much enhanced service capability.

Concerning post harvest facilities, the Thai government has attempted to develop central markets in major producing areas. The government has also promoted investment of the private sector and agricultural institutes in the area of infrastructure and marketing facilities to store and develop quality of farm products, e.g. warehouse, silo, cold storage and crop moisture reducing machines. However, the existing central markets and marketing facilities are inadequate. To

store commodities with good quality before distributing to consumers and/or processing plants, the warehouse, silo and cold storage facilities should be adequately distributed in the producing areas. In addition, infrastructure facilities to support marketing channels are required to operate the market system efficiently. Such facilities include export promotion, credit and quality standardization. The establishment of a one-stop service organization to take charge of inspection, analysis, promotion and regulation of the standards and certification of food and farm products in a systematic and comprehensive manner is required.

A review of the value of agricultural exports shows that this value has been dependent on export of a few traditional crops, such as rice, rubber and cassava. During 1980-1995, the value of these commodities showed a declining trend with the ratio to total export value decreasing from 35% in 1980 to 9% in 1995. This indicates that there was an increase in the export value of other agricultural commodities. The sectors which have increased their importance are livestock and fisheries, poultry and shrimp in particular. However, statistics also show that the import value of agricultural items has increased over time at a higher rate compared to that of exports. If this trend persists, the agricultural sector may face a trade imbalance in the future.

In the coming age of globalization. Thailand is facing increasing competition in the world market of agricultural commodities. Endorsement of the free trade concept results in adjustment of demand and supply among countries. The principle of comparative advantages of countries is brought into consideration. Apart from straight competition, trade policies of trading countries will influence production and marketing among countries. In addition, implementation under the WTO agreement is expected to have an impact on the production situation in major exporting countries, including Thailand. Reduction in producer subsidies of developed countries by 20% of producer income will lead to a downward adjustment of the production area and result in reduction of total export value of those countries. The adjustment is projected to have a positive effect on prices. Therefore, the change in prices will impact on a large exporting country like Thailand.

In the meantime, Thailand is to reduce import duties by an average of 24%. This will, in effect, open up the Thai market to increased import of those commodities priced lower than domestically produced goods. In addition, Thailand has to reduce producers' subsidies. This will affect major commodities which are subsidized, such as soybeans, palm oil, daily products and sugar.

While international trade in the agricultural sector is being regulated, it is important for the WTO members to study and analyze the impacts of trade liberalization on their major export and import products. The findings in the first phase of the project will lead to further study of trade liberalization effects in the second phase. The analysis covers major export and import commodities, namely rice, maize, soybeans and dairy products. The impacts on production, marketing and demand of the said commodities are analyzed both at the national and farm level. The findings are expected to help planners and policy-makers lay down appropriate policies and measures and develop the agricultural sector to be able to cope with changes in the world trade situation.

The analysis of impacts on rice is based on the FAO study which indicated that the Uruguay Round Agreement would increase the world price of rice by 7% and the assumption that the export price of 5% Thai rice will be the world price. The results of the analysis showed a positive effect on the Thai rice economy with a net gain of 148.421 million dollars. The analysis also included the impact of removal of the fertilizer subsidy, which increased farmers' production costs. However, the assessment of impacts does not include adjustment of other rice producing countries, which might adapt themselves to the changing would market situation. Therefore, Thailand needs to prepare itself by enhancing the efficiency of production, reducing

production cost, improving the quality of farm products in light of consumer demand, and developing product research and an information network of production and marketing in cooperation with the private sector.

Regarding assessment of impacts on maize, the effect of the 4% increase in the world price of maize due to the Uruguay Round would cause the domestic price to rise. A positive effect is observed because the domestic supply increases. Although there is a negative effect due to the expanding local livestock industries utilizing more maize as animal feed, the overall impact is a net gain to the country. However, the boom of the livestock industries will create a shortfall of maize supply and raise the need for more imports to compensate for the shortage. To prevent such problems, farm technologies to enhance maize production are needed including research and development with a focus on seeds. In times of great demand for maize, an import measure is required with a reduced tariff. In the meantime, maize exports need not be restricted in order to keep Thailand's market share in the world market.

In the case of soybeans, the assessment of the impacts is based on a reduction of soybean grain import tariff from 5 to 0% and of soybean meal from 15 to 10 and 0%. It was found that prices of domestic and imported soybeans were closely related. As the tariff was reduced from 5 to 0%, local soybean prices at both wholesale and farm levels declined. This would generate a loss in the producers' surplus of 3.302 million dollars and a gain in the consumers' surplus of 1.768 million dollars. Similarly, the reduction of soybean meal import tariffs from 15 to 10 and 0% would bring down prices of the domestically-produced soybean meal and increase the demand for the meal. This will create a consumers' surplus gain of 19.336 million dollars at the 10% tariff and 58.48 million dollars at no tariff.

However, local soybean production and imports show a close relationship with the use of soybean meal and oil products. A sufficiency in producing the meal would create an oil excess. To prevent this, an attempt to find the oil demand is made. With a 10% reduction of soybean meal tariff the soybean oil price would fall and the demand for the oil would increase from 107,997 to 124,370 tons which comes from 872,160 tons of the grain. This amount of grain can produce 671,563 tons of meal. Therefore, the feed industry would need to import part of the demand for the meal. However, the production increase to 872,160 tons as required might be difficult to achieve because in the national plan the annual target of 440,000 tons is specified.

When the impact of removal of the fertilizer subsidy was investigated, it was found that soybean farmers face a higher cost of production and their gross income would be incline. Efforts to enhance soybean productivity to reduce and cope with the domestic demand should focus on zoning for suitable cultivation, seed improvement research and development and better transfer of the production technologies and, lastly, formation of soybean farmer groups.

With respect to milk and milk products, free trade for skim milk powder would have a positive effect on the dairy processing industry, and, at the same time, a negative effect on the dairy producers both at the national and farm level. Therefore, assistance for dairy farms to compete with the cheaper skim milk powder is recommended such as enhancement of the production efficiency with quality improvement, designation of dairy farming zones with technical suitability, and organization of dairy farmers' groups.

Regarding the overall policy, a review, revision and rebuilding of the WTO commitments of each country is recommended. The CGPRT Centre can play role in this matter for the region. Furthermore, findings from the study indicate that Thailand needs to adjust itself for greater competitiveness. The guidelines for greater production and marketing potential should emphasize enhancement of farm production efficiency and cost reduction through technological initiatives, developments in commodity quality, processing and packaging and gear farm production toward the needs and requirements of the markets. Standardization of

commodities is a great concern. Zoning for the best production and quality control in all stages of production should be considered. Lastly, the development of human resources in the agricultural sector should not be neglected in order to keep pace with the changing world conditions. However, agricultural production must be practiced with environmental sustainability.

As a WTO member, Thailand would like to express its views and seek a common ground for action along with all other members of the world organization. Studies on trade liberalization should be aware of the capability of analysis of international trade issues by certain prominent international organizations such as UNCTAD and CGPRT, etc., and seek to solicit their technical assistance. The analytical results generated would be transferred to WTO member countries, the developing ones in particular, so that they would be strengthened to better participate in world trade.

Comments on the Thai Country Report

Yodying Kongtong[*]

General comments

The findings is the country report will help planners and policy-makers formulate appropriate policies and measures and develop the agricultural sector to be able to cope with changes in the world trade pattern in the future. I agree with all findings (under the simple model and the use of OLS for estimations) and support all recommendations in the report. These could be summarized as the need of Thailand to prepare herself by enhancing production efficiency, by reducing production cost, improving the quality of farm products from the farm level through marketing channel levels to conform with consumer demand, developing product research and development and setting up an information network on production and marketing in cooperation with the private sector.

These policy targets should be applied to all farm products which have been included in the study. Seed improvement research and development for crops, product zoning and better transfer of technologies could be added to the policies on maize and soybean. Moreover, strengthening the organization of farmers' groups in the dairy industry is important.

A critical point in the study is that Thailand needs to adjust herself for more competitiveness. Therefore, the study recommends that the guidelines for greater productivity and marketing potential emphasize enhancement of farm production efficiency and cost reduction through technological initiatives, developments in commodity quantity, processing and packaging and market-oriented production. It also recommends that zoning for best production and quality control in all stages of production should be considered. And lastly, the development of human resources in agriculture should not be neglected.

Specific comments

Rice

A price increase in the world market would benefit Thai farmers, but removal of the government subsidy on fertilizer would raise production costs and the farmer's profit would decline. I support the policy recommendation which proposes that production efficiency be enhanced, the quality of rice milling be improved, product research and development be increased, and an information network be developed.

I would like to add that the government should allocate resources from direct production support such as the subsidy on fertilizer to undertake these activities.

Maize

The price increase and net gain in profit to farmers will stimulate the production of maize. The proposal by the expert is to enhance production to cope with demand. Thailand is a net importing country now. Therefore, increasing production would reduce the potential import.

[*] Department of Economics, Faculty of Economics, Kasetsart University, Bangkok, Thailand.

However, this product is not a real consumption good. Thai maize is used as feed stock for the poultry industry, which produces for local consumption and export. Increasing the maize price would raise the cost of production, but the competitive status would be in the same position (because other things are equal). The other producing countries will face the same situation. This study did not analyze poultry products in world trade or world demand. Anyhow, if the world demand is not disturbed by other major factors or major shocks, I think that Thailand would have a net gain in this product. Increasing production will benefit maize farmers.

The policy guideline recommendation by the expert would be fruitful to the government.

Soybean

Soybean demand in Thailand could be categorized into two main sources, namely local oil crushers and local consumption by other farms. Demand for local oil crushers is a derived demand to produce soybean oil and meal. Soymeal is also a derived demand from the livestock industry. The structure of demand is quite complicated for soybean. The partial equilibrium analysis without analyzing the effect from the livestock industry might be misleading. However, if the world price is stable, there will be a negative impact to Thai soybean farmers. The Thai government has to do something to curb the production of soybean by influencing soybean farmers to grow less soybean and substitute with other crops.

The government is not in a good position for these products. The policy proposed by the expert is suitable. One thing I would like to add is that the government should take it seriously. The farmers should be better informed that they need to face world price competition. They cannot work under direct government support anymore. However, those measures should be undertaken gradually.

Milk and milk products.

This is the other product which has been under government protection. Free trade would hurt farmers as noted in the study. The government is not in a good position as with soybeans and soybean meal. I support the expert's policy recommendation, and I would add that the government should help the dairy farmers in some indirect way. Consumer subsidies such as the school milk program might be continued, but no other subsidy should be undertaken on the consumer side. Supply side management such as production efficiency would be fruitful to farmers.

Recommendations for further study

Two products covered in the study, namely maize and soybean meal, are not consumer goods. They are inputs in the poultry industry. This study did not touch upon the livestock industry, because livestock is not under the responsibility of the CGPRT Centre. To reflect the real picture in maize and soybean meal, I feel that a livestock industry study should be undertaken. The demand for Thai livestock (chicken) in the world market should be explored to justify the effect in maize and soybean products. I would recommend that the CGPRT Centre should fund this further study on the effects of the livestock industry on demand of maize and soybean meal in Thailand. This would give us a clearer picture in maize and soybean meal products.

Effects of Trade Liberalization on Selected Agricultural Crops in Viet Nam

Nguyen Ngoc Que[*]

Introduction

Viet Nam is located along the eastern edge of the Indo-Chinese peninsula with land of 330,000 square kilometers stretching about 1,600 km from 23° N to its southern tip at 8° N. The country is identified as a typical agricultural economy with 80% of the population living in rural areas and 74% of its labor force engaged in agriculture.

During the last two decades, under the implementation of economic structural adjustment, the agriculture of Viet Nam has been diversely developed with regard not only to production for domestic consumption but also for export. The main exportable crops of Viet Nam have grown both in quantity, quality and export value. They have contributed considerably to Viet Nam's economic development. Viet Nam also has high potential for developing various exportable upland and root crops such as coffee, tea, rubber, groundnut and so on. The ongoing movement of internal and external trade liberalization, and the expansion of national, regional and international markets have notably impacted on agriculture in Viet Nam. Deeply concerned about this matter, the Government of Viet Nam, therefore, has launched a series of economic and institutional reforms, encouraging farmers and agents to promote their agricultural activities, creating possibilities for market expansion.

The current movement towards production and trade liberalization in Viet Nam has positively affected agricultural performance. Viet Nam, step by step, has been shifting its self-sufficient mono-cropping agriculture with primitive farming technology to a more commercialized and diversified sector serving both domestic and international markets.

In recent years, agriculture has grown at a relatively stable rate of 4-5% per year. Food production has not only satisfied domestic demand, but also generated large surpluses for export with increasing quality. By 1997, annual food production of Viet Nam amounted to 30.6 million tons (in paddy equivalent), of which paddy rice was 27.5 million tons. Annual per capita food production, therefore, reached around 400 kg (Table 1).

Table 1 Food production.

	1990	1991	1992	1993	1994	1995	1996	1997
Food-grain (million tons)	21.49	21.99	24.21	25.5	26.2	27.57	29.22	30.6
Paddy (million tons)	19.23	19.62	21.59	22.84	23.53	24.96	26.4	27.5
Total population (million persons)	66.23	67.77	69.41	71.03	72.51	73.96	75.36	76.71
Per capita food (kg)	324	325	349	359	361	372	387	399

Source: General Statistics Office 1997.

With 3.55 million tons (or US$ 870 million) of merchandized rice export, now Viet Nam has become the second biggest rice exporter of the world, and rice is the third largest commodity in the list of Vietnamese exported goods. In general, exports of agricultural

[*] Centre for Research Information and Data Analysis, Institute of Agricultural Economics (IAE), Hanoi, Viet Nam.

products have significantly increased during the last decade. The total value of agricultural exports, therefore, is very impressive at US$ 2.4 billion. Agricultural products of Viet Nam have established their solid position in regional as well as in international markets (Table 2).

Table 2 Import and export of Viet Nam by sector.

	Annual Average of 1993-1997			
	Million US$	Growth (%)	Share (%)	
Total Import	8,049.8	29.98		
Total Export	5,718.8	31.22	100.0	
Trade Balance	-2,331.0			
Agro-Export	1,709.2	27.09	29.9	100.0
Export of Selected Crops	1,284.0	28.94	22.5	75.1
Rice	623.9	23.82	10.9	36.5
Coffee	410.1	47.02	7.2	24.0
Rubber	146.6	25.86	2.6	8.6
Peanut	72.2	-1.64	1.3	4.2
Tea	31.1	15.79	0.5	1.8

Source: General Statistics Office.

The general tendency of economic improvement in Viet Nam during the period of 1991-1997 is illustrated by the relatively high annual growth rate of around 9% (Table 3). The shift in economic structure towards gradually reducing the proportion of agriculture and increasing the share of industry and services has obviously taken place in the country during the last two decades. This is inevitable and a sound tendency of economic development.

GDP of the agricultural sector in 1996 amounted to about VND15,551 billion at 1989 prices, up from VND12,264 billion in 1991. The annual GDP growth rate of agriculture during this period averaged 4.86%. Agriculture shared of 32.47% of the total GDP in 1996. Thus, Vietnamese agriculture has been and still remains one of the most important sectors of the economy providing a great contribution to the national welfare.

Table 3 GDP by economic sector - structure and growth rate (in constant 1989 prices).

	1991	1992	1993	1994	1995	1996	1991-96
GDP by Sector, billion dong	31,286	33,991	36,736	39,982	43,797	47,888	38,947
Agriculture*	12,264	13,132	13,634	14,169	14,892	15,551	13,940
Industry	7,228	8,242	9,324	10,631	12,114	13,861	10,233
Services	11,794	12,617	13,778	15,182	16,791	18,476	14,774
Composition of GDP (%)	100	100	100	100	100100	100	100
Agriculture*	39.20	38.63	37.12	35.44	34.00	32.47	35.79
Industry	23.10	24.24	25.38	26.59	27.66	28.95	26.27
Services	37.70	37.13	37.50	37.97	38.34	38.58	37.94
GDP Growth Rate (%)	5.9	8.6	8.0	8.8	9.5	9.3	8.8
Agriculture*	2.1	7.1	3.8	3.9	5.1	4.4	4.8
Industry	9.0	14.0	13.1	14.0	13.9	14.4	13.9
Services	8.0	7.0	9.2	10.2	10.6	10.0	9.0

Source: General Statistics Office.
Note: * Agriculture including Forestry and Fishery.

Domestic trade policies

Since 1982 domestic trade of agricultural products has been gradually liberalized. All the controls such as fixed prices, rural procurement and public monopoly in the domestic market were abolished. At the farm-gate, farmers have been permitted to trade with

intermediaries of their choice. The restrictions of agricultural commodity flows across provincial boundaries were also removed in the early 1990s. The economic restructuring in Viet Nam that substantially reduced the predominance of state-own enterprises in agricultural marketing and processing has paved the way for more active involvement of the private sector in economic activities. As a result, the domestic trade and marketing of agricultural products is now mainly in the hands of the private sector, with an estimated share of approximately 60-80% of marketed products. Nevertheless the government has kept certain interventions in the agricultural market. In the domestic market, state trading companies are expected to stabilize prices. The main measure of the government in this regard is to instruct state corporations to purchase agro-products (mainly rice) from farmers and private traders when the retail price falls below the "reference" bottom level determined by the government, by offering working capital with a subsidized interest rate (of 1% per month with a maturity of six months). The subsidies are funded from the Price Stabilization Fund (PSF) established in April 1993.

Current specific border measures affecting foreign trade in Viet Nam include:

- Implementation of quality management and SPS inspection measures necessary to protect human, animal or plant life or health;
- Customs duty: export/import tax (not very high and less effective in terms of trade restriction). Calculation of customs duty is based on FOB price for exported goods and CIF price for imported goods. In some abnormal cases, duties are based on minimum purchase or sales prices set up by the state (i.e. by related ministries such as MOF, MOT, and General Department of Customs). Duty rates applied in tariffs include normal and preferential rates (preference is applied for ASEAN countries based on CEPT Treaty);
- Import-export quota applied mainly to rice and fertilizers;
- Import-export licensing procedure limiting foreign trade mainly to SOE is the most effective trade restriction method used by the state;
- Naturally low domestic prices caused by low average level of income tend to be a major obstacle to agricultural import in Viet Nam.

Effects of trade liberalization on agriculture at national level in Viet Nam

To analyze the effect of trade policies at the aggregate level, this study is based on different methods including econometric analysis of supply and demand behavior parameters using secondary data of the 1989-1990 period provided by the General Statistical Office (GSO), and construction of a partial equilibrium model of Viet Nam's agricultural trade (MOVAT) with a special focus on some major exportable crops. The commodities mentioned here are rice, coffee, tea and groundnut, which play a substantial role in the development of Viet Nam's agriculture. In 1997, the selected crops in total contributed around 48% of gross agricultural product, or almost 60% of cultivation. On average for the 1990-1997 period, these four crops covered nearly 70% of the total sown area. Among them rice has the largest share in terms of area occupied as well as production and exports (Table 4).

During the last five years (1993-97) these four crops brought in about 66.5% of total agricultural export earnings.

Table 4 Sown area and yield by crop in Viet Nam.

	1990 – 1997		
	Average	Growth (%)	Share (%)
Sown Area (1000 ha)			
All Crops	10,186.4	3.37	100.0
4 Selected Crops	7,062.3	2.62	69.4
Rice	6,603.1	2.35	64.8
Coffee	159.2	12.38	1.6
Tea	67.1	4.51	0.7
Peanut	232.9	3.24	2.3
Crop Yield (ton/ha)			
Rice	3.52	2.91	
Coffee	1.25	10.56	
Tea	2.68	2.54	
Peanut	1.22	4.10	

Source: General Statistics Office.

Supply and demand behavior of the selected crops in Viet Nam, 1986-1997

The study on effects of the movement towards free trade on the development of agriculture needs to start by quantitatively identifying major relationships between prices and quantities of commodities supplied or demanded. For the case of Viet Nam, three functional forms are used to describe these relationships, i.e. demand, supply and price transmission functions (Table 5).

Based on data provided by the GSO, some essential coefficients/elasticity of supply, demand and price transmission functions for rice, coffee, tea and peanut were estimated. They are statistically significant, and their signs and magnitudes seem to be consistent with prior expectations. Rice is the most important staple food crop in the country and can be classified as a necessary good. Tea is considered the most popular beverage in Viet Nam. However, coffee tends to be a luxury beverage for the rural low-income population in the country, but it is a very important cash crop with relatively high export potential. Accordingly, the regression analysis proves that demand for rice compared to other crops such as coffee, tea and peanut tends to be much less elastic with respect to its own price.

Table 5 Demand and supply elasticity of the selected crops in Viet Nam (1986-1997).

Parameter	Rice	Coffee	Tea	Groundnut
SPE	0.2564	0.9448	0.1556	0.3307
DPE	-0.4650	-1.6561	-1.4553	-1.3901
DYE	0.5517	5.6705	4.6620	2.7664
PTC	0.5679	0.9035	0.2208	0.6910

Note: SPE = Supply own price elasticity;
DPE = Demand own price elasticity;
DYE = Demand income elasticity;
PTC = Coefficient of farm-wholesale price transmission in linear form.

Viet Nam's agricultural trade model for the selected crops

To examine the effects of trade liberalization at the national level on production, marketing and demand, a model of Viet Nam's agricultural trade (MOVAT) was designed simulating the trade of four important agricultural commodities, which are rice, coffee, tea and peanut. The model has eight types of endogenous variables as follows:

1) P^D Consumer price (dong per kg);

2) P^S Producer price (dong per kg);
3) D Quantity demanded (thousand tons);
4) S Quantity supplied (thousand tons);
5) X Exports (thousand tons);
6) M Imports (thousand tons);
7) IXT Implicit export tax (dong per kg);
8) IMT Implicit import tax (dong per kg).

The main component of the model is a system of equalities with eight blocks. The list of these equations is given below:

1) Demand equations;
2) Supply equations;
3) Price transmission (domestic producer-consumer price linkages);
4) Supply-demand balance;
5) Export price relationships;
6) Import price relationship;
7) Export quota;
8) Import quota.

The objective of trade liberalization in agriculture is to create more free internal and external markets and establish a fair agricultural trading system. Countries involved in this process should make binding commitments in reducing and removing all barriers to international trade. Thus, to measure the effect of liberalization of agricultural trade in our model, two policy options related to different levels of free trade are used and their simulated outcomes are compared with that of the base scenario of the distorted trade regime.

The following table provides the key variables in the base-run scenario related to rice, coffee, tea and groundnut (Table 6).

Table 6 Summary of base scenario - distorted markets in Viet Nam.

	Unit	Rice	Coffee	Tea	Peanut
Quantity supply	1000 ton	26,594.1	441.2	232.5	352.9
Quantity demand	1000 ton	14,005.1	15.1	17.1	150.7
Export volume	1000 ton	3,680.0	404.0	31.5	84.0
Consumer price	Dong/kg	2,546.6	16,864.8	8,401.2	7,255.6
Farm-gate price	Dong/kg	1,332.2	15,781.8	1,817.7	4,950.4
Implicit export tax	Dong/kg	221.8	1,166.2	2,323.8	479.4
Import tax and fee	%	2	7	5	5

Option 1 - Removing export quota, export taxes and other distorted factors with respect to rice, coffee, tea and groundnut

The first policy option is to eliminate all distortion factors including trade quota, taxes and other constraints reflected in the ambiguous part of the gap between domestic and world prices. It implies that the assumption of a free trade regime is reducing the gap between domestic and world prices to the level of justifiable normal market margins only. In the MOVAT, this is simulated by removing all the constraints on exports of related crops, which were applied in the base-run scenario. The impact of trade liberalization measures in the first policy option on production and trade of the four crops in Viet Nam are identified.

According to the results of the model, the removal of all barriers to trade in terms of export/import quota and taxes, as well as other non-tax restrictions, brings about an increase in consumer and producer prices on an average of all the selected commodities by 11.2 and

12.5%, respectively. The combined effect is that total export earnings from the crops concerned would rise up dramatically by around 26%. The overall producer gain appears to outweigh all the losses accrued to consumers, rent-seeking traders and government revenue making the net social welfare amount to US$ 306 million (Table 7).

Table 7 Result of Option 1 - Effects of removal of all trade restrictions in comparison with base scenario of distorted markets.

		By Individual Crop				For All 4 Crops	
	Unit	Rice	Coffee	Tea	Peanut	Billion D	Million $
Farm-gate price	Dong/kg	1,494.0	18,399.0	2,546.7	5,596.1		
Change	Dong/kg	161.7	2,617.3	729.0	645.7		
Percent change	%	12.14	16.58	40.11	13.04	12.47	
Consumer price	Dong/kg	2,831.4	19,760.0	11,700.0	8,190.0		
Change	Dong/kg	284.8	2,895.2	3,298.8	934.5		
Percent change	%	11.18	17.17	39.27	12.88	11.23	
Quantity supply	1000 ton	27,385.8	510.0	245.1	367.5	52,979.1	4,075.3
Change	1000 ton	791.7	68.8	12.6	14.6	2,563.2	197.2
Percent change	%	2.98	15.60	5.40	4.14	5.08	
Quantity demand	1000 ton	13,331.5	11.6	10.6	127.3	39,143.1	3,011.0
Change	1000 ton	-673.6	-3.5	-6.5	-23.4	-2,243.9	-172.6
Percent change	%	-4.81	-23.08	-38.24	-15.50	-5.42	
Export volume	1000 ton	4,880.0	472.9	40.7	117.1	28,891.3	2,222.4
Change	1000 ton	1,200.0	68.9	9.2	33.1	5,956.5	458.2
Percent change	%	32.61	17.05	29.10	39.37	25.97	
Overall producer gain	Bill. D	7,685.8	1,377.0	787.8	336.6	10,187.2	783.6
Of which, farmer gain	Bill. D	4,365.5	1,244.8	174.1	232.6	6,017.0	462.8
Consumer gain	Bill. D	-3,892.2	-38.7	-45.6	-129.9	-4,106.5	-315.9
Change in trader profit	Bill. D	188.8	85.1	8.9	15.0	297.8	22.9
Change in trade rent*	Bill. D	-816.4	-471.1	-73.2	-40.3	-1,401.0	-107.8
Change in Gov. revenue	Bill. D	-231.5	-698.5	-30.7	-38.2	-999.0	-76.8
Net Social Gain	Bill. D	2,934.4	253.7	647.2	143.3	3,978.5	306.0

Note: Nominal exchange rate is VND13,000 per USD.

* Trade rent is assumed to be the implicit export tax embodied in export quota (applied for rice only) and in other policy distortion factors (for other crops).

Option 2 - Increase the world price for all of the selected crops by 7%

To examine the combined impact of internal and external trade liberalization under WTO and AFTA conditions, apart from the elimination of all trade restrictions which were built in the base scenario, the second trade policy option also assumes an increase of 7% in the world prices for exports of the four crops in Viet Nam. This assumption is consistent with the result of the FAO (1995) study on the impact of the Uruguay Round on Agriculture.

According to the outcome of the second policy option, there would be some very emotional impacts on domestic prices for these crops as well as great overall welfare in the agricultural sector. The average consumer as well as producer prices of all these four crops would rise up by nearly 20% compared to the base scenario. Global free trade, which may induce an increase of 7% in world prices for Viet Nam exports of agricultural products as assumed in combination with removal of all restrictions on foreign trade, would have an incredible impact on Vietnamese agriculture, in general, and on the development of each concerned crop as well. The total export value of these four crops would rise by more than 40% compared with the base scenario. Finally, the general effect of the second policy experiment is demonstrated with a great economic improvement in terms of net social gain of US$ 628 million (Table 8).

Table 8 Result of Option 2 - Effects of full removal of all export restrictions and 7% increase in world price for selected crops in Viet Nam.

	By Individual Crop					For All 4 Crops	
	Unit	Rice	Coffee	Tea	Peanut	Billion D	Million $
Farm-gate price	Dong/kg	1,606.6	19,649.5	2,727.7	5,985.9		
Change	Dong/kg	274.3	3,867.7	910.0	1,041.9		
Percent change	%	20.59	24.51	50.07	21.07	20.92	
Consumer price	Dong/kg	3,029.6	21,143.2	12,519.0	8,763.3		
Change	Dong/kg	483.0	4,278.4	4,117.8	1,507.8		
Percent change	%	18.96	25.37	49.02	20.78	19.01	
Quantity supply	1000 ton	27,899.9	542.7	247.7	375.9	58,413.4	4,493.3
Change	1000 ton	1,305.8	101.5	15.2	23.0	4,272.3	328.6
Percent change	%	4.91	23.01	6.54	6.53	7.89	
Quantity demand	1000 ton	12,918.6	10.4	9.6	115.9	40,493.6	3,114.9
Change	1000 ton	-1,086.5	-4.7	-7.5	-34.8	-3,790.5	-291.6
Percent change	%	-7.76	-31.23	-44.03	-23.08	-8.56	
Export volume	1000 ton	5,634.8	505.2	42.2	134.1	34,505.8	2,654.3
Change	1000 ton	1,954.8	101.2	10.7	50.1	9,965.6	766.6
Percent change	%	53.12	25.05	33.99	59.64	40.61	
Overall producer gain	Bill. D	13,159.3	2,104.8	988.8	549.5	16,802.3	1,292.5
Of which, farmer gain	Bill. D	7,474.5	1,902.7	218.5	379.7	9,975.4	767.3
Consumer gain	Bill. D	-6,501.6	-54.6	-54.9	-201.0	-6,812.1	-524.0
Change in trader profit	Bill. D	369.5	168.6	13.3	27.1	578.6	44.5
Change in trade rent*	Bill. D	-816.4	-471.1	-73.2	-40.3	-1,401.0	-107.8
Change in Gov. revenue	Bill. D	-231.5	-698.5	-30.7	-38.2	-999.0	-76.8
Net Social Gain	Bill. D	5,979.3	1,049.138	843.3	297.1	8,168.8	628.4

Note: Nominal exchange rate is VND 13,000 per USD.

* Trade rent is assumed to be the implicit export tax embodied in export quota and other distortion factors.

Impact of trade liberalization on location-commodity specific agriculture

To examine the impact of trade liberalization on agriculture at regional and farm levels, four specific places were chosen with relatively large areas of the relevant crops, i.e. Mekong River Delta for rice, Dak Lak province for coffee, Thai Nguyen province for tea and Nghe An province for peanut. Partial budget analysis of these four crops in each specific region was carried out, through which the trade liberalization impact at regional and farm levels was illustrated. The cost and returns for each crop in the particular region/province were computed based on the location-commodity specific survey conducted by the Institute of Agricultural Economics (IAE) in 1996-1997. These survey data with the 1996-1997 prices of inputs and outputs were used for the scenario without trade liberalization. For the scenario with full trade liberalization only, prices for outputs of rice, coffee, tea and peanut were assumed to be increased by the same amounts as estimated in the second trade policy option, i.e. 20.6, 24.5, 50.1 and 21.1, respectively. The yields and input levels of the selected crops for each specific region in the scenario with free trade are assumed to remain unaltered.

Although it is a very rough approximation, the result of this partial budget analysis with and without trade liberalization might demonstrate some very impressive impacts of free trade at regional and farm levels (Table 9). Net return per hectare in the case of rice in the Mekong River Delta, coffee in Dak Lak province, tea in Thai Nguyen province and peanut in Nghe An province would increase by 1.4 million dong, 8.7 million dong, 9.3 million dong and 1.6 million dong, respectively due to full free agricultural trade. Consequently, net returns accrued to the farmers growing rice in MRD, coffee in Dak Lak, tea in Thai Nguyen, and peanut in Nghe An would increase substantially by 3.8 million, 9.4 million, 2.1 millions and 0.25 million dong,

respectively (or net returns of these crops in the selected region may soar up drastically by 1.7 times, 1.7 times, 5.7 times and 2 times, respectively).

Table 9 Partial budget of rice, coffee, tea and peanut in selected areas, 1996-1997.

	Rice MRD	Coffee Dak Lak	Tea Thai Nguyen	Peanut Nghe An
Gross returns (GR)				
Farm-gate price without tradelib (dong/kg)	1,353.7	10,323	2,223	4,686
Farm-gate price with tradelib (dong/kg)	1,632.5	12,853	3,336	5,673
Yield (kg/ha)	5,370.6	3,448	8,397	1,645
GR without tradelib ('000 dong/ha)	7,270.3	35,592.9	18,664.9	7,708.5
GR with tradelib ('000 dong/ha)	8,767.3	44,316.7	28,010.3	9,332.6
Variable cost ('000 dong/ha)				
1. Fertilizer	1,165.0	7,448.7	3,010.7	1,437.0
2. Plant protection	527.9	568.0	1,536.1	89.0
3. Irrigation water	349.7	2,136.7	642.1	45.0
4. Small tools	54.1	196.6	256.1	65.0
5. Labor cost	1,277.6	9,990.7	6,791.2	2,553.0
6. Others	1,576.4	1,485.0	3,288.8	1,819.0
Total cost (1-6)	4,950.7	21,825.7	15,525.0	6,008.0
Cost of working capital (20% interest per year)	206.3	2,182.6	1,552.5	200.3
Total variable cost ('000 dong/ha)	5,157.0	24,008.3	17,077.5	6,208.3
Total fixed cost ('000 dong/ha)	490.6	3,523.7	1,476.4	697.0
Net returns (NR) over total costs:				
NR without tradelib ('000 dong/ha)	1,622.7	8,060.9	110.9	803.2
NR with tradelib ('000 dong/ha)	3,004.4	16,784.8	9,456.4	2,120.4
Change in NR ('000 dong/ha)	1,381.6	8,723.8	9,345.5	1,317.2

Source: IAE Commodity Specific Survey data, 1996-1997, recomputed by author.

* Note: Prices of output of without tradelib at 1996-1997 level; prices of outputs of with tradelib at 1996-1997 level with increases by 20.6, 24.5, 50.1 and 21.1, respectively, with regards to rice, coffee, tea and peanut.

Concluding remarks and policy implications

This study has examined the effects of trade liberalization on the major exportable crops. According to the results of various simulations, if Viet Nam removes all export restrictions the country's overall agricultural export is likely to increase nearly 26% and, if the regional and world trade agreements are fulfilled, it might result in at least a 7% increase in the world prices for Viet Nam's agricultural exports and therefore a more than 40% increase in export earnings would accrue to Viet Nam's agricultural sector.

In short, the benefit of free international trade has been proved in this study with its findings that sound to be very convincing for Viet Nam. However, the implementation of binding commitments under the WTO and AFTA agreements on agriculture is not easy in real life. Acceding to the regional and world trade organizations Viet Nam may still have various problems and challenges of its own, which need extra precautions and further comprehensive studies, for instance:

- Price stability and food security for its low-income population may become great concerns of Vietnamese policy-makers while the country liberalizes its foreign trade in the agricultural sector. There is a need to further accelerate agricultural diversification, income-generation and poverty alleviation programs in rural and marginal areas.
- As a country of high potential for export of agricultural products, Viet Nam needs to further improve competitiveness in the international agricultural markets through expanded programs for enhancing product quality, upgrading physical infrastructure,

strengthening the banking system, reforming the inefficient state enterprise sector and creating more access for the private sector to domestic and foreign trade.

- For Viet Nam, the shift to tariffication from non-tariff border measures and removal of import licensing procedures may result in lack of effective protection in agriculture.
- The current tariff level in agricultural commodities is not high compared to that of other countries. However the application of the so-called minimum-buying price list in calculating import tax tends to increase the protection level of the current tariff system. Thus, removing this minimum-buying price list in access to regional and world trade communities may weaken the protection level of Viet Nam's agricultural production compared to that of other member countries.
- Establishing an actually fair trade with other countries of regional and international communities under the general agreed system of binding trade protection measures is not an easy task for Viet Nam, since it lacks sufficient experience and capacity in these areas. Thus, efforts must be made to improve the technical and managerial capacity of government officers working in related fields.

Comments on the Vietnamese Country Report

Cu Chi Loi[*]

Strong points of the report

The report is very comprehensive covering a wide range of issues related to Viet Nam's agricultural development for the last decade. The report also presents very well the process of renovation in Viet Nam, including policy reform and its impacts on agricultural performance.

Given the constraints of knowledge, data and budget, the standard analysis (quantifying and scenario projection) of the report is quite impressive and its results are relevant to what is expected. The methodologies applied in the report are rarely in Viet Nam's scientific reports, where we find that most programs are carried out by international agencies or with international assistance.

For further improvement

Although the report is quite good to my understanding, some efforts should be put to improve the quality of the paper.

Despite good quantitative analysis in the second part of the report, it seems to lack description of the trade regime that has affected agricultural development. This description is very important to understand the basic scenario for simulation. In fact, the trade regime of Viet Nam is quite complicated with a lot of non-tariff measures that could be major constraints for development of agriculture and for the entire economy as well.

For simulation, as mentioned above, due to comprehensive application the non-tariff measures such as surcharge, quota, monopoly, so on and so forth, some parameters applied in the simulation should be modified, for example, export tax equivalents instead of export tax.

The paper would be more interesting if there were some analysis on production function of the concerned commodities, because the input markets for agriculture production are badly distorted by government (trade) policies. Trade liberalization on input markets would have a very strong impact on agricultural production and market prices also.

In general, the paper is very good in making recommendations to policy-makers of Viet Nam to help them understand the current situation and revise policies in order to stimulate further development of Viet Nam's agriculture and the economy as well.

[*] Institute of Economics, Hanoi, Viet Nam.

Trade Liberalization: Impacts and Implications for Bangladesh Agriculture

Mostafa Abid Khan[*]

Introduction

The momentum towards global trade liberalization was given new impetus with the successful conclusion of the Uruguay Round (UR) and the establishment of the World Trade Organization (WTO) on January 1, 1995. One of the major achievements of the UR was the inclusion of agriculture into the GATT system. It is considered to be a milestone in the effort to liberalize global trade in agriculture. The Agreement on Agriculture (AoA) is aimed at establishing a fair and market oriented agricultural trading system through reduction of border protection and gradual phasing out of export and domestic support subsidies. It is widely recognized that the developing countries have substantial benefits to be accrued from liberalization of trade in agriculture. However, such gains will neither be guaranteed, nor equitably distributed amongst countries. It is not easy to establish the nature of implications of trade liberalization on Bangladesh agriculture. At least three factors contribute to this uncertainty:

- Policy reforms that have been undertaken by the Government of Bangladesh since the mid 1980s go much beyond those required by the AoA;
- Both production and import trade of agricultural commodities, especially food items fluctuate heavily depending on climatic conditions;
- Export of agricultural products is limited to a small number of products and the markets for these were more or less open in some of the countries even prior to the conclusion of the UR.

Bangladesh agriculture in the national economy

Agriculture remains the single most important and largest sector in Bangladesh's economy, contributing about one-third of the country's GDP, although this share has seen a substantial decline from about 42% of GDP in the 1980s to around 32% in recent years. Nevertheless, the role that agriculture plays in Bangladesh is quite visible; the sector alone employees 63.2% of country's total labor force, and 80% of total population depends on agriculture for their livelihood. The sector's role is crucial for the country's food security, poverty alleviation and sustainable economic development.

Bangladesh agriculture is characterized by high uncertainty as it is vulnerable to natural disasters such as floods, cyclones at one time and drought in others. This vulnerability to natural disasters compounded with a heavy reliance on annual rains for production of the main crop, rice, results in severe fluctuations in crop production and an erratic growth rate in agriculture (Figure 1). The crop sector dominates the agriculture of Bangladesh accounting for 71.71% of value added in the agriculture sector. Rice, wheat, pulses, oilseeds, sugarcane, potato, vegetables, jute and tea are the main crops of Bangladesh. Rice dominates the crop sector in

[*] Bangladesh Tariff Commission, Dhaka, Bangladesh.

terms of production as well as use of cultivated land. In recent times, livestock and fisheries have demonstrated quite robust growth rates of around 8% and account for 21% of value added in the agriculture sector.

Figure 1. Growth rate in GDP and agriculture.

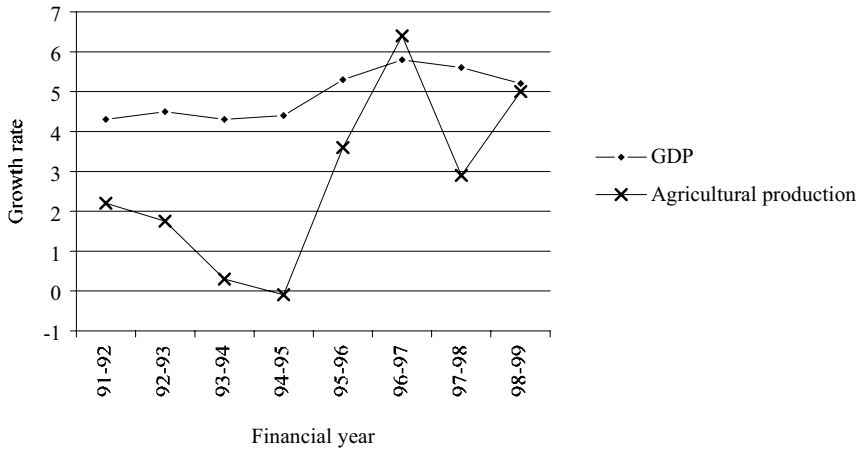

Source: Bangladesh Economic Review 1999.

Policy reforms in Bangladesh

Since the mid 1980s, Bangladesh has been undergoing structural reforms which are aimed at liberalizing the economy and making it market-oriented by reducing the role of the Government and giving encouragement to the private sector. The external trade sector has been liberalized through withdrawal of quantitative restrictions and steady reduction in import tariffs. At present, 121 products at 4-digit HS code level are in the control list, out of which only 27 are agricultural commodities. Most of these, except table eggs, tendu leaves (a raw material of locally made cigarettes) and sugar are included in the control list on health and religious grounds. The average tariff rate has been reduced from 57% FY 1991-92 (pre-reform period) to 16.76% in FY 1999-2000. In Bangladesh, agriculture has traditionally received lower border protection compared to the industrial sector due to the country's dependence on food imports (Table 1). Bangladesh's export regime is fairly deregulated with a small number of commodities in the control list. Although a variety of export incentives and export promotion measures have been put in place to facilitate the growth of exports, the only incentive available to agricultural commodities is reduced airfare for the export of vegetables.

Under the reform programmes, the Bangladesh Government has cut down her role significantly in the area of production, pricing and marketing of agricultural inputs and outputs. At present, import, distribution and marketing of seeds, irrigation equipment and fertilizer are handled by the private sector. On the other hand the Government continues to take various supportive steps each year in order to ensure timely availability of agricultural credit, fertilizer and other agricultural inputs. The Government also undertakes various initiatives in order to ensure food security in the country, some of which are:

- preservation and maintenance of security stocks with a view to making up anticipated production and stock losses stemming from periodical droughts, floods and cyclones;

- development of a safety net programme for vulnerable groups through improvement and enlargement of targeted food distribution;
- stabilization of prices of food grains in relation to production cost and purchasing power of consumers.

Table 1 Unweighted and weighted average tariff rates of all commodities vis-à-vis agriculture products.

Financial Year	Agriculture Products		All Commodities	
	Unweighted average tariff (%)	Weighted average tariff (%)	Unweighted average tariff (%)	Weighted average tariff (%)
1995-96	21.79	5.43	22.32	17.01
1996-97	22.00	8.20	21.47	18.00
1997-98	20.83	7.59	20.70	16.06
1998-99	20.46	7.92	20.26	14.68
1999-00	17.19		16.76	

Source: National Board of Revenue, Bangladesh.

Until recently, there was no agricultural policy as such in Bangladesh. In April 1999 the Government introduced a National Agriculture Policy. The main objective of the policy, as written in the text, is to achieve self-sufficiency in food through increased production of all crops including cereals, and to ensure a dependable food security system for all of its citizens. In order to achieve this objective, the policy gives priority to crop diversification and production, development and expansion of irrigation facilities, pest management, agricultural research and extension and marketing and assurance of adequate and timely supply of quality seeds, fertilizer and agricultural credit.

Trade performance of Bangladesh agriculture

As a result of the export led growth strategy consistently pursued by the Government in recent years, export performance of the country has registered a noticeable improvement with an average growth rate of around 15% during the last five years. The ratio of export to GDP has also demonstrated a steady rise and stood at around 15% in FY 98-99. As a matter of fact, robust performance in exports of the manufacturing sector, more specifically the ready-made garment (RMG) sector, deserves credit for such growth rates. Agricultural commodities in primary form at present contribute around 8% to the country's total exports (down from 33.95% in FY 81-82). However, considering the fact that jute manufactures and leather are direct products of agricultural commodities, it would be appropriate to look at export performance of these products within the area of agriculture. In that case, the share of agriculture in total exports would be about 17%. Jute, tea and frozen food (especially shrimps) sectors in Bangladesh are basically oriented towards export. Nevertheless, the agriculture sector in Bangladesh, in general, is oriented towards the domestic market, which is evident from the ratio of agriculture exports to GDP (Figure 2). Besides jute and jute manufactures, frozen food, tea and leather, agro-products such as fish, shark fin, vegetables (including potato), betel leaves, tortoise and turtles, crabs, etc. are exported by Bangladesh. The major markets of these products are developed countries as well as the Middle East and South-East Asian countries and, in the case of raw jute, Pakistan, India and Brazil.

The major agricultural items of import of Bangladesh are rice, wheat, milk products, spices, oilseeds, edible oil, sugar, cotton, raw silk, pulses, vegetables and fruits. Bangladesh, as a net food importing country, is dependent on imports of food, Such high dependence on food imports, in particular during the time of natural disasters is cause for concern for the country, because even in normal times food imports of Bangladesh account for about 14% of her total

import. Major sources of imports of agricultural commodities by Bangladesh are developed countries, India, Argentina, Brazil, Poland and Russia.

It is worth noting here that thanks to significant progress in the export performance of Bangladesh, the ratio of exports to imports has risen sharply from 35.73% in FY 1981-82 to 68.40% in FY 1997-98. Furthermore, dependence on food aid has registered a substantial decrease in recent years. For example, food aid's share in total grain imports in FY 1998-99, which was a period when Bangladesh was afflicted by a most devastating flood (considered most prolonged in this century), was about 25.5%.

Figure 2 Ratio of total exports and agricultural exports to GDP in Bangladesh.

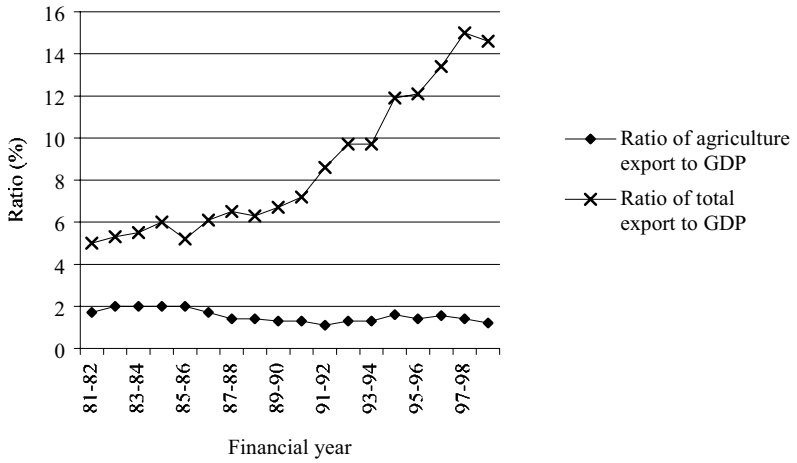

Source: Bangladesh Economic Review, 1999.

Impact of global trade liberalization on Bangladesh agriculture

Reduction commitments under the Agreement on Agriculture are expected to have significant implications on movements of world agricultural prices and global trade in agricultural products. Prices of products with increased market access and those currently receiving high subsidies are likely to rise. These products include rice, wheat, beef, vegetables, coarse grains, milk and milk products, sugar, fruit, vegetable oil, etc.

As a LDC, Bangladesh was not required to make any reduction commitments in the UR; however, she was required to bind tariffs on all agricultural products. Accordingly, Bangladesh bound tariffs on all agricultural products at a ceiling rate of 200% barring 13, which were bound at 50%. Bangladesh is required to tariffy all non-tariff measures imposed on agricultural products, except those permitted under other UR agreements. Bangladesh did not submit any schedule of export subsidy commitments and did submit a blank schedule of domestic support commitments. Consequently, as per UR provisions, Bangladesh is obliged (a) not to provide support to agricultural producers in excess of 10% of value of total production in case of both product specific and non-product specific supports, and (b) not to provide any export subsidies to agricultural products, except those permitted for developing countries.

In the context of possible effects of liberalization on the world agricultural market, the level of obligations required to be undertaken by Bangladesh, prevailing policy environment

and present trade performance, global trade liberalization is expected to have the following implications on Bangladesh's agriculture in the coming years:

- Firstly, reforms in both agriculture policy and trade policy, which were carried out by the Government since mid 1980s, go beyond those required by the AoA, except the quantitative restrictions maintained by the Government. However, justification for retaining these restrictions under the pretext of balance of payment requirements will need to be reviewed, if the Government desires to continue with such restrictions. Most of the domestic supports currently provided by the Government to agricultural producers in Bangladesh are consistent with the provisions of the AoA. Total AMS, as per recent estimation, does not exceed 3% of agro-GDP, which would mean that Bangladesh might provide addition supports to her agro-sector, if and when required.
- Secondly, substantial export opportunities of agricultural products arising out of increases in world market prices are expected to be generated. However, the scope for Bangladesh to take advantage of such opportunities is rather limited. The prices of most exportable agricultural products of Bangladesh are not expected to rise significantly as a result of trade liberalization. The only export products of Bangladesh that are likely to register price increases are vegetables and tobacco. Evidence suggests that in the recent past Bangladesh has indeed been able to take advantage of price increases of these products through increase of exports of these products both in terms of value and volume. Tariff reductions under the UR would certainly erode the preferences currently enjoyed by the country in developed countries under the various GSP schemes (Table 2) and are likely to have a negative impact on Bangladesh exports.
- Thirdly, Bangladesh as a net food importing country is heavily dependent on food imports. Global prices of major food items, which are important imports of Bangladesh, such as wheat, rice, pulses, milk products, etc, are likely to increase due to reduction of subsidies (increases in unit price of these products have also been observed in recent years). This will lead to a sizeable increase in the country's import burden, particularly in periods of natural disaster when the country is required to import such items in large amounts. Moreover, the recent decision pertaining to reduction of minimum annual contribution of cereals under the Food Aid Convention (1999) will also pose new challenges to the country. Nonetheless, increased import costs could be covered by better performance in export sectors, which has been consistently robust over the last decade.
- Fourthly, although crop production in Bangladesh is generally insensitive to global price movements, production as well as export quantity in case of vegetables and tea showed favourable trends in recent times, when there was a simultaneous increase in unit export price received for these products by Bangladesh. This implies that there might be a correlation between world price changes and supply response of Bangladeshi agricultural products.

Table 2 Pre-Uruguay and post-Uruguay tariff rates on selected Bangladesh products.

Country	Product	Pre-Uruguay Tariff (%)	Post-Uruguay Tariff (%)	Type of Tariff Applied on Bangladesh Exports Prior to UR
USA	Frozen food	0.0	0.0	MFN
	Jute manufactures	3.7	0.0	Preferential
	Leather	6.1	5.2	(not exported)
	Tobacco	8.1	3.7	(not exported)
European Union	Frozen food	14.0	12.0	Preferential
	Jute manufactures	6.1	1.6	Preferential
	Leather	7.5	5.2	Preferential
	Tobacco	22.6	16.9	Preferential
Japan	Frozen food	3.0	2.0	MFN
	Jute manufactures	15.8	6.7	Preferential
	Leather	15.4	13.9	Preferential
	Tobacco	0.0	0.0	(not exported)

Source: Review and assessment of proposal at tariff line level, table 12, GATT, 1994 and Market Access for Goods and Services, Overview of the Results, GATT, 1994

Conclusion

The role of agriculture, the most important and largest sector in Bangladesh's economy, is crucial for the country's food security, poverty alleviation and sustainable economic development. Despite the government's efforts to achieve self-sufficiency in crop production, population pressures together with natural disasters lead to strong dependence on food imports and make agriculture oriented towards the domestic market, except for jute, tea, and shrimps. Analysis shows that global trade liberalization is expected to increase the country's food import bill, particularly during the time of natural disasters and would erode the margin of preferences currently enjoyed by the country in developed countries under the various GSP schemes. Prices of agricultural commodities that are expected to rise due to trade liberalization would have minimal effect on the export of major exportable agricultural commodities of Bangladesh. However, evidence shows that opportunities for Bangladesh to take advantage of price increases exist. The Government needs to put in place appropriate fiscal, financial, and institutional incentives to promote the production and export of certain agricultural products. Export orientation of the agro-sector should be given high priority when export led growth strategy is central in the development agenda of Bangladesh. In fact, the Government has already taken up programmes for production and export of high value crops and development of the agro-processing industry.

Trade Liberalization of Agriculture in Cambodia

Srey Vuthy[*]

Introduction

Since the late 1960s, political instability caused by civil war has retarded the social and economic development process. The country's natural and productive base have suffered great losses. The greatest loss to Cambodia was the depletion of its human capital by mass genocide and large-scale exodus of the most educated citizens during 1975-1979, the years of Khmer Rouge Rule. In addition to the depletion of human capital, institutions were dismantled, the legal system destroyed and money abolished.

From early 1979 the Khmer Rouge Regime fell but the political situation continued to be delicate. At the 1991 Paris conference of Cambodia, an agreement on a comprehensive political settlement of Cambodia was signed. A general election was held in April to May and the new Royal Government was formed in September 1993.

In economic terms since the late 1980s, Cambodia has embarked on a transition to a market economy. Beginning in 1993, the new Royal Government has been committed to adopting democratic and fully free market economic policies.

The Royal Government has understood that agriculture is the main sector of social welfare and the national economy. The development of this sector is the key factor for the development of other sectors.

The Royal Government is committed to achieving a high rate of economic growth by way of a market economy. As the manager of development and rehabilitation of the economy, the Government is applying a strategy of working with the private sector as a full partner.

A significant feature of the shift from a command economy to a market economy is that a number of government institutions such as the Ministry of Agriculture ultimately have changed function within the agriculture sector. Services previously provided by the Government are now left to the private sector.

The new role of the Ministry of Agriculture is one of advising the national government on all policy issues affecting the sector, of generating new information as a result of research, of providing information to farmers, agro-businesses and communities and improving and developing laws and regulations adapting to free market conditions as well as respecting the benefits to producers, traders and consumers.

The place of the agricultural sector in the national economy and social welfare

Cambodia has a varied and productive natural base for agriculture, including a range of agro-climatic zones suited to a wide range of crops. Following two decades of conflict, Cambodia has achieved significant progress in stabilizing the economy, in restoring economic growth and in undertaking policy reforms to transform the economy into a market-oriented one. Progress has been especially rapid since the formation of the Royal Government in 1993. GDP increased at an average annual rate of about 6.5% during 1990-96. Total agricultural output increased by 2.6% per year while crop output rose by only 1.8%.

[*] Department of Planning, Statistics and International Cooperation, MAFF, Cambodia.

Agriculture is considered to be the main sector in the economy, sharing 42-45% of GDP, and it also plays an important role in food security for the population in the country (Table 1).

The agriculture sector including forestry and fisheries provides direct employment to more than three-fourths of the labor force. As 85% of the population live in rural communities and 75% of the poor are farmer-headed households, the key to sustained economic growth, poverty alleviation and development of the rural economy is through agriculture. In recent years, reforms have focused on moving state responsibility for production to market-based agriculture, resulting in the formal abandonment of collectivized agriculture and the redistribution of land based on private holdings with farmers given permanent rights to land use and inheritance.

Accompanying reforms have been price liberalization and the adoption of legislation to permit joint ventures between the state and foreign investors.

Current crop production and potential for development

Rice

Rice is the staple food of the Cambodian people and supplies about 75% of the calories consumed, the rest coming from fish, animal meat, maize, root crops, fruits and vegetables.

Efforts to increase rice production are achieving beneficial results with the 1995 production at 3.44 million metric tons, 1996 production at 3.45 million metric tons, 1997 production at 3.4 million metric tons, and 3.5 for 1998. This is due to the rehabilitation of small irrigation networks, improvements in distribution of agricultural inputs especially fertilizer, expanded access to urban markets, and expanded agricultural research and extension work. The introduction of new seeds, production techniques, more favorable seasonal conditions and increased fertilizer use contributed to the increase in output.

With these production figures Cambodia has been slightly above self-sufficiency from 1995 at a consumption rate of 152 kg of white rice per capita per year.

However, the estimated paddy yield is still about 1.7 metric tons/hectare in 1998, which is lower than neighboring countries. The target by the year 2003 is for an average yield of 2.0 metric tons/hectare. Rice yields in Cambodia will always be subject to variation due to the greater reliance of production systems on a seasonal monsoon weather regime in contrast to rice production based on irrigation. As such, the Government will maintain open access for rice exports and disseminate proven technology to improve crop practices and management of soil and water resources.

The current low yields and potential large increase in planted area suggest significant scope for growth in rice output. An increase in yield to the level of Thailand with an increase in planted area to the level of 1966/67 over a ten-year period would double rice production. This would allow Cambodia with its small population to regain its position as a regular exporter of rice and ensure food security.

Other crops

The production of other seasonal crops has slowly increased based on the local market demand and regional markets. The perennial crops have also been increased by farmers and investment companies. This indicates that farmers could absorb the technology transferred and also start to run agribusinesses.

Table 1 Contribution to GDP by sector, in billion riels.

Sector	1994			1995			1996			1997			1998 Estimate			1999 Forecast		
	Value (billion Riel)	Share GDP (%)	Annual change (%)	Value (billion Riel)	Share GDP (%)	Annual change (%)	Value (billion Riel)	Share GDP (%)	Annual change (%)	Value (billion Riel)	Share GDP (%)	Annual change (%)	Value (billion Riel)	Share GDP (%)	Annual change (%)	Value (billion Riel)	Share GDP (%)	Annual change (%)
Agriculture	**2,460**	**43.06%**	**0.5**	**3,131**	**43.49%**	**6.4**	**3,491**	**42.57%**	**2.3**	**3,880**	**42.64%**	**1.2**	**4,606**	**42.85%**	**1**	**5,283**	**43.41%**	**4.9**
Rice	797	13.00%	-11.8	1,033	1435%	18.8	1,129	1377%	02	1,188	1305%	-25	1,331	12.38%	-3	157.7	12.96%	7
Other crops	466	7.60%	-11.8	552	7.67%	12	635	7.74%	6.2	712	7.82%	3.8	848	7.89%	5	988	8.12%	6.1
Rubber	74	1.21%	15.4	79	1.10%	6.7	89	1.09%	6.2	112	1.23%	1.9	169	1.57%	3.8	191	1.57%	5.5
Livestock	675	11.01%	-2.6	797	11.07%	6.2	920	11.22%	7.4	1,043	11.46%	5.1	1,259	11.71%	4.9	1,454	11.95%	5
Fisheries	207	3.38%	4.4	242	3.36%	2.6	271	3.30%	-1	289	3.18%	-2	338	3.14%	-1.6	372	3.06%	0
Forestry	421	6.87%	91	428	5.94%	-24.5	447	5.45%	-6.5	536	5.89%	1	661	6.15%	-2.2	702	5.77%	-1.5
Industry	**997**	**16.26%**	**15**	**1,195**	**16.60%**	**10.1**	**1,510**	**18.41%**	**18.2**	**1,585**	**17.42%**	**-2.9**	**1,840**	**17.12%**	**0.2**	**2,027**	**16.66%**	**1.9**
Mining & quarrying	106	1.73%	14.3	127	1.76%	7.3	161	1.96%	19.4	164	1.80%	-5.7	187	1.74%	-0.8	202	1.66%	-1.7
Manufacturing	356	5.81%	14.8	406	5.64%	8.3	488	5.95%	12.7	579	6.36%	7.8	739	6.87%	6.7	849	6.98%	7.2
Electricity & water	44	0.72%	17.2	51	0.71%	12.2	65	0.79%	21.7	79	0.87%	16	97	0.90%	13.8	118	0.97%	16
Construction	491	8.01%	14.6	612	8.50%	11.9	797	9.72%	21.8	762	8.37%	-11.3	817	7.60%	-6.8	858	7.05%	-4.6
Services	**2,494**	**40.68%**	**11.6**	**2,874**	**39.92%**	**8**	**3,249**	**39.62%**	**7.3**	**3,636**	**39.96%**	**2.5**	**4,304**	**40.04%**	**-1**	**4,861**	**39.94%**	**4**
Transport & communication	393	6.41%	8.2	444	6.17%	8.4	524	6.39%	10.4	616	6.77%	5.2	792	7.37%	5.2	850	6.98%	5.5
Wholesale & retail trade	779	71.71%	18.1	914	12.69%	10.3	1,048	12.78%	9.2	1,167	12.82%	2.8	1,366	12.71%	-6	1,571	12.91%	3.8
Hotels, restaurants & tourism	113	1.84%	45.6	140	1.94%	17.4	183	2.23%	19.3	200	2.20%	-2.5	218	2.03%	-5.7	259	2.13%	11.5
Banking, insurance & real estate admin.	50	0.82%	26.2	56	0.78%	7.5	63	0.77%	5.3	71	0.78%	0.05	80	0.74%	3.2	91	0.75%	4.6
Education & health	307	5.01%	14	365	5.07%	7.9	361	4.40%	-1.6	402	4.42%	0.8	464	4.32%	-4.5	508	4.17%	0.9
Home ownership	369	6.02%	2.8	408	5.67%	4	460	5.61%	5.9	508	5.58%	2.2	596	5.54%	1.9	679	5.58%	3.5
Other services	483	7.88%	4	547	7.60%	5.2	610	7.44%	4.1	671	7.37%	1.9	787	7.32%	2	903	7.42%	3.6
Real GDP (at current prices)	**6,131**	**100%**	**4**	**7,200**	**100%**	**7.6**	**8,200**	**100%**	**7**	**9,100**	**100%**	**1**	**10,750**	**100%**	**0**	**12,170**	**100%**	**4**

Source: Ministry of Economy and Finance.

The cultivated area of non-rice seasonal crops in 1998/99 is only about 160,000 hectares compared to 250,000 hectares in 1966/67. Total production of maize in 1997 was 42,423 metric tons and 48,510 metric tons in 1998. Mungbean production was about 15,300 metric tons in 1997 and dropped down to be 9,160 metric tons in 1998. Soybean was about 28,300 metric tons in 1996, 56,300 metric tons in 1997 and 27,700 metric tons in 1998. Peanut production was 6,160 metric tons in 1996, 6,950 metric tons in 1997 and 6,610 metric tons in 1998 (Table 2).

The yield of crops is generally very low compared to average yields in other countries of the region, while product quality is also low compared to the standard of market demand. These crops need to be rehabilitated and there is still great potential for development.

Agricultural export

In the 1990s there has been a dramatic shift in established trading patterns. Between 1979 and 1990, external trade was almost exclusively conducted with the former Soviet Union and other members of the now defunct Council for Mutual Economy Assistance (CMEA). Trade was conducted by State Trading Companies on a barter basis, with Cambodia supplying natural rubber, timber and grains in exchange for fuel, fertilizer and manufactured goods.

Since 1991 Cambodia's main trading partner has been Asia, with Singapore, Viet Nam, Thailand and Malaysia playing major roles. Now the Cambodian agricultural export sector forms a part of the Southeast Asian regional market. Developments in the sub-regional market will have a strong bearing on Cambodia's agricultural exports, even though its value is rather small and quality is still low. Maize, soybean, mungbean, sesame and tobacco are exported both officially and unofficially. Paddy rice is mostly exported illegally (Tables 3 and 4).

Considering actual export destinations and the future outlook for international agricultural trade in Asia and the World, an attempt has been made to identify potential markets for Cambodian products. Cambodia faces a serious challenge in creating markets for its agriculture crops. However, a considerable informal cross border trade is reported with Thailand and Viet Nam. Moreover, Cambodia has to compete with more efficient producing countries that are well established in the international market.

Problems encountered

In order to increase food production in a sustainable way, as well as production of other agricultural commodities, including forestry and fisheries, it is proposed that advanced technology be applied for production and also consideration be given to environmental conservation.

The Royal Government and the Ministry of Agriculture, Forestry and Fisheries are paying attention to added value of products and the prospect of increasing employment opportunities for the people by promoting agro-industries. To have the capacity to compete in regional and world markets, Cambodia needs to improve the quality of products and to reform business management systems, laws and regulations smoothly, fairly, transparently to adapt to free market conditions.

To achieve these objectives, we are faced with many problems such as:

- The country has very poor water management infrastructure. Natural calamities are frequent (flood, drought, damage by insects, etc.);
- The national budget is limited to implement development projects and programs;
- Human resources are limited and have inappropriate skills;

Table 2 Crop production, 1991-1998.

Crop	Unit	1991	1992	1993	1994	1995	1996	1997	1998
Rice									
Harvested area	ha	1,719,000	1,685,380	1,823,625	1,494,600	1,924,041	1,879,000	1,928,689	1,962,566
Production	tons	2,400,000	2,221,000	2,383,350	2,223,480	3,447,827	3,458,000	3,414,918	3,509,871
Maize									
Harvested area	ha	50,000	48,000	42,913	37,000	45,035	46,988	34,138	39,857
Production	tons	60,000	60,000	45,415	45,000	54,900	64,255	42,423	48,510
Cassava									
Harvested area	ha	11,000	16,000	9,800	10,000	12,410	13,000	10,056	8,792
Production	tons	56,000	150,000	51,292	65,000	81,950	69,656	77,266	66,534
Sweet potato									
Harvested area	ha	8,600	9,500	8,152	10,000	9,400	10,000	9,144	9,008
Production	tons	39,000	60,000	48,010	36,000	39,140	38,032	28,922	30,476
Vegetables									
Harvested area	ha	26,800	24,900	29,008	34,000	39,200	41,886	42,900	36,940
Production	tons	-	-	226,630	197,000	193,010	249,710	250,000	217,258
Mungbean									
Harvested area	ha	27,000	24,000	208,225	26,000	25,150	26,756	27,417	16,463
Production	tons	13,000	14,000	10,887	17,000	19,550	13,758	15,312	9,160
Sugarcane									
Harvested area	ha	6,000	6,000	6,473	7,000	7,420	7,022	8,035	6,933
Production	tons	145,000	142,000	145,378	219,000	202,490	171,305	187,542	133,053
Soybean									
Harvested area	ha	14,000	15,800	14,300	22,000	16,150	16,738	32,881	30,975
Production	tons	35,000	40,000	12,865	23,000	17,240	28,299	56,342	27,709
Peanut									
Harvested area	ha	7,000	7,000	7,075	7,000	9,000	11,243	9,502	9,605
Production	tons	4,000	4,000	4,889	5,000	6,750	6,166	6,956	6,612
Sesame									
Harvested area	ha	16,000	13,000	10,203	9,000	8,295	11,690	15,898	9,435
Production	tons	8,000	6,000	4,773	4,000	3,756	5,245	6,500	5,087
Tobacco									
Harvested area	ha	17,400	17,500	8,790	14,000	13,380	11,850	14,944	13,761
Production	tons	8,800	8,900	4,980	12,000	11,079	9,620	10,493	10,144
Jute									
Harvested area	ha	1,400	1,900	2,345	1,800	915	1,700	1,950	1,021
Production	tons	1,300	1,500	2,304	1,900	952	2,398	2,329	1,104

Table 3 Volume of export of agricultural commodities: 1991 to 1998.

Items	Unit	1991	1992	1993	1994	1995	1996	1997	1998
1. Rice	mt	-	-	-	-	-	5,625	1,555	784
2. Rubber	mt	33,548	27,662	13,616	6,090	25,046	47,844	25,205	-
3. Soybean	mt	55,580	9,740	53	n.a.	n.a.	400	680	2,530
4. Mungbean	mt	3,150	n.a.	n.a.	n.a.	n.a.	n.a.	n.a.	n.a.
5. Maize	mt	30,757	6,690	n.a.	n.a.	8,065	3,627	2,247	n.a.
6. Tobacco	mt	1,500	100	n.a.	n.a.	240	210	65	n.a.
7. Sesame	mt	n.a.	n.a.	n.a.	n.a.	285	2,386	n.a.	n.a.
8. Kapok	mt	144	206	57	n.a.	n.a.	n.a.	n.a.	n.a.
9. Timber	m3	259,800	110,000	128,500	n.a.	n.a.	n.a.	147,700	53,400
10. Pepper & chili	mt	30	n.a.	n.a.	n.a.	n.a.	n.a.	8.22	251
11. Fishery products	mt	432	4,197	3,354	3,497	6,185	4,110	5,045	6,367

Table 4 Value of export of agricultural commodities: 1991 to 1998.

Items	Unit	1991	1992	1993	1994	1995	1996	1997	1998
1. Rice	US$ million	-	-	-	-	-	1.3	0.92	0.19
2. Rubber	US$ million	18.7	12.6	11.7	30	32	32.3	15.2	-
3. Soybean	US$ million	9.9	2.1	0.4	0.6	0.1	0.1	0.39	0.15
4. Mungbean	US$ million	0.8	n.a.	n.a.	n.a.	n.a.	n.a.	n.a.	n.a.
5. Maize	US$ million	2.3	0.6	0.5	0.4	1	0.6	0.21	n.a.
6. Tobacco	US$ million	2.2	0.2	n.a.	0.2	0.2	0.2	0.06	n.a.
7. Sesame	US$ million	1.2	0.2	0.1	0.2	0.1	1.1	n.a.	n.a.
8. Kapok	US$ million	0.1	0.2	0.1	1.1	n.a.	n.a.	n.a.	n.a.
9. Timber	US$ million	24.6	25.1	24.6	n.a.	n.a.	n.a.	10.1	6.28
10. Pepper & chili	US$ million	n.a.	n.a.	n.a.	n.a.	n.a.	n.a.	0.05	0.12

Source: Department of Foreign Trade (MOC), Customs Department (MEF) & Department of Fisheries.

- Transfer of advanced technology to farmers is still limited, due to lack of means and budget constraints;
- Government staff are inefficient, because of very low salary;
- Regulations and legislation are inefficient or nonexistent;
- The communication infrastructure is very poor;
- There is poor market infrastructure and in domestic markets agricultural products compete with imported products;
- There is a lack of market intelligence, particularly export crop market intelligence.

Government policy for agricultural development

To maximize agricultural output, this sector needs to rapidly complete the transformation to a market-based system and minimize structural constraints such as inadequate transport infrastructure and weak control over water resources, etc. Sustained increases in productivity are possible because of the high potentials in crop production yield using technology and capital.

The Government is ensuring that the shift to market-driven agriculture is not put at risk because of the lack of capacity of the rural populace to participate in the transition. The Government will continue these priorities in the medium term through crosscutting collaborative actions such as participation in poverty alleviation initiatives and conformity with the National Environmental Action Plan. Over the medium term, the Government will:

- Improve food security through expansion in the production of rice and other food crops and by promoting the establishment and expansion of competitive agriculture markets.
- Contribute to foreign exchange earnings through export growth and by developing commercial agriculture and agribusiness for exports.
- Increase income opportunities for farm households by diversifying crop production particularly farms headed by women, and by developing strengthened and restructured sector institutions through capacity building and privatization.
- Build on existing reforms and focus on the most pressing constraints in order to improve the efficiency and timing of transition actions and provide a consistent facilitating role to encourage the emergence of competitive markets.
- Accelerate the privatization program and support the development of a finance sector for servicing agriculture needs.
- Strengthen the participation of rural communities in sector program design and implementation through decentralization of needs assessments, planning and decision-making authority.
- Improve the management of natural resources by maintaining environmental management functions.

In addition, current structural reforms are intended to achieve a competitive market-based sectoral approach which includes: improving social stability in the rural areas, enhancing farmers' access to markets and market information; increasing farmers' access to inputs, technical advice and management expertise; enhancing rural population access to credit and finance; and promoting the most efficient use of budget resources in rural areas

Priority is now placed on rapid mine-clearance of agricultural lands, enhanced water control irrigation systems, increased access to and use of better agricultural inputs (seeds, fertilizers, pesticides), as well as expanded access to both internal and external markets. Resources are also required to build MAFF capacity to adequately plan land use and implement methods to avoid environmental degradation.

Government assistance

Rice seed, 3,000-4,000 metric tons per year, has been lent to farmers without any interest based on rice-seed bank principles. Fuel, about 1 to 2 million liters per year, for pumping water into the main canals and for some emergency cases in certain areas was provided by the Government to help farmers. Irrigation water is freely supplied to farmers. Pesticides were supplied through the Department of Agronomy of MAFF for intervention activities upon the request of the farmers.

Trade liberalization measures affecting production

Farm price policies

- The Royal Government of Cambodia has been trying to institute policy actions and development programs to promote increases in farm production, agribusiness and income. Due to national budget constraints, the Government has removed the guaranteed procurement prices or support prices for all cereals as a major change from a centrally-controlled economy to a free market economy in the early 1990s.
- Government intervention, in urgent procurement of rice and seed to alleviate some rural shortages or in calamities, has been made occasionally based on free market prices. However some subsidies have been provided to farmers through fixed price on inputs. No restrictions from Government have affected farm prices or wholesale prices. The farmers and traders have the right to sell their products anywhere at any price.

Marketing policies

- There are limits on quantities of cereal procured by the private sector. The Government has no restrictions on inter-regional movement of cereal. The main obstacles to more efficient trade and marketing are the poor condition of roads and security problems in some areas and the additional costs of transport due to illegal road fees.
- The Government is trying to encourage private sector participation in domestic marketing of cereals.
- Marketing infrastructure development, including rural road and national road schemes and also improvement of the retail urban and provincial market places are proposed.
- Promotion of trade and export, including liberalization and market-oriented trade, uniform tariffs, no bans nor quotas: The Government encourages the development of small and medium enterprises and export-oriented large industries; enhances trade liberalization and the integration of regional and global trade; and promotes Cambodia as a good producer in order to attract more foreign investment.
- Financing, credit structure for marketing: Marketing credit is required by producers and market intermediaries-collectors, wholesalers, retailers, etc. while moving produce through the marketing channels. The Government is trying to maintain competition in the financial system and is providing a framework for the establishment of a privately-

dominated rural banking system. The Rural Development Bank, a public administrative establishment based in Phnom Penh, was also established in 1997 to absorb external loans for rural community development. This activity is mainly carried out through local and international NGOs to give loans to farmers. The Government is also encouraging the establishment of rural saving mobilization mechanisms, including saving clubs and loan associations.

Stockholding policies

There are figures for private sector stockholding for cereals. The Government of Cambodia has adapted laws, rules and procedures in order to better integrate the Cambodian economy into the global economy and particularly to fulfil all conditions as a qualified member of ASEAN. Therefore, the Government yearly procures 5,000 metric tones of rice, as required by ASEAN conditions, for public stocks used for strategic food security and intervention purposes to the rural poor during natural calamities.

Institutional reform

Reform of COCMA

The Government has reformed the state-owned COCMA (Central Company for Agricultural Materials) as the Agricultural Input Company (AIC), a public administrative establishment. The private sector's movement on fertilizer, pesticides, etc. is still a free market operation and without restrictions from the Government. Fertilizer as well as other agricultural inputs is not taxed. All the imported fertilizer requires quality analysis, which is conducted by MAFF.

It is estimated that about 20% of the fertilizer is supplied by the Government and 80% by the private sector. The price of fertilizer supplied by the Government was fixed mainly based on the market price.

Reform of KAMPRIMEX

During the 1980s, the state-owned enterprise KAMPRIMEX (Food Company of Kampuchea) procured food grains from farmers at set producer prices and distributed it to target groups such as government service personnel, army and security forces.

In 1995, a ban on exporting of rice was removed. KAMPRIMEX continued involvement in rice imports and distribution of food aid.

KAMPEXIM (Kampuchea Export & Import Company) which was previously involved in import and export, has been fully privatized as were other state-owned enterprises involved in the collection of agricultural products. AGREXPORT and Material & Equipment Company have also been reformed.

KAMPRIMEX, AGREXPORT and Material & Equipment Company have been reformed into the GREEN TRADE Company, a public enterprise, since November 1998.

Trade policies and liberalization

Export policies

There are very few quantitative export restrictions pertaining to exports of rice and timber. Prohibitions imposed on exports of agricultural products concern round logs and unprocessed timber. Export licensing procedures cover a few products, namely rice and timber.

The main export commodities from this sector are rubber, soybean, maize, mungbean and fish products. Paddy rice is also exported during harvesting periods and imported during shortage from/to neighboring countries.

Import policies

There is no restriction on import of cereals into Cambodia, but international trade in cereals is registered at the Ministry of Commerce. Tariff quotas are not applied and there are no quantitative restrictions on imports into Cambodia. Import licensing requirements cover a small number of products.

The Government signed an agreement with SGS in 1995, under which all pre-shipment inspections are conducted by SGS for formalities on imports. CAMCONTROL, an inspection body under the Ministry of Commerce, is responsible for exports. Goods for import require an import declaration form and other related documents.

Impact of trade liberalization

Institutional arrangement

We have accepted the policies of liberalization and privatization in Cambodia since this idea also clearly specified in the Royal Government's Statement to turn the Cambodian economy into a market-oriented economy, but Cambodia is still in the period of transition, so the process of overall privatization and liberalization will be made gradually.

It is recognized that as a result of privatization and liberalization the role of the government has had to undergo changes. Instead of carrying out activities such as target setting, production planning and price setting, the Government developed its activities to support services for producers and the private sector. Government institutions have changed their functions to adapt liberalization and privatization and during this process we need time to improve these institutions including administration, management and financial support.

During the transitional period, the public sector had to reduce its capacity to respond to local food or input shortage, but the private sector had not developed fast enough to replace the public distribution system.

Unemployment

Privatization of public enterprises leads to retrenchment of labor and officials. Although temporary in nature, this problem will have serious a effect on the privatization program itself. It is clear from experience that the success of any privatization program depends crucially on mitigation plans to alleviate such unemployment.

Limitation of human resources

While the responsibility of existing government staff is changing in adapting to market conditions, many constraints have been found in human resource development. General issues that have been identified include i) too many employees in government service in relation to the work requirement; ii) insufficient financial resources to pay civil servants adequately; iii) limited capacity for policy analysis, for planning and managing of government works, and iv) poor technical and management skills.

During the 1980s, government policies and activities were designed for a command economy but after that they shifted to adapt to a free market. The human resource capabilities of

the civil service need improvement. On-the-job training programs are needed for the existing government staff.

Liberalization is a means and not an end. Achieving the desired result requires efficient management and effective implementation of the program. Switching over from one system of economy to another or from a completely state-owned and inward-looking economy to a liberalized free market one is a difficult situation to manage especially in the transition period. The design of reform should be directed towards improving management and administrative efficiency. Lack of management skills and administrative inefficiencies are noted to be the obvious major constraints to the implementation of plans and programs of the economic reforms.

Inadequacy of law and regulations

Since the government adopted the policy of market liberalization and privatization, related laws, rules and regulations have been amended, formulated and implemented, but these are still found to be lacking and inadequate. These laws and regulations are essential to provide incentives to private traders as well as to protect consumers from exploitation.

Experience has shown that a negative effect of liberalization and the privatization policy was environmental pollution, due to slow response of law and regulations. The aspiration and motivation of a private company or individual may not coincide with that of the government. A private trader's main objective is to maximize profit and he will care less about negative effects, like pollution, which ultimately have to be borne by the society as a whole.

Inadequacy of institutions in the private sector

It is recognized that there is a need to establish institutions in the private sector. At the present, Phnom Penh Chamber of Commerce, and Rice Mill Associations in two provinces (Battambang and Banteay Meanchey) have been established. However, other institutions such as export-import associations, rice exporter associations, consumer forum, etc. still need to be established to serve the interests of private traders and consumers.

On the other hand, the activities of some established institutions such as the Rice Mill Associations are still weak and will need to be strengthened through training and advisory programs.

Inflation

During the reform program, consumer prices have gone up since 1990 and stabilized in 1994. Wage subsidies are given to compensate for this price inflation.

Effect on vulnerable people

Before liberalization, we had some programs to assist the vulnerable segment of society. These people lack accessibility both in economic and physical terms. Under such programs a subsidy is normally involved for these areas and for people. Since the liberalization policy calls for withdrawal of subsidy on food distribution, it is very natural that this segment of the population will be hard hit.

Conclusions

A central policy to be pursued by the Royal Government within agriculture is that of crop diversification through both annual and perennial crops. Although the overwhelming

proportion of the total cultivated area in Cambodia is rice, the potential for other crops, particularly coarse grains, root and tuber crops, is considerable. Recent estimates indicate that while returns to labor were as low as 0.64 USD per person/day in traditional rain-fed lowland rice production, more than double this return was obtained in production of vegetables, soybean, mungbean, cassava and sweet potato and about double in the case of maize and groundnut.

There is, however, great potential for cultivated area extension and yield increases and regional demand is strong, with neighboring countries importing from Cambodia. The development of appropriate varieties and technologies of cultivation and methods of post harvest, grading, packaging and storage will be necessary.

Among the above commodities, maize, mungbean and soybeans have already come to make valuable export contributions.

Every effort will be made to encourage the development of agribusiness, that is, more commercial operations concerning crops, particularly coarse grains, roots and tubers, processing or trade. Such operations will be in a good position to capture opportunities which emerge in expanding urban markets and for export.

In general, the market liberalization program in developing countries involves withdrawal of subsidies, removal of support pricing policy, privatization of agricultural trade through removal of trade barriers and liberalization of external trade through a flexible exchange rate, etc. In the case of Cambodia, this process seems to be fully operating. Government intervention has also been reduced gradually since the early 1990s, but some problems or negative effects of liberalization have occurred as stated earlier. We need some more time to solve these problems and then prepare ourselves to accomplish these programs as well.

The main philosophy behind liberalization is to create a competitive environment where prices play an important role in the allocation of inputs and outputs leading to optimum efficiency in production and distribution in the economy. It is essential that all laws, rules and regulations relating to liberalization and privatization be improved and amended.

In order to encourage the private sector's participation, the government should also provide market infrastructure through improvement in farm-to-market roads, communication facilities and other services and facilities where the private sector will not invest. In addition, government should also encourage and support the private sector in setting up or improving storage, milling, transport and other facilities.

The need is recognized for training both in input and output marketing, trading, administration and management for the public and the private sector in adapting to the free market situation.

Cambodia has already formed some institutions in the private sector such as Phnom Penh Chamber of Commerce, and Rice Miller Associations in two north-west provinces, but these are still inadequate. For this reason, the government should encourage and also support private traders to establish export-import associations, a consumer forum, rice exporter associations, etc.

Two newly established public units in the Ministry of Agriculture, Forestry and Fisheries responsible for agricultural marketing, market information service and extension and the Export Promotion Department in the Ministry of Commerce should have their capacities to assist the private sector strengthened. Expertise, and technical and financial support for these two units should be provided.

Effects of Trade Liberalization on Agriculture in Lao PDR

Khamxay Sipaseuth[*]

Agricultural production in Lao PDR including forestry accounts for more than 50% of GDP and provides employment for about 85% of the labor force. Agriculture and forestry account for about 40% of official export earnings. Food crop production is characterized by very low use of modern inputs and its productivity is amongst the lowest in the world. Production is oriented towards rice production for family units with only a small amount of rice (10%) marketed. This subsistence orientation is being reinforced by government policies aimed at self-sufficiency in rice production. The rate of growth in the sector has been declining and both growth and foreign investment are well below that in the manufacturing and services sectors of the economy. Nevertheless, agricultural growth is critical to the country's overall economic performance. Poverty is a significant issue in rural areas and its elimination is also a major focus of Government policy.

Existing policies affecting competitiveness in the agricultural sector

The socio-economic development plan

The Government intends that national development will take place within eight national priority programs, which are outlined in the Socio-Economic Development Plan. They are: food production; stabilization and reduction of shifting cultivation; commercial production; infrastructure development; improved socio-economic management and foreign economic relations; rural development; and development.

The Ministry of Agriculture and Forestry has interests in all these programs - perhaps with less emphasis on national infrastructure development and national services development and projects implemented in the Ministry are likely to contribute to more than one program. Projects in some of these programs, for example in rural development, may require inputs from other ministries in the Government. Conversely, projects in the Ministry may interact with and contribute to projects under other ministries and agencies.

The 'Agriculture and Forestry Sector Development Plan to the Year 2000' presents six programs, which are being implemented through specific plans, projects and activities. They are:

- Food production program: To achieve food self-sufficiency, in terms of improving quantity, quality and availability of food. Specific targets for rice, maize, root crops, meat and fish are given. The program is to be achieved through intensification of production on six plains, and expansion of cultivated areas for paddy in mountain valleys where water is available. Numerous material inputs are required, as well as improved management systems. The program also depends on integrated pest management, markets, credit, extension, pricing systems and many other factors.

[*] Ministry of Agriculture and Forestry, Department of Agriculture, Vientiane, Lao PDR.

- Commodity production support program: Develop the agro-processing sector to provide local income opportunities and increase value added. Rice, maize, soybeans, mungbeans, peanuts, vegetables, sugarcane, tobacco, cotton, coffee, fruits and meat are mentioned.
- Stabilization of slash-and-burn cultivation: The target is to be stabilize 100,000 families, who will be encouraged to take up alternative on-farm and off-farm economic activities such as improved agro-forestry, animal husbandry, food and cash crop production in the mountain plains, wage labor in agro-processing and trading. Credit and other forms of government assistance in land development and management will be required.
- Irrigation development schemes: To increase rural incomes and stabilize rice availability by expanding irrigated areas for both wet and dry season production, and to improve the operation and maintenance of existing irrigation schemes. Credit will be needed and joint Government-community work on irrigation infrastructure and operations.
- Agriculture and forestry research program: To conduct resource surveys, prepare master plans for development (especially in the Northern Province), to rehabilitate existing research stations and expand research activities to new areas, and to cooperate with international research institutions.
- Human resources development program: To upgrade the technical and political skills of MAF staff, and to develop an effective extension service at the provincial and district levels.

The above considerations are linked to the National Action Plan for Nutrition, which includes several activities to improve household food security:

- Assist model farmers for diversified food production
- Stabilize slash and burn production
- Develop household gardening and fruit production, and community food processing and preservation skills
- Increase household and community poultry and fish production
- Reduction post harvest losses, especially for rice
- Provide water for domestic consumption and community irrigation
- Upgrade women's capabilities in food production, gardening, food preparation and food conservation
- Strengthen local mechanisms for cropping with food insecurity by improving storage facilities and food banks
- Establish a food security information system to assess, monitor and evaluate household food security and nutrition
- Control micro-nutrient deficiencies and improve nutritional balances. Link these to health, sanitation, and breast-feeding information campaigns and education of women and children in health, nutrition and hygiene.

Impact of AFTA accession on the sector

The impact of accession will be felt in two related ways, firstly through any tariff cuts and market opening resulting from the Common Effective Preferential Tariff (CEPT) scheme and secondly from the increased attention AFTA is likely to bring to trade matters in general.

Tariff reductions

Implementation of the CEPT scheme, which establishes a preferential trade arrangement among ASEAN economies, is based on four product lists.

- The Inclusion List contains products subjected to tariff adjustments immediately to bring them into the range 0-5% by the year 2003 (normal track or 2000 fast track): NTBs have to be eliminated within five years of inclusion. QRs are to be eliminated immediately on inclusion. Foreign exchange restrictions and customs surcharges are also to be eliminated.
- The Temporary Exclusion List includes items temporarily excluded from tariff reductions. For Lao PDR, items on this List are to be included on the Inclusion List between 2001 and 2006. Items moved to the List at the latest time (1 January 2006) will have two years for their rate to be reduced to 5%.
- The Sensitive List relates to unprocessed agricultural products. These may be moved to Inclusion List at any time within a seventeen year period beginning in 1998.
- The General Exemption List contains items permanently excluded from tariff reductions on national security, moral and other similar grounds.

Associated tariff cuts proposed by Lao PDR in the current AFTA lists are based on a narrow list of items and will take too long to implement. Most agricultural commodities have been excluded from tariff reductions for eight years (for those on the Temporary Exclusion List) to seventeen years (for those on the Sensitive List) even where there are very low existing rates and no significant production in Lao PDR. Many inputs into agricultural production have been similarly excluded.

In the short to medium term the impact of AFTA on the agricultural sector is likely to be small. Policies and activities on self-sufficiency, regulation of trade, rural development, product diversification and the cost of inputs are likely to be more significant factors affecting the competitiveness of Lao PDR agriculture than tariffs alone. There are few agricultural items on the Inclusion List. Those that are on the List (eg wool, hops, sugarbeet) are either inputs into locally produced products or simply unlikely to be traded. The levels of tariff are also already low (5%). Almost all agricultural items appear on the Temporary Exclusion List or the Sensitive List. This means that these items are 'temporarily' not subject to any form of tariff reduction. Tariffs affecting major agricultural products of Lao PDR and tariff commitments of ASEAN trading partners are presented in Tables 1 and 2.

Table 1 Tariffs affecting major agricultural items produced by Lao PDR.

Item of Domestic Production	Production ('000 tons) in 1996	Lao PDR tariff (%)
Rice	1,400	6 S
Maize	76	5 E
Starchy roots	93	40 E
Vegetables	89	40 S
Soybean	2.3	20 E
Peanut	11.9	30 S
Tobacco	26	10 S (cigarettes GE)
Cotton	6.8	20 (5 for further processing)
Sugar	87 (cane)	10 E
Coffee	10	40 E
Buffaloes	1,136,000 head	
Cattle	1,070,000 head	5 - 10
Pigs	1,556,000 head	5 - 10
Poultry	9,455,000 head	10 S
Timber (logs)	819,700 cm^3	

Source: Basic Statistics about Socio-Economic Development in Lao PDR. State Planning Committee 1997.
I = Inclusion List; E = Temporary Exclusion List; S = Sensitive List; GE =General Exemption List.

Table 2 AFTA Tariff commitments of ASEAN trading partners.

		Laos		Thailand			Viet Nam			Malaysia			Indonesia		
HS Code	Description	Tariffs	Status	B. Rate	1996	2003	B. Rate	1996	2003	B. Rates	1996	2003	B. Rates	1996	2003
0.102	Live bovine animals	5-10	S	0-5	0-5	0-5		G		0	0	0	0	0	0
0401	Milk and cream	5	S	40	25	5				0-6	0	0	25		
0402	Milk and cream - sweetened	5	S	2.5-30	2.5-25	5				0	0	0	5-25		
0407	Birds' eggs - in shell, preserved or cooked	30	S	0-30	0-25	0-5				62(S)	0	0	0-20	0-10	0-5
0701	Potatoes - fresh or chilled (seeds and other)	5-40	T	30						0	0	0	0-20	0-10	0-5
0702	Tomatoes - fresh or chilled	40	S	30	25	5				0	0	0	25	10	5
0703.1	Onions and shallots	40	S	30	25	5				0	0	0	5	2.5-5	2.5-5
0704	Cabbages, cauliflowers, broccoli; and other edible brassicas	40	S	30	25	5				0	0	0	25	20	5
0707	Cucumbers and gherkins - fresh or chilled	40	S	30	25	5				0	0	0	20-25	20	5
0708	Leguminous veg. (peas, beans, etc) - fresh or chilled	40	S	30	25	5				0	0	0	25	20	5
0708.2	Beans (Vigna spp., Phaseolus spp.)	40	S	30	25	5				0	0	0	25	20	5
0709	Other vegetables – fresh or chilled	40	S	30	25	5				0	0	0	25	20	5
0714. 1	Manioc (Cassava)	40	T	30	25	5				2.5	0	0	20-25	20	5
0714. 2	Sweet potatoes	40	T	30	25	5				2.5	0	0	25		
717.9	Other edible roots and tubers with high starch or inulin	40	T	-	-	-				0	0	0	25	20	5
0801.30	Nuts - coconuts	30	S	30-45	25	5				12	0	0	5-25	5	5
0801.30	Nuts - cashew	30	T	60	25	5				0	0	0	25		
0802	Other nuts	30	S	30-45	25	5				0	0	0	5	5	5
0807	Melons and pawpaws	40	S	60	25	5				54	0	0	25		
0901	Coffee, coffee husk and skin, etc.	40	T	40	25	5				076.28	0	0	0-25	0-20	0-5
0908	Nutmeg, mace and cardamoms	20	t	15	10	5				0	0	0	25	10	5
1201	Soybeans - whether or nor broken	20	T	6-35	5-25	5				0	0	0	0-25	2.5	2.5
1202	Nuts-ground, not roasted or otherwise cooked, not/shelled	20	S	17-30	15-25	5				5	0	0	25	10-20	5
1703	Cane or beet sugar and chemically pure sucrose, in solid from	10	T	-	-	-				0	0	0		S	
1701.11	Cane sugar	10	T	3.5	15	5		E		0	0	0		E	
1701.12	Beet sugar, other	10	T	3.5	15	5		E		0	0	0		S	
1701.91	Containing added flavouring or colouring matters	10	T	65	25	5		E		0	0	0			
1702	Other forms of sweetener (lactose, syrup, glucose, etc.)	10	T							0	0	0	5-25		
2401.3	Unmanufactured tobacco, tobacco refuse	10	S	60	25	5							10	5	5
5201	Cotton - not carded or combed	20	T	3.5	3.75	3.75	0	0	0	0	0	0	0	0	0

Source: AFTA Tariff Database.
S = Sensitive List; T = Temporary Exclusion List.

Other impacts

In the longer term, AFTA is likely to have a significant effect on agriculture. The impact will not be from AFTA alone, but from the combination of AFTA membership and the Government's current policy of encouraging market-oriented agricultural production. AFTA will act as a window for the World to see clearly the real content of Lao PDR's agricultural policies and potential. A continuation of tariffs and other restrictions on agricultural imports in the longer term is not consistent with 'market orientation' and, as global barriers to agricultural trade are removed, Lao PDR will be subject to a variety of international pressures to do the same. Investors looking to lock in short term gains may take advantage of the tariff to do so but long term investment will follow an assessment of the overall advantages of investing or not. This will depend on many things apart from the tariff level, but high tariffs on raw materials for processing will discourage an export-oriented processing industry from developing without special assistance. They may encourage small domestic market-based processing, but at the cost of higher than necessary prices to domestic consumers and processors.

Entry into AFTA will raise even more fundamental questions and debate about the purpose of tariffs: who they really benefit, their net cost or benefit to the agricultural sector and their importance to the trading environment compared with other aspects of government operation and policy. For Lao PDR, which is attempting to move its agricultural economy from subsistence to market oriented, tariffs can represent a considerable distortion of the market and may result in activities being developed in Lao PDR which are not market oriented. There are high economic costs for the community as a whole associated with having tariffs encourage certain activities instead of others. The mis-allocation of resources means that the country is not making the most of its limited resources. For example to encourage high cost rice production through restrictions on rice imports (not just tariffs in this case), when the same land might be used more profitably for high value cash crops, is denying the farmers involved and the rural community as a whole the benefits of a better income.

Issues affecting maximization of the economic benefits of accession by Lao PDR

Key priorities

In order to maximize the benefits from accession to AFTA, Lao PDR must focus more attention on the issues which relate to trade. This means looking beyond the mechanics of the CEPT scheme and the list at the structure and orientation of the economy and at ways to deal with the kinds of problems which impact on trade including the ones outlined in this and the companion report. A policy environment which encourages positive engagement with trade issues and potential is the top priority. For this to occur some reorientation of the current policy of self-sufficiency in food production is necessary. A fundamentally different attitude towards control and regulation needs to be developed too. There should be an indication on the part of officials not to control and regulate unless it is essential. Information collected for regulatory purposes by one area, ministry or department should be used by others so that multiple permits can be done away with. Rules should be transparent and consistently applied. They should be administered without any personal bias. This will involve a major change in style in some places.

Policies should be developed in a context of Lao PDR being part of the regional and global economy and domestic issues should be analyzed taking into account international and regional implications. In the trade area, a basic starting point for this kind of analysis is a good set of international trade statistics. These do not exist at present. Another broad priority is to

consider trade problems from a collective departmental perspective. Almost always, trade issues involve the interests of more than one ministry and more than one sector of the economy. Continuing to find ways of involving the private sector will be important. The private sector lives 'market orientation' and given the right kind of structure could be drawn effectively into discussions about policies for further processing of agricultural commodities and reductions in administrative barriers to trade.

Cooperative studies, workshops perhaps independently facilitated, on problems experienced by participants in the chain of activities which constitute the transformation of agricultural products into food on plates in overseas countries could also be valuable. Development assistance funding might be considered to fund such as an exercise.

There will be a continuing need for development of the farming systems necessary to underpin the crop diversion policy. This can be a long-term process. Targeted training for extension staff in the Department of Agriculture will also be a priority if products are to be suitable for the export market. Improvements in rural infrastructure such as roads and markets would also help maximize the benefits of AFTA.

Product priorities (area of comparative advantage)

Lao PDR has unrealized areas of comparative advantage in agriculture and forestry. There has been a considerable amount of commentary on this question of areas of comparative advantage in past report on Lao PDR agriculture. Table 3 summarizes the situation. Areas of comparative advantage provide a useful guide for priority setting, but it remains the case that the market itself and the observation and analysis of a freely operating market provides the best guide for priority setting.

Table 3 Agricultural products identified as having a comparative advantage or as possibilities for crop diversification.

Item	Source/Research Basis	Comment
Vegetables, groundnuts, soybeans, melons	World Bank	Possibilities for diversification and scope for production near urban areas
Vegetables, groundnuts, pig and cattle raising	World Bank	Potential comparative advantage vis a vis Thailand
Coffee	World Bank	Already a significant and growing export
Sugarcane	World Bank	Depends on processing capacity
Live cattle and buffalo	World Bank	Significant unrecorded exports to Thailand Animal disease issues need to be addressed if trade is to be formalized
Maize, vegetables and beans, sweet potatoes, mungbeans, soybean, groundnuts, tobacco, cotton, sugarcane, jute and sesame	FAO	Possible cash crops particularly in Xiengkhouang where transport constraints inhibit commercial production of low value agriculture and forestry products
Indigenous fruits, exotic tropical and sub-tropical fruits and vegetables, Iris potatoes, garlic, asparagus, mushrooms and sericulture	FAO	
Plantation timber	Various	
Indigenous fish	FAO	

Policy options to maximize the economic benefit of accession

A number of policy options need to be considered in order to maximize the benefits of accession to AFTA.

Change the self-sufficiency policy

Move away from the policy goal of food self-sufficiency towards one of encouraging a globally competitive agricultural sector. This will encourage local and foreign investment into agriculture, because investors are interested in growth not self-sufficiency. Import substitution offers limited opportunities for growth, but can be a starting point so long as the policy does not lock in high costs for export industries. Global markets offer the necessary scale of growth. Subsistence farmers will continue to produce their own food needs and continue to explore cash cropping possibilities, but food security for some individuals, communities and the country will be achieved through trade. The size and endowments of the Lao PDR economy make protectionist policies infeasible. The long border with Thailand makes high tariffs and quantitative restrictions virtually impossible to enforce. Export capacity will need to be strengthened and constraints to exporters eliminated. An export led strategy provides both foreign exchange to meet import demand and employment generation. For agriculture the existing policy direction of 'market orientation' will need to be seen as 'export orientation' because it is in export markets that the most lucrative prospects exist for Lao farmers.

Minimize the regulatory role of the state

Minimize the regulatory role of the state by reducing tariffs and by removing other impediments to trade experienced as added costs by those who are engaged in trade.

Move certain agricultural items to the Inclusion List

Move agricultural items to the Inclusion List where Lao PDR tariffs are already low (ie at the 5% level which is the target level for this list). The objective of AFTA is to build up the size of the Inclusion List. Leaving items with a 5% rate off the list simply does not make sense unless there are NTBs associated with them.

Move agricultural items to the Inclusion List, where agricultural items have been identified as having a comparative advantage. This will ensure that the comparative advantage is honed and sharpened. High tariffs for products which have comparative advantages discourage investment in new technology and quality improvements, because profitable business can be carried out simply by taking advantage of the higher than normal domestic prices created by the presence of the tariff. Begin phasing these rates out early so that the expectation of lower tariffs is established in a way that allows adequate time for adjustment in business practices to cope with the lower rates.

Establish a firm schedule for rate reductions

For all other tariff rates establish a firm schedule for reductions so that necessary planning by producers for investment to upgrade efficiency to cope with the rates can be carried out and where necessary targeted extension assistance can be put in place.

Do not use tariffs for non-trade purposes

Resist the temptation to use tariffs as a substitute for some other more appropriate policy instrument, for example health certification, effective environmental management or excise taxes. Provide a predictable schedule of tariff reduction for duties on luxury food items so that the revenue impact can be managed and forecast.

Reduce tariffs on inputs into farm production

Reduce tariffs promptly on inputs into farm production. Special tax and tariff exemptions for certain companies and businesses reduce the prospect of competition in the domestic economy and will increase cost to the emerging cash crop element of the agricultural sector. Tariffs add to the costs of farmers, who, unlike large investors, do not receive tax concessions in order to encourage investment. Lowering these tariffs on farm inputs will compensate farmers for this and encourage investment by them.

Workshops to examine problems in the marketing chain

Sponsor workshops aimed at examining the impediments experienced in the chain of transactions from the farm to the consumer of food products. Involve producers, traders, processors, consumers and government officials in these workshops. Traditional transaction-based monitoring and regulation systems need to be reviewed so that costs associated with these systems can be reduced. The high cost of some services to the agricultural sector (eg. transport costs through Thailand) should be addressed. These problems seem to apply more to the agricultural processing sector, but farmers depend on this part of the sector being healthy so that they have a market for their products.

Continue with rural development and upgrading rural infrastructure

Recognize that a considerable investment is needed in developing new farming systems in most areas of the Lao agricultural sector and particularly for non-traditional cash crops with export potential. This will take time, will involve foreign investment (including development assistance) and implementation will require a considerable upgrading of farmer education through an intensification of extension efforts. Additional training is also needed for extension officers.

Continue efforts aimed at upgrading rural credit, rural infrastructure (roads, storage facilities, etc) so that cash crops can flow to markets.

Myanmar Country Report

U Aung Hlaing[*]

Introduction

Myanmar is geographically located between the two most populous nations in the world and is also the largest country in mainland South-East Asia. The country possesses a vast land area of over 676,000 km^2. It also has a large potential of land resources for cultivation with adequate water supply and favorable climatic regions, namely the tropic south covering two-thirds and the temperate south which is the remaining one-third of the country.

The present status of land utilization in Myanmar can be seen in Figure 1, which shows that only half of the cultivable area is currently utilized and available cultivable land remains as much as the area under cultivation.

Figure 1 Land utilization by the land in 1998/99.

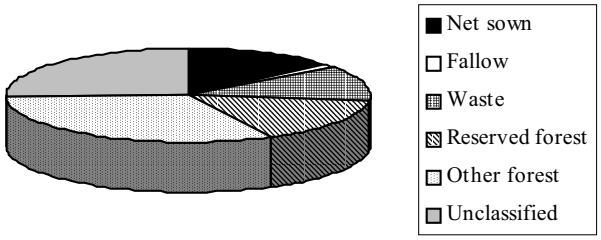

The population of Myanmar was approximated at 49 million in 1998/99 increasing steadily at a rate of 1.8% per annum. About 75% of the population are rural dwellers where farming is their main occupation. The total labor force is estimated to be 18 million, of which 63% are engaged in agriculture, livestock and fishery sectors that contribute 44% of total GDP of the country.

The major export items in the agricultural sector of the country are rice, maize, pulses, oilseeds and industrial crops like jute, cotton, sugar and rubber, etc. Myanmar was one of the founding members of the World Trade Organization (WTO) and is trying to follow the measures of trade liberalization established by WTO. In addition, as a full-fledged member of ASEAN, the country is taking the opportunity to join the ASEAN Free Trade Area (AFTA) in order to enjoy the advantages under the Common Effective Preferential Tariff (CEPT) Scheme.

[*] Department of Agriculture, Ministry of Agriculture and Irrigation, Yangon, Myanmar.

The economy

Myanmar had lived with a centrally planned economy for more than a quarter century, from 1962 to 1998, with an inward-looking or import substitution policy. This policy led the country to balance of payment difficulties and stagnation in economic development.

The structural changes of GDP by sector are shown in Table 1, which also shows that the ratios of agriculture, livestock and fishery and forestry sectors to the total GDP are still similar to those in the late 1980s. This situation could be attributed to Myanmar's national plans that promote, unlike most other neighboring countries, the development and modernization of the agricultural sector as the base and development of other sectors as well.

In a bid to take steps to restructure the country's economy and increase the role of market forces, the government in 1987 adopted deregulatory measures and removed the barriers to private sector participation in the economy. These reform measures focussed on stimulating domestic supply through liberalization of the agricultural sector and opening up the foreign investment regime. The government first decontrolled various crops including paddy as free commodities for trading. However, agricultural market liberalization got into full swing in 1989, under the present government, allowing private entrepreneurs to engage in the activities of procurement, marketing, milling, transporting and storage of all agricultural produce except export of rice, which is still under the state monopoly.

The cultivation of pulses in Myanmar does not pose much difficulty and is feasible on a large scale both in paddy land and in Yar (land where crops which require less water are grown). About 2 million acres (0.81 million ha) of pulses have been grown for many years. But, with the liberalization in trade policies, the production of some exportable peas and beans increased noticeably in response to market demand. The sown area of pulses increased to 6.08 million acres (2.46 million ha) in 1998/99 and further measures are being taken to enhance the area to 8 million acres (3.24 million ha) in the near future. The situation of area expansion for pulses and their exports are shown in Table 2.

The popular varieties of pulses for export constitute chickpea, black gram, green gram, pigeon pea, soybean and butter bean (Table 3). Sorghum, which has no export demand, is grown in the central dry zone region especially for the purpose of feeding cattle. Although demand for chickpea exists in the export market, there are some restrictions on this crop for export in order to fulfill the demand from the army. The area of maize has also been increased due to the introduction of high yielding hybrid varieties, although the export of this item is partially restricted to fulfill the local animal feed demand. As for the tuber crops, the amount of potato export is negligible, since Myanmar has few facilities to handle such a perishable crop. Cassava and sweet potato are also grown for some specific industrial demands and for local consumption only, although they have potential of large-scale production for export.

Current development in the agricultural sector

In addition to the measures of trade liberalization, the Ministry of Agriculture and Irrigation is carrying out efforts to develop new agricultural land, provide irrigation water, agricultural machinery and technology know-how to the farmers in order to help promote production in the sector and increase the export of agri-commodities as well. One recent development in materializing large-scale agricultural businesses in the country is permitting national private entrepreneurs, who were previously engaged in construction, to reclaim new agricultural land in flooded areas, deep-water areas and existing fallow land around the whole

Table 1 Structural changes of gross domestic product by sector (at 1985/86 constant producers' prices).

No.	Particulars	1988/89	1989/90	1990/91	1991/92	1992/93	1993/94	1994/95	1995/96	1996/97 (Provisional/ actual)	1997/98 (Provisional)
1.	Goods	59.4	61.0	60.9	60.4	61.1	61.0	60.7	60.6	60.6	60.4
	1. Agriculture	38.5	39.0	38.7	37.5	38.4	37.9	37.6	37.1	36.2	35.6
	2. Livestock & fishery	8.0	7.4	7.2	7.6	7.3	7.2	7.1	6.8	7.2	7.3
	3. Forestry	1.4	1.8	1.9	1.9	4.6	1.6	1.2	1.1	1.1	1.0
	4. Energy			0.3	0.3	0.3	0.2	0.2	0.2	0.2	0.3
	5. Mining	0.7	0.9	0.6	0.7	0.8	0.9	1.0	1.1	1.1	1.1
	6. Process & manufacturing	8.7	9.3	9.1	8.8	8.9	9.1	9.2	9.3	9.2	9.2
	7. Electric power	0.6	0.7	0.7	0.7	0.9	1.0	1.0	1.0	1.0	1.0
	8. Construction	1.5	1.9	2.4	2.9	2.9	3.1	3.4	4.0	4.6	4.9
2.	Services	18.2	16.2	16.5	17.4	16.8	17.2	17.6	18.0	18.2	18.7
	1. Transportation	3.5	3.7	3.8	4.0	4.0	4.1	4.3	4.3	4.2	4.3
	2. Communication	0.7	0.7	0.7	0.8	1.0	1.0	1.1	1.3	1.5	1.6
	3. Financial institution	3.4	0.5	0.6	0.6	0.6	0.9	1.2	1.5	1.7	1.9
	4. Social & administrative service	5.9	6.7	6.8	7.2	6.7	6.8	6.8	6.7	6.6	6.7
	5. Rental & other services	4.7	4.6	4.6	4.8	4.5	4.4	4.2	4.2	4.2	4.2
3.	Trade	22.4	22.8	22.6	22.2	22.1	21.8	21.7	21.4	21.2	20.9
4.	Gross domestic product (1 + 2 + 3)	100.0	100.0	100.0	100.0	100.0	100.0	100.0	100.0	100.0	100.0

country. Almost 2 million acres (0.8 million ha) have been allotted for the cultivation of rice, cotton, sugarcane, pulses, oilseed crops, rubber and oil palm along with the permission to export 50% of the produce for limited crops like rice, cotton and rubber. Since foreign direct investment in the agricultural sector of Myanmar is still minimal, the Ministry is also encouraging foreign investors to invest in the agricultural sector. The types of investment being encouraged are in the form of 100% foreign investment, joint ventures with private companies or the government for the purpose of long-term lease of land for cultivation of seasonal and perennial crops along with agriculture-based industries. The rates of land rentals for the purpose of agriculture are reasonable and long-term agricultural projects proposed by investors are being permitted according to the rules and regulations of the Myanmar Foreign Investment Law.

Table 2 Sown area, production and export of pulses.

No.	Year	Area ('000 ha)	Production ('000 mt)	Export ('000 mt)	Ratio of Export to Production (%)
1.	1987/88	818	575	75	13
2.	1988/89	730	382	17	4
3.	1989/90	856	466	60	13
4.	1990/91	1,000	564	226	40
5.	1991/92	1,265	727	204	28
6.	1992/93	1,497	940	449	48
7.	1993/94	1,519	923	514	56
8.	1994/95	1,746	1,163	425	37
9.	1995/96	2,046	1,403	610	43
10.	1996/97	1,963	1,398	595	43
11.	1997/98	2,091	1,598	769	48
12.	1998/99	2,457	1,678	n.a.	n.a.

Table 3 Yearly sown area, production and export of major CGPRT crops in Myanmar.

No.	Crop/Year	Sown Area (ha)	Production (mt)	Export (mt)	Export Ratio to Production (%)	Export Destinations
1.	**Maize**					Hong Kong, Japan, Singapore, Japan, Malaysia, Thailand, India.
	1987/88	159,843	223,750			
	1988/89	137,857	193,045			
	1989/90	133,189	193,785			
	1990/91	140,664	187,077			
	1991/92	140,127	191,217	41,503	21.5	
	1992/93	155,814	208,377	44,425	21.3	
	1993/94	149,914	204,654	40,388	19.7	
	1994/95	99,189	284,434	70,352	24.7	
	1995/96	167,330	274,818	62	0.0	
	1996/97	166,685	285,972	n.a.	n.a.	
	1997/98	162,000	308,000	48	0.0	
	1998/99	185,000	303,000			
2.	**Sorghum**					
	1987/88	192,036	138,192	n.a.	n.a.	
	1988/89	177,358	100,345	n.a.	n.a.	
	1989/90	187,374	102,978	n.a.	n.a.	
	1990/91	180,140	112,202	n.a.	n.a.	
	1991/92	190,527	105,984	n.a.	n.a.	
	1992/93	209,633	121,810	n.a.	n.a.	
	1993/94	212,399	127,927	n.a.	n.a.	
	1994/95	215,890	108,911	n.a.	n.a.	
	1995/96	230,331	132,725	n.a.	n.a.	
	1996/97	226,221	133,077	n.a.	n.a.	

Continued ……

Table 3 Yearly sown area, production and export of major CGPRT crops in Myanmar (continued).

No.	Crop/Year	Sown Area (ha)	Production (mt)	Export (mt)	Export Ratio to Production (%)	Export Destinations
3.	**Chickpea**					
	1987/88	195,145	125,363	3,028	2.4	Singapore, Bangladesh,
	1988/89	138,215	56,227	945	1.7	India, Malaysia, Pakistan,
	1989/90	158,552	80,592	2,399	3.0	Indonesia.
	1990/91	178,966	82,610	38,084	46.1	
	1991/92	185,681	88,951	38	0.0	
	1992/93	168,294	80,142	64,501	80.5	
	1993/94	133,038	57,990	74,947	129.2	
	1994/95	130,189	61,545	13,455	21.9	
	1995/96	166,041	74,050	14,754	19.9	
	1996/97	139,331	72,051			
	1997/98	120,000	90,000			
	1998/99	128,000	83,000			
4.	**Blackgram**					
	1987/88	103,231	81,006	55,086	68.0	Singapore, Bangladesh,
	1988/89	91,847	44,230	12,192	27.6	India, Indonesia, Pakistan,
	1989/90	103,000	48,748	26,507	54.4	Malaysia, Japan,
	1990/91	146,531	76,612	58,024	75.7	Bangladesh.
	1991/92	293,286	150,013	79,779	53.2	
	1992/93	325,117	172,461	148,054	85.8	
	1993/94	280,355	146,696	132,974	90.6	
	1994/95	362,518	218,001	117,436	53.9	
	1995/96	474,299	283,672	214,633	75.7	
	1996/97	410,028	250,937			
	1997/98	492,000	420,000			
	1998/99	535,000	469,000			
5.	**Greengram**					
	1987/88	48,231	119,180	1,517	1.3	Singapore, Philippines,
	1988/89	49,650	122,686	496	0.4	India, Indonesia, Malaysia,
	1989/90	91788	226,809	14,541	6.4	Pakistan, Japan,
	1990/91	116,672	288,297	47,183	16.4	Bangladesh, Hong Kong,
	1991/92	175,747	434,272	66,514	15.3	Korea, U.A.E.
	1992/93	253,204	627,668	85,802	13.7	
	1993/94	291,928	721,353	108,675	15.1	
	1994/95	383,389	947,355	128,154	13.5	
	1995/96	4547,598	1,137,114	131,194	11.5	
	1996/97	449,654	1,111,095			
	1997/98	546,000	449,000			
	1998/99	706,000	448,000			
6.	**Pigeon pea**					
	1987/88	66,728	31,721	2,261	7.1	Singapore, India, Malaysia,
	1988/89	69,675	31,703	0	0.0	Pakistan, Thailand,
	1989/90	62,632	28,353	6,482	22.9	Indonesia, Bangladesh,
	1990/91	70,795	57,308	35,529	62.0	Japan, U.A.E, Hong Kong,
	1991/92	113,383	48,199	20,154	41.8	Korea, Philippines.
	1992/93	214,578	106,252	108,758	102.4	
	1993/94	231,082	109,027	132,761	121.8	
	1994/95	257,926	110,987	109,624	98.8	
	1995/96	249,852	110,447	125,836	113.9	
	1996/97	285,126	142,797			
	1997/98	252,000	176,000			
	1998/99	270,000	160,000			

Continued ……

Table 3 Yearly sown area, production and export of major CGPRT crops in Myanmar (continued).

No.	Crop/Year	Sown Area (ha)	Production (mt)	Export (mt)	Export Ratio to Production (%)	Export Destinations
7.	**Soybean**					
	1987/88	34,571	20,808			Singapore, Malaysia, Indonesia,
	1988/89	34,460	20,591			Philippines, Japan.
	1989/90	33,516	19,500			
	1990/91	32,651	19,683			
	1991/92	34,463	20,609	1,295	6.3	
	1992/93	38,209	23,156	1,300	5.6	
	1993/94	45,950	26,085	1,550	5.9	
	1994/95	60,824	37,999	240	0.6	
	1995/96	71,610	50,206	20	0.0	
	1996/97	68,558	47,751			
	1997/98	79,000	75,000			
	1998/99	103,000	84,000			
8.	**Butter bean**					
	1987/88	45,215	43,466	7,661	17.6	Japan, Korea, Netherlands,
	1988/89	33,704	27,355	2,178	8.0	Germany, India, Indonesia,
	1989/90	35,540	31,280	3,646	11.7	Malaysia, China.
	1990/91	45,491	37,526	5,824	15.5	
	1991/92	41,103	36,943	9,779	26.5	
	1992/93	38,677	33,384	12,101	36.2	
	1993/94	35,442	30,299	15,371	50.7	
	1994/95	39,818	24,848	9,734	39.2	
	1995/96	43,815	27,588	17,390	63.0	
	1996/97	43,476	29,378			
	1997/98	44,000	41,000			
	1998/99	45,000	39,000			
9.	**Potato**					
	1987/88	15,823	1,986,634			Singapore, Malaysia.
	1988/89	14,473	1,862,508			
	1989/90	14,181	1,992,896			
	1990/91	14,741	2,083,316			
	1991/92	15,671	2,388,613			
	1992/93	15,748	2,184,402			
	1993/94	16,333	2,646,591			
	1994/95	15,899	2,238,543	41	0.0	
	1995/96	19,474	2,860,893	69	0.0	
	1996/97	20,609	3,350,663			
	1997/98	22,000	23,700			
	1998/99	23,000	23,600			

Conclusion

There is still much room to explore the possibilities of promoting the production of CPRT crops, especially food legumes, in Myanmar. Generally speaking, increased production of such crops would be of benefit to the growers and to the environment of our rice-based ecosystem and eventually to the country as a whole. However, when it comes to thinking of increased production, everyone may well be aware that it needs to be assessed in the form of SWOT analysis, i.e. our strengths and weaknesses as well as external opportunities and threats, on this area. Only when it is based on reliable assessment of such an analysis, can the country establish appropriate long-term objectives and strategies that will suit the majority of the producers in the country and our regional dimension as well. Therefore, Myanmar would like to

draw the attention of international organizations, like CGPRT, for consideration in providing technical assistance projects in order to help analyze those assessments in detail so that the decision-makers of the country would be able to set up a vision for the foreseeable future.

Effects of Trade Liberalization on Agriculture in Nepal

Shambu B. Pandey and Devendra Gauchan[*]

Introduction

Agriculture is the backbone of the Nepalese economy. It accounts for 40% of the Gross Domestic Product (GDP) and is the major source of export earnings. Agriculture remains the major source of employment and livelihood for over 80% of the population in Nepal (MOF 1998).

Agro-ecologically, Nepal is divided into three parallel geographic regions extending from east to west, the gangetic flood plain known as the Tarai, the Hills and the Mountains covering, respectively, 23%, 44% and 34% of the total area of 147,181 km^2. Total cultivated land in Nepal is roughly 3 million hectares which is about 32% of the total area. The country has a high population density of 6.2 person per hectare of cultivated land.

Agricultural production in Nepal is characterized by its complexity, diversity and subsistence production. Mixed crop and livestock farming systems predominate throughout Nepal, with major differences in the mix of crops and animals in the three agroecological belts (terai, hills and mountains). Terai accounts for 53% of the country' s gross cropped area, 48% of the area under food crops, and 85% of the area under cash crops. The shares of hills, and mountains in the gross cropped area are 38% and 9%, respectively. Food crops (rice, maize, wheat and potato) constitute the bulk of food production and offer potential for substantial yield increase in Nepal.

The country has a wide range of agroecological diversity to exploit the potentials of high value horticultural crops (e.g. citrus, apple, vegetables) and livestock products. The growth of high value horticultural production is increasing recently as a result of increased urbanization and commercialization. The livestock population in relation to extent of arable land and animals per person is high in Nepal by Asian standards. An average family in the hills keeps 3.7 cattle and 1.9 buffalo and in the tarai 2.5 cattle and 0.85 buffalo in the hills. The production of milk, meat and eggs in 1995/96 was 930,500 MT, 163,636 MT and 422 million, respectively (CBS 1997). The present contribution of crops, horticulture, livestock and fishery to agricultural gross domestic product (AGDP) is 50, 14, 35.5 and 0.5 %, respectively, in Nepal (NPC/HMG 1997).

Since the early 1960s, Nepal started planned development and the agricultural sector has been given top priority since the fifth national development plan. Until the late 1980s Nepal had a relatively closed economic and trade policy, which was not conducive for overall economic and agricultural growth. The government had control and monopoly in the production, marketing and trade of the majority of agricultural and industrial products.

His Majesty's Government (HMG) of Nepal, with the assistance of the World Bank and International Monetary Fund (IMF), initiated structural adjustment and trade policy reform programs in 1985/86. However, major policy reforms in trade and the economy were realized mainly in the 1990s with the advent of multiparty democracy in Nepal. Policy reforms in

[*] Nepal Agricultural Research Council, Kathmandu, Nepal.

external (trade) and domestic sectors were initiated mainly to liberalize the economy and efficiently utilize resources through export led growth.

Despite the government's efforts to liberalize trade fully, little is known about its effects on agricultural growth and the overall economy. We lack information on the changes and constraints to increased agricultural export and the overall contribution of this sector in the country's economy. Therefore the main objectives of this paper are:

- To describe national economic and agricultural development policies with special attention to the trend of trade liberalization;
- To assess effects of trade liberalization on foreign trade, agricultural export, imports, commodity trade and overall national economy; and
- To examine present constraints to agricultural trade liberalization and specify policy options and preparedness to enhance agriculture and improve the farmer's livelihood.

Overview of general economic and trade policies

Trade policy plays an important role in the development of any country. Nepal's trade and trade policy have been influenced largely by government policy as part of the Five-Year Plans. Prior to 1957 Nepal's trade policy was virtually limited to the trade policy with India as Nepal was isolated in the world economy. Thus in 1957, Nepal formulated a policy of trade diversification with the aim of (a) increasing exports, (b) earning more convertible foreign exchange to meet her developmental needs, and (c) reducing dependence on a single country for her external trade. In December 1985 the Nepalese currency was devalued by 14.7% and since then export subsidy has also been cancelled (Rana 1991). In May 1986, a currency basket system was adopted to make the exchange rate more reflective of trade patterns and more flexible. The basket also included Indian currency.

Nepal has been implementing economic reform programs supported by the World Bank and International Monetary Fund (IMF) from the late eighties (World Bank 1997). In 1985, Nepal initiated economic reform programs which included (a) tariff rationalization, (b) reduction in fiscal deficits, and (c) privatization (IIDS 1996). The government also introduced further reforms in its exchange rate policy and moved to full convertibility for all current account transactions in 1993. Before 1993 Nepal pursued a fixed exchange rate policy with the rate generally fixed at a lower rate than the projected market rate. The Nepalese currency was devalued a couple of times between 1989 and 1993 to remove its anti-export bias and to correct the trade and current account deficit. The currency also depreciated by about 12% again in 1995 (Sharma 1997). However, changes and reforms have always tended to cover only a small aspect in the agriculture sector. This may be due to external factors like Indian policy considerations and dependence of the largest sector of the populace on subsistence agriculture.

In 1992, the elected government pursued an ambitious policy of reforms in the areas of trade, industry, foreign investments, exchange rate, and fiscal monetary policies. Along with structural adjustments, liberal measures like the open general license (OGL) and auction systems were introduced. Price decontrols have been initiated in virtually all aspects. With introduction of the Structural Adjustment Program, several changes were made, including a massive tariff reduction from 450% to 110%, except for synthetic fibers and some luxury goods, and introduction of auction systems for selected items. But these measures alone were not adequate (IIDS 1992).

Nepal's trade regime, which was earlier characterized by high tariffs, quantitative restrictions, requirements on import licensing, and controls on foreign exchange transactions and investments, has been fully liberalized since 1992. Tariff rates were reduced, restructured

and rationalized (Sharma 1997). Quantitative restrictions and import licensing were also eliminated under the new policy. Export procedures have also been simplified: bonded warehouse and duty drawback facilities were introduced to promote exports.

Nepal is presently a permanent observer and soon planning to be a member of the World Trade Organization (WTO). It is expected that WTO membership will allow Nepal to design its development strategy and trade policies in a more predictable and stable environment. One of the great expectations of Nepal is to increase the competitiveness of Nepalese agricultural products in the world market resulting from the market access through gradually reductions of tariffs and elimination of inconsistent non-tariff measures by many importing countries (Shakya 1999).

National agricultural development policy

Agricultural policy must stress export-led growth to boost agricultural growth. Policy should aim to raise the farmers' income and this will depend on the removal of disincentives for the export agricultural products.

A major change in the agricultural sector was the opening of the fertilizer sector (except urea) to the private sector. In recent years, fertilizer prices have been gradually raised and subsidies reduced. In tandem with the Indian policy, in 1992/93, the Nepali government removed subsidies on phosphatic and potassic fertilizers, while urea continued to be heavily subsidized. In 1997, the government reduced the monopoly of AIC (Agricultural Input Corporation) to import and market fertilizer by allowing a subsidy to the private sector for fertilizer import and marketing on an equal footing with public sector institutions such as AIC. By the end of 1999, there was a policy to withdraw subsidy completely for urea (Winrock 1997). Similarly restrictions on the export of agricultural outputs have been waived (Sharma 1999). However, price controls and a quantitative restriction on output (e.g rice) due to national food security concerns is still a constraint for agricultural producers.

Nepal has implemented an Agricultural Perspective Plan (APP) for the overall agricultural and economic development of the country. APP implementation will result in the production and export of sizeable quantities of high value horticultural and livestock products for foreign exchange earnings. This will require strengthening the capability of the relevant institutions in food quality and safety management where effective participation of producers, processors, traders and food control agencies is essential. Strengthening the National Food Control Agency is the most important element for enhancing capability in food trade, as well as for implementing WTO Sanitary and Phytosanitary/Technical Barriers to Trade requirements in the country (Karki 1999). The current National Ninth Plan of the government and recently formulated Agricultural Perspective Plan have emphasized an export-led agricultural sector to ensure food security, poverty alleviation and future economic growth of the country.

Effects of trade liberalization

Trade liberalization by definition reduces or eliminates the protection enjoyed by certain domestic producers and opens the economy to a greater volume of exports and imports. Similarly, trade policy reforms change the relative incentives; they improve the profitability of exportable production and reduce incentives for the production of import substitution products and non-tradables. This could improve export performance of the country. Similarly, real devaluation generally results in lowering of anti-export bias and in raising of exports (IIDS 1996). As a result of economic reforms and trade liberalization, Nepal moved from a distorted

external trade and payment system to a liberal trade and import regime with full convertibility of currency on current account over the last 8 years. These reforms provided strong incentives for exports, but also imports increased significantly.

Impact on overall economy

Trade liberalization has positive effect on the overall growth of the economy. The gross domestic product (GDP) grew 5.6% during 1991-94 (post-liberalization) compared to 4.8% in 1986-1990 (pre-liberalization) period (Dahal 1998). Table 1 presents the trend of GDP and agricultural and non-agricultural GDP at factor costs. The increasing trend of GDP in recent years is due to significant increases in non-agriculture sectors (industry, trade, transport, tourism, construction and services) which have grown at an average rate of 6.5% per annum (World Bank 1997). Not much impact, however, has been seen in agricultural GDP. In fact, the share of agricultural GDP has declined significantly, whilst the share of non-agricultural GDP has grown rapidly after trade liberalization.

Table 1 Trend of GDP and AGDP at factor costs (million Rs, base year 1984/85 price).

Years	Agricultural GDP	Non-Agricultural GDP	Total GDP
1976/77	11,141 (62.5)	6,681 (37.5)	17,822 (100)
1981/82	12,616 (60.3)	8,304 (39.7)	20,920 (100)
1986/87	23,213 (48.9)	24,214 (51.1)	47,427 (100)
1991/92	28,070 (44.9)	34,461 (55.1)	62,531 (100)
1996/97	32,529 (41.0)	46,859 (59.0)	79,388 (100)
1997/98	32,867 (40.3)	48,684 (59.7)	81,551 (100)

Source: Ministry of Finance (1999). Note: US$ 1= NRs 68.0.

Trend in foreign trade

Table 2 presents the trend of the foreign trade situation for Nepal (1976/77 to 1997/98). The volume of exports and imports was lower during the pre-liberalization period (before 1990). They were lowest during the 1970s and increased gradually until 1986/87. During the post-liberalization period (after 1991/92) the volume of trade increased significantly. Both export and import increased dramatically after 1985/86. The negative trade balance further increased after liberalization. The direction of foreign trade also changed dramatically. Until 1981/82, India was the sole trading partner for Nepal. Trade liberalization helped the country's trade towards different countries. After the mid-1980s 75% of Nepal's trade occurred with foreign countries other than India.

Table 2 Trend of foreign trade (export/import) for Nepal (1976/77 to 1997/98) in million NRs.

Description	1976/77	1981/82	1986/87	1991/92	1996/97	1997/98
Exports (F.O.B.)	**1,164.7**	**1,491.5**	**3,011.4**	**13,706.5**	**22,636.5**	**27,467.7**
India	779.6	994.4	1,322.6	1,450.0	5,226.2	9,012.4
Other countries	385.1	497.1	1,688.8	12,256.5	17,410.3	18,455.3
Import (C.I.F.)	**2,008.0**	**4,930.3**	**10,905.2**	**31,940.0**	**93,553.4**	**88,796.5**
India	1,343.5	2,280.9	4,262.0	11,245.5	24,853.3	27,237.1
Other countries	664.5	2,649.4	6,643.2	20,694.5	68,700.1	61,559.4
Trade Balance	**-843.3**	**-3,438.8**	**-7,913.8**	**-18,233.5**	**-70,916.9**	**-61,328.8**
India	-563.9	-1,286.5	-2,959.4	-9,795.5	-19,627.1	-18,224.7
Other countries	-279.4	-2,152.3	-4,954.4	-8,438.0	-51,289.8	-43,104.1
Total Volume of Trade	**3,172.7**	**6,421.8**	**13,897.6**	**45,646.5**	**116,189.9**	**116,264.2**
India	2,123.1	3,275.3	5,565.6	12,695.5	30,079.5	36,249.5
Other countries	1,049.6	3,146.5	8,332.0	32,951.0	86,110.4	80,014.7
Share in Total Trade (%)	**100**	**100**	**100**	**100**	**100**	**100**
India	66.9	51.0	25.8	27.8	25.9	31.2
Other countries	33.1	49.0	74.2	72.2	74.1	68.8

Source: Ministry of Finance (1999).

Agricultural export situation

Rice was a major export commodity for Nepal until the 1980s. This was initiated by establishing the Rice Exporting Companies under government undertaking during the 1970s. However, presently all agricultural trade is handled by the private sector. Table 3 presents the share of agricultural exports in the total export trade of Nepal. The data reveal that the trend in the volume of exports to India and other countries is increasing. However, its share is declining during the post-liberalization period. The share of agricultural exports until 1981/82 was half of the total trade, which declined rapidly during recent years to only 12% in 1996/97.

Table 3 Share of agricultural export in total foreign exports in million Nepal Rs.

Description	1981/82	1986/87	1991/92	1996/97
Total Exports	**1,491.5**	**3,011.4**	**13,706.5**	**22,636.5**
Total agricultural exports	752.1	1,104.8	2,230.3	2,741.7
Agricultural exports to India	440.3	798.7	863.5	1,906.9
Agricultural exports to other countries	311.8	306.1	1366.8	834.8
Share of agriculture in total exports (%)	50.42	36.69	16.27	12.12

Source: MOF (1999), FNCCI (1999).

Rice and jute goods were the major export commodities until the mid 1980s. However, after 1986/87, rice and maize were so longer exported and export of jute goods also declined. Pulses, ginger, hide and skins, processed agro-products and live animals have presently taken the major share of agricultural exports. After the recent Nepal-India Trade Treaty, the export share of processed/diversified or high value-added products increased dramatically. The share of export trade to other countries (other than India) increased significantly in recent years particularly for commodities like pulses, hides and skins, etc (Table 4).

Agricultural import situation

The share of agricultural import and its trend in total foreign trade is presented in Table 5. The trend of agricultural imports is increasing in Nepal. Half of the total agricultural imports comes from India alone. The share of agricultural import in the total import trade is very low. Over the years this small share of agricultural imports is also declining.

Table 4 Exports of agricultural commodities to India and other countries in million Rs.

Description	1981/82		1986/87		1991/92		1996/97	
	India	Others	India	Others	India	Others	India	Others
Rice	136.5	86.1	14.4	-	-	-	-	-
Maize	26.1	-	-	-	-	-	-	-
Flour	-	-	1.1	-	1.7	-	3.9	-
Ghee	26.2	-	46.6	-	22.6	-	90.0	-
Raw Jute	43.4	62.6	14.5	-	-	-	3.2	-
Jute goods	99.2	1.5	164.5	-	191.9	-	568.4	-
Pulses		58.2	34.3	100.6	14.3	1,144.3	510.7	528.3
Timber	87.2	-	-	-	-	-	-	-
Mustard & Linseed	-	-	103.1	-	72.7	-	35.2	-
Oil cake		-	57.6	-	67.6	-	104.1	-
Rice bran oil		-	44.0	-	94.0	-	106.2	-
Salseed Oil	-	-	16.9	-	-	-	0.4	-
Turmeric		-	-	-	-	-	-	-
Cardamom	-	7.4	-	43.3	-	-	-	-
Ginger	-	-	22.3	-	84.6	-	140.7	-
Dried ginger	15.3	-	35.2	-	-	-	-	-
Medicinal herbs		0.5	8.1	0.1	22.4	4.5	52.6	18.0
Catechu	-	1.9	11.2	1.8	101.0	-	55.4	-
Hides & skins	-	93.6	-	161.0	-	218.0	-	288.5
Live animals	-	-	116.2	-	158.6	-	183.4	-
Kutch	-	-	108.7	-	10.1	-	6.2	-
Hessian	27.1	-	91.0	-	72.2	-	69.2	-
Sacking	49.8	-	40.6	-	29.5	-	74.9	-
Twine	4.1	-	32.4	-	89.7	-	421.0	-
Total	**440.3**	**311.8**	**798.7**	**306.8**	**863.5**	**1,366.8**	**1,906.9**	**834.8**

Source: TPC, (1992); FNCCI, (1999).

Table 5 Share of agricultural import in total foreign import trade in million Nepal Rs.

Description	1991/92	1994/95	1995/96	1996/97
Total Imports	**31,940.0**	**63,679.5**	**74,454.5**	**93,553.4**
Total agricultural imports	4,150.0	5,578.0	6,612.0	7,740.5
Agricultural imports to India	1,732.2	2,677.5	3,466.3	3,740.4
Agricultural imports from other countries	2,417.8	2,902.3	3,146.0	4,000.1
Share of agriculture in total imports (%)	12.99	8.76	8.88	8.27

Source: MOF (1999); TPC (1992).

Rice, vegetables, fruits, edible oils, palm oil, pulses, cumin seeds and peppers, baby food and milk products, live animals are the major imported food commodities in Nepal from India and other countries. Other important imported commodities are fertilizers, pesticides, and agricultural implements. Edible oil, palm oil small cardamom and fertilizers are the main imported commodities from overseas (Table 6).

Impact on overall agricultural growth

Not much impact, however, has been observed in the agricultural sector unlike in the other sectors (IIDS 1996). This sector has been virtually untouched by recent economic reforms and remains at the subsistence level, characterized by low input use and low productivity. Agriculture growth in the present decade has averaged only about 2.3% per annum, less than the rate of population growth (World Bank 1997). Agricultural production is still dependent on the monsoon, and the vagaries of nature cause substantial production fluctuations. However, changes are generally drawn out over a long period of time, and therefore agricultural

production will take some time to respond. The effects of the trade liberalization program on specific sectors of agriculture are briefly outlined below.

Table 6 Imports of agricultural commodities from India and other countries in million Rs.

Description	1991/92		1994/95		1995/96		1996/97	
	India	Others	India	Others	India	Others	India	Others
Rice	241.1	-	418.8	-	499.2	-	379.1	-
Wheat	196.7	-	3.7	-	4.6	-	4.2	-
Pulses	NA	-	134.7	-	119.0	-	149.8	-
Vegetables	134.6	-	344.0	-	338.6	-	417.2	-
Fruits	88.9	-	137.4	-	232.7	-	168.4	-
Tea	70.5	-	64.0	-	48.6	-	86.9	-
Coffee	-	-	18.0	-	23.0	-	25.3	-
Cumin seeds and peppers	95.4	-	187.4	-	216.1	-	205.2	-
Live animals & eggs	571.0	-	378.8	-	331.6	-	303.2	-
Baby food & milk products	182.0	166.9	301.3	-	425.1	-	475.9	-
Sugar	-	-	181.9	-	222.9	-	480.8	-
Molasses Sugar	-	-	66.6	-	98.2	-	205.8	-
Raw cotton	109.9	-	34.0	-	70.6		112.0	-
Cardamom (small)	-	NA	-	19.1	-	87.2	-	771.5
Chewing tobacco	9.2	-	2.7	-	1.3	-	3.4	-
Pan leaves	NA	-	5.0		4.7		7.4	
Bidi leaves	10.1	-	5.1		2.0		3.2	
Betalnut	-	-	-	560.5	-	219.7	-	490.4
Cloves	-	82.2	-	119.6	-	85.6	-	170.0
Edible oil (soybean)	-	571.3	-	114.4	-	419.9	-	592.4
Palm oil (inedible)	-	303.1	-	693.3	-	426.7	-	345.0
Chemical fertilizer	22.8	1,294.3	34.6	1,395.4	313.0	1,906.9	263.5	1,630.8
Insecticides	NA	-	52.4		57.5		83.4	
Agricultural implements & parts	-	-	307.1	-	457.6	-	365.7	-
Total	**1,732.2**	**2,417.8**	**2,677.5**	**2,902.3**	**3,466.3**	**3,146.0**	**3,740.4**	**4,000.1**

Source: TPC, (1992); FNCCI, (1999).

Imports of fertilizer which were in the past controlled by the Agricultural Input Corporation have already been placed under the Open General License System (OGL) and the cap on domestic retail prices has been eliminated. In the initial period of the fertilizer trade liberalization programme, after many years, farmers in many parts of the country have begun to experience no serious shortages of fertilizer in critical times. The supply of urea increased as a whole in the country and the private sector dominated the urea market. But with the deregulation of the fertilizer trade, supply of DAP decreased aggravating the already existing situation of nutrient imbalance (Winrock 1999).

It is widely believed that Nepal's comparative advantage lies in the processing of agricultural products and thus policy reforms should have developed these industries. But exports of these items including rice and jute products have declined in the post liberalization period and few agrobased products have been added in the list. The slow growth in the production and export of agricultural products is partly due to the government price control policy. For example, rice exporters are still required to sell a certain share of their output to the National Food Corporation below market prices (Sharma 1999). This has discouraged rice production and exports, and it must be relaxed if liberalization is to improve welfare in the rural sectors as well.

The overall performance of the agricultural sector in Nepal has remained poor. The country's population is increasing at a faster pace of 2.5% per annum in comparison with the growth of agriculture, which remained almost stagnant in the past three decades. A food exporting country until the 1980s, Nepal turned to be a net food importer during the 1990s. The production resource base has been both shrinking and degrading under the pressure of increasing population and a shortage of new land to be brought into cultivation.

Major constraints to agricultural trade

Agricultural trade could be an important source of economic growth and foreign exchange earning in Nepal. However, this trade sector has been weakened by structural deficiencies in the production, profitability and shipment of exports. Although Nepal has the potential for a wide variety of high value crops and livestock products which can be produced in different agro-climatic regions, lack of suitable policies and programs on agricultural roads, rural electrification, technology development, agribusiness development/marketing, etc. has hampered their expansion to benefit from the potential. The major constraints are described below.

Production constraints

Traditionally surplus food grain provided the bulk of exports, but these surpluses are now very small. Thus continuation of past trends in productivity and dependence on traditional crops alone would further threaten export performance and more importantly rural income. Policies and measures to increase agricultural diversification to high value agricultural production should be emphasized. However, presently high value export oriented agriculture suffers from inadequate availability of suitable technology and inputs at the production points

Poor transport and transit

Agricultural products are perishable and need timely and appropriate transport facilities. Presently Nepal faces severe constraints in transporting goods for foreign trade due to (i) severely limited physical infrastructure for moving, handling and storing goods, (ii) high incidence of damage and theft, and (iii) cumbersome procedures for rationing capacity, ensuring security and satisfying administrative requirements, etc. during shipments.

Poor inspection and quality control

Nepal's exports have suffered from lack of sufficient control over quality. Lack of care in processing, sorting and grading has reduced the marketability of the high value products. Lack of adequate laboratory facilities and personnel and relevant regulatory framework has hindered maintaining good quality standards for the export market.

Lessons learned, conclusions and recommendations

Liberalization programs have been confined more to experiments and less to achievement. There has been little effect of the trade liberalization process on agriculture in Nepal. Agriculture growth in the recent years has averaged only about 3.5% per annum compared to 6.5% per annum in industry, tourism and service sectors. Experience of the past one decade of liberalization reveals that exports of agricultural items including rice and jute products have declined in the post liberalization period and very few agro-based products have been added to the export list. The slow growth in production and export of agricultural products is partly due to the government price control policy. There is also an indiscriminate rise in imports, part of which found its ways to Indian markets. Therefore, major policy reform is suggested to generate multiplier effects on national production, employment, and income levels in Nepal.

The trade deficit has become a permanent phenomenon for Nepal**.** After trade liberalization, although total volume of trade and exports has increased over the years, the

volume of imports also increased rapidly resulting in a negative trade balance. Despite increased growth of trade and exports, the share of agricultural trade is declining and half of the agricultural trade is with India. This indicates that agricultural trade is relatively small in total Nepalese trade. This is bound to be alarming since Nepal's economy is predominantly agriculture based. Recent experiences of other least developed and developing countries in the region shows that there is a greater need for product diversification to boost agricultural export trade. Some ago-products with competitive advantages must be identified which have improved market access to partner countries with a high level of complementarity.

The process of trade liberalization will not progress to the full extent, if the country does not take advantage of the new opportunities offered by liberalized trade. Although Nepal enjoys comparative advantage in the export of high value agriculture, in the coming days (after Nepal joins WTO) international trade will be highly competitive and the competitive edge will be lost due to the infrastructural advantage prevailing in competing countries and markets. Thus full realization of the positive impacts and minimization of adverse impacts due to imports, if any, will require infrastructure for efficient movement, handling, packaging and processing, trade networks and an information dissemination system. Increasing exports will require availability of adequate transport and other facilities to shift supplies from one market to another market, easy access to necessary finance and market information and absence of legal impediments to the movement of agricultural commodities. Building infrastructure is also important to improve production efficiency, and it requires greater relevance in a globally competitive environment. Our existing productivity levels are awfully low compared to competing countries.

Nepal has already opened up its market and initiated new measures to fulfill preconditions for getting full membership in the WTO. Because of the predominantly agro-based economy, Nepal is likely to face some problems in agricultural trade even some time after it gets membership. Nepal has to rely on competitiveness of its exportable products, while keeping its own domestic market open to goods from around the world.

References

ASD. 1994/95. Statistical Information on Nepalese Agriculture. Agricultural Statistic Division, MOA, Singha Darbar, Kathmandu.

APROSC/JMA. 1995. Agricultural Perspective Plan. Prepared for His Majesty's Government of Nepal: Agricultural Project Service and John Mellor Associates,Inc.

CBS. 1997. Statistical year Book of Nepal. National Planning Commission Secretariat, Central Bureau of Statistics, Thapathali, Kathmandu.

Dahal, M. 1993. Structural adjustment and strategies for poverty alleviation. Nepalese Economic Journal, pp. 13-21. TU. Kathmandu, Nepal.

Dahal, M.K. 1998. Impact of Globalization on Nepalese Economy. Nepal Foundation for Advanced Studies (NEFAS), Kathmandu, Nepal.

FNCCI. 1999. Nepal and the World. A Statistical Profile. Federation of Nepal Chambers of Commerce (FNCCI), Kathmandu.

IIDS. 1996. Impact of Economic Liberalization in Nepal. Institute for Integrated Development Studies (IIDS), Kathmandu, Nepal.

Karki, T. 1999. Food quality and safety considerations in international food trade. Paper read at Workshsop on Uruguay Round Agreements on Agriculture and Agricultural Trade in Nepal, August 24, Kathmandu.

MOF. 1998. Economic Survey. Ministry of Finance (MOF), His Majesty's Government of Nepal, Kathmandu.

National Planning Commission. 1994. Agricultural Statistics: Revised crop area series (1974-75 to 1991-92). Strengthening the NPC Secretariat Project, Kathmandu.

Nepal Rastra Bank. 1988. Multi-purpose household budget survey: A study on income distribution, employment and consumption in Nepal. Kathmandu, NRB.

Rana P.S. 1991. Country Report. Agriculture Trade Policy in Asia. Report of Asian Productivity Organization (APO) Seminar, 16-25 Feb, 1988,Tokyo, Japan**.**

Sharma S.P. 1997. Market-led development strategy in Nepal. *In* Development Practices in Nepal. Kathmandu, Nepal

Sharma, V. 1993. Liberalization of economy. Nepalese Economic Journal, pp. 22-31. TU. Kathamndu

Sharma, K. 1999. Trade Policy Reform and Industrialization in Nepal. Shand (eds), Economic Liberalization in South Asia.

Shakya, D.B. 1999. Nepal's experiences in agricultural trade: constraints and expectations from the WTO agreements. Paper read at Workshsop on Uruguay Round Agreements on Agriculture and Agricultural Trade in Nepal, August 24, Kathmandu.

Thapa, G.B.; and Rosegrant, M.W. 1994. Projections and policy implications of food supply and demand in Nepal to the year 2020. HMG, Winrock International Policy Analysis in Agriculture and Related Resource Management. Research report series no. 30. May 1995.

TPC. 1992. Nepal Overseas Trade Statistics 1992-93. Trade Promotion Center Kathmandu, Nepal.

Winrock. 1997. Strategic Reforms in Nepal's Fertilizer Policy. Nepal AgriBrief No. 28: HMG/Winrock International Policy Analysis in Agriculture and Related Resource Management, Kathmandu, Nepal.

Winrock. 1999. A Fresh Look at Fertilizer Trade Deregulation in Nepal. Nepal AgriBrief No. 37: HMG/Winrock International Policy Analysis in Agriculture and Related Resource Management, Kathmandu, Nepal.

World Bank. 1997. Nepal Economic Update: The Challenge of Accelerating Economic Growth. November 11, 1997, Poverty Reduction and Economic Management Division, South Asia Region. Report No. 17034-Nep.

Issues Related to the Implementation of GATT and SAPTA on Field Crops in Sri Lanka

H. Somapala[*]

In Sri Lanka, public debate on trade liberalization had been rather low, and consequently public awareness on the implications of the various international and regional trade agreements has been minimal. However, the policy-makers and those state and other organizations responsible for policy implementation have fully recognized the implications of these trade agreements on the Sri Lankan economy, and are active in formulating ground conditions so as to seize the opportunities available in meeting the challenges to the Sri Lankan economy, resulting from the trade agreements such as GATT (WTO) and SAPTA and others, which have a significant effect on local agricultural production and trade.

The Sri Lankan professional consideration, that the effects of Urugary Round (GATT), where the whole package of reduced tariffs and eliminated/reduced non-tariff measures together with strengthened institutional agreements will broadly benefit a net food importing country like Sri Lanka, suggests our overall readiness to accept a more liberalized trade structure, where competitiveness is the primary determinant of success. It is apparent that the Sri Lankan present commitment is an extension of the reforms on free market policies initiated the in late 70s, where lowering of tariffs and withdrawal of certain import, export and exchange control legislation were the incentives for trade enhancement.

Sri Lanka directly benefits from some of the tariff reductions allowed by the major participants of GATT (US, RC, Japan and Canada) and so the reduction of 31% (1988) agreed by Japan on agricultural products is of special significance, and similarly the 21% tariff reduction on all products granted by EU.

The expansion of trade with India and the other SAARC regional countries, consequent to the signing of the SAPTA (1995) agreement, was significant to Sri Lanka. Tariff concessions on 55 products (direct and exchange) from the consolidated list, ranging from 10-20% are available. The bulk of these products reported were noted to be raw or semi-processed agricultural products. Sri Lanka had been more accommodative and the tariff concessions up to 50 - 75% had been granted for certain products to some member countries. In 1998, under SAPTA (main items) Sri Lanka obtained a trade balance of US$ 5.77 million, after reaching an export target of 18.76 million US$. These products were obtained from the tree crops sector from small to medium sized holdings. The awareness of trade benefits such as those highlighted above is an inducement for the business community to consider the viability of agricultural crops and their products as potential trade items of relevance to economic gain, if product development intentions are extended to cover foreign markets.

The tariff reduction granted to Sri Lanka on various products of the plantation crops sector is an inducement for enhanced quality production, where realization of the importance of quality as a distinct characteristic determining market competitiveness is being seriously considered the local producers.

[*] Field Crops Research and Development Institute, Department of Agriculture, Maha Illuppallama, Sri Lanka.

The indications are that tariff liberalization is definitely inducing positive effects on our agricultural production and trade. Products obtained from the plantation sector, tree crop (perennials) sector, horticulture and even some oil crops, such as sesame (*sessamum indicum*) have made significant contributions to our foreign exchange earnings, and it is now realized that the policy directives arising from commitments to the trade agreements are inducements primarily to export concerns and related quality innovations. The other areas of relevance such as environment and resource conservation, quarantine, property rights on planting materials and seeds are gradually receiving attention of the relevant state institutions and the public.

In Sri Lanka contributions from OFCs to the national economy, however, are significant in terms of foreign exchange savings. Estimates of savings are 344,762,367 and 1,859 million Sri Lankan rupees with respect to import substitution from the production of coarse grains, grain legumes, oil seeds and condiments, respectively. Improvement of quality aspects and productivity at the farmers' field level for coarse grains, especially maize, is of significance to trade interests of Sri Lankan consumers.

Local production of maize, other millets, groundnut for confectionary purposes and even many other pulses is largely being consumed within the country and the demand is increasing especially with the needs of the animal husbandry sector. Thus tariff concessions elsewhere are a benefit to us, as a net importer of those grains, while we achieve success in increasing local production at competitive cost of production.

Consolidated Report on Effects of Trade Liberalization on Agriculture in Selected Asian Countries with Special Focus on CGPRT Crops (TradeLib)

Boonjit Titapiwatanakun and Michio Kanai[*]

Introduction

The objective of this paper is to provide a brief summary and observations of the authors regarding the implementation and the results of the Effects on trade liberalization on agriculture in selected Asian countries with special focus on CGPRT crops (Tradelib) project. This report consists of four sections or parts. The first part is a brief introduction to the Tradelib project and its implementation. The second and third parts are discussion on the institutional study and the welfare and profitability analysis of the project. The final part contains the conclusions and recommendations of the project. Basically, this report was prepared from the observations of the authors and results of the project as well as from information and statistical data collected from secondary sources.

The project in brief

The Tradelib project was formulated from the general concerns of the on going trade liberalization policies adopted by both WTO and non-WTO members. The major objectives of the project are: (i) to identify the international trade of agricultural products in the region under liberalized market conditions; (ii) to characterize the situation and prospects of agriculture in selected Asian countries with special attention to the effects of trade liberalization; (iii) to specify policy options for improving farmers' income in the process of trade liberalization; and (iv) to provide concerned policy-makers and researchers with discussions and suggestions on the above findings.

To achieve these objectives, the project was divided into two phases of study, namely (i) study of institutional and structural aspects, and (ii) study of commodity aspects. Essentially, the first study aimed for an overall review of what it is, while the second study focuses on the effects.

Ten Asian countries participated in the project. These countries may be classified according to their overall agricultural trade as importing or exporting countries. Countries falling within the first category are Japan, the Republic of Korea and Malaysia, while the second category includes countries such as China, India, Indonesia, Pakistan, the Philippines, Thailand and Viet Nam.

[*] Department of Agricultural and Resource Economics, Faculty. of Economics, Kasetsart University, Bangkok, Thailand and CGPRT Centre, Bogor, Indonesia.

Implementation of the project is based on the principal of collaborative research in which the national institution collaborates with the CGPRT center for conducting the research. Therefore, selection of commodities for study in each country very much depends upon the interest and priority of the country concerned. In general, the commodity coverage in the first phase is boarder than in the second phase. This is due mainly to the nature of comparative in depth analysis of the second phase and the time constraint. Nevertheless, rice is the common commodity selected by the participating countries in both phases. Among other commodities, maize (coarse grain) is selected by most of the countries followed by soybean. In addition to these commodities, some countries studied livestock products such pork, beef, mutton, poultry, eggs and milk as well as fish products and perennial crops (Table 1).

Table 1 Commodities selected by national experts for the first and second phase study.

	Country	Commodity
	First phase	
1.	China	Rice, maize, soybean, peanuts, frozen pork, canned food, raw silk, wheat, vegetable oils, sugar and raw wool.
2.	India	Rice, soybean, oilseeds, wheat, sugar and nuts.
3.	Indonesia	Rice, maize, soybean, sugar, rubber, coffee, tea and palm oil.
4.	Japan	Rice, maize, soybean, wheat, orange, soybean, rapeseed, beef, pork, chicken, eggs, skimmed milk powder, butter and cheese.
5.	Malaysia	Rice, palm oil, tobacco, wheat, maize, soybean, sweet potato, tapioca, pepper, logs and sawn timber.
6.	Pakistan	Rice, wheat, cotton, milk and milk product, coffee, tea and edible oil.
7.	Philippines	Rice, maize, soybean, cassava, coconut, potatoes, poultry, hogs and beef.
8.	Republic of Korea	Rice, soybean, potato, maize and wheat.
9.	Thailand	Rice, maize, cassava, soybean, rubber, shrimp, chicken and dairy products.
10.	Viet Nam	Rice, coffee, tea, rubber, cashewnut and groundnut.
	Second phase	
1.	China	Rice, wheat, maize, soybean, sweet potato, potato, other grains, pork, beef, mutton, poultry, egg, milk and fish.
2.	India	Rice, maize, chickpea and rapeseed-mustard.
3.	Indonesia	Rice, maize, soybean, potato and cassava.
4.	Japan	Rice, sugar, potato, sweet potato and beef.
5.	Malaysia	Rice, palm oil and tobacco.
6.	Pakistan	Rice, maize and wheat.
7.	Philippines	Rice and maize.
8.	Republic of Korea	Rice, soybean, ginseng and onion.
9.	Thailand	Rice, maize, soybean, milk and milk products.
10.	Viet Nam	Rice, coffee, tea and groundnut.

Institutional study

Before discussing on the results and issues of the institutional study, it is noteworthy to explain the meaning of trade liberalization in the project. In fact, trade liberalization covers many policies and measures that are either directly or indirectly related to trade which are adopted by the countries concerned as well as by major importing and exporting countries in the world markets. For instance direct policy includes tariff and non-tariff and any measures that are barriers to trade, while indirect policies include policies or government intervention starting from the farm level to wholesale and retail levels (e.g. production and input subsidies, production control, market and price policies, etc.) and policies such as direct foreign investment policy, foreign exchange and fiscal policies.

It is quite obvious that the effects of trade liberalization on agricultural trade are, indeed, the results of many direct policies and indirect as well as interactions of all the aforementioned policies implemented by countries concerned. Therefore, from a practical research point of view, the TradeLib project embraced almost all aspects of the trade liberalization policies in the institutional study, whereas in the welfare and profitable analysis more specific trade policies are emphasized.

Status of trade-related international organizations and multilateral economic groupings

One driving force of trade liberalization policies of a country is the commitment under the international trade organization and multilateral economic grouping. After the Second World War, the General Agreement on Tariffs and Trade (GATT) and the World Trade Organization (WTO) have played the most significant role in world trade. However, within the Economic and Social Commission for Asian and the Pacific (ESCAP) region there are at least two important economic groupings that emerged during the late 1980s and played a notable role in trade among the member countries. These economic grouping are the Asian Pacific Economic Cooperation (APEC) and the Association of South East Asian Countries (ASEAN) Free Trade Area (AFTA).

Within each of the economic groupings, the member country is committed to liberalized trade and providing special trade privileges for other member countries. The details of commitments and privileges are discussed elsewhere, however, the commitment and privileges with AFTA are somewhat greater than those of APEC, which is more in line with the WTO.

All participating countries except India and Pakistan are members of APEC. Only China and Viet Nam are not yet members of WTO. Five out of the ten countries are members of AFTA, i.e. Indonesia, Malaysia, the Philippines, Thailand and Viet Nam. (Table 2).

Table 2 Membership of the TradeLib countries in trade-related international organizations.

	WTO	APEC	AFTA
Japan	+	+	-
The Republic of Korea	+	+	-
Malaysia	+	+	+
Indonesia	+	+	+
The Philippines	+	+	+
Thailand	+	+	+
India	+	-	-
Pakistan	+	-	-
China	-	+	-
Viet Nam	-	+	+

+ = Member and - = Non-member.

Development of trade liberalization

Trade liberalization policies of each country very much depend upon the state of socio-economic development of the country and the share of international trade of the country's gross national production as well as the comparative advantage of the country.

Nevertheless, domestic and international political pressure faced by the country concerned as well as multilateral accords also have certain impacts on the country's trade liberalization policies. Among the ten participating countries the starting point of trade liberalization policies varies and it could roughly divided into periods as follows.

Starting of import liberalization late 1950s – 1970s.

By and large, Japan started trade liberalization policies on certain agricultural commodities. At least two reasons explain the liberalization policies. First, the natural resources constraint faced by Japan could only be solved through international trade. Second, Japan was able to achieve rapid and sustainable economic growth at the beginning of 1955. In addition, the main liberalized agricultural commodities included coarse grain (maize and sorghum), soybean, oil meal, coffee and cocoa bean, poultry meat (frozen), raw sugar and refined sugar.

During this period, two participating countries, which are classified as agricultural importing countries, concentrated very much on import substitution and export promotion policies. For example, in the 1950s, the Republic of Korea adopted trade policy to protect its domestic industry, while in the 1960s, policy was shifted to export promotion. As for Malaysia, the national policies focused more on growth and diversification policies as well as protectionism policies on selected sectors.

In the same period, production and input oriented policies were more or less the major emphasis for those agricultural exporting countries such as India, Indonesia, the Philippines and Thailand. China, the biggest country, was in the process of domestic reform and it was basically a closed economy.

Starting of opening up and WTO (1980 – 1999)

In fact, this period may be divided into two periods namely 1980 – 1992 or the pre WTO period and 1993 – 1999 the WTO period. The following discussion will focus on the so-called pre WTO period.

The expansion and economic growth of Japan enhanced the import role in international trade. As a result, Japan was requested by major developed trading partners such as US, Canada, Australia and New Zealand as well as economic groupings like the EU and ASEAN to further liberalize import of agricultural products. In addition, Japan had to open up it agricultural markets to comply with the WTO commitments. As for the Republic of Korea, the agricultural trade policy has gradually started to liberalize in line with the WTO commitment.

During this period most of the countries have progressively opened up their agricultural trade, especially in imports of agricultural products. For example Malaysia slightly liberalized its rice market by decreasing its self-sufficiency on rice. Pakistan imported more vegetable oils. Thailand imported maize and more soybean and soymeal. Indonesia has slowly restructured and liberalized its imports of agricultural products. Despite internal political and economical problems, the Philippines has struggled to liberalize its trade policies.

During 1977 – 1979, the most significant trade liberalization and reform, which had strong impacts on the agricultural trade in the region (ESCAP region) was the opening up of the Chinese economy and the gradual liberalization of trade policies of India. The rates of liberalization of these two countries are somewhat different: China has to speed up its liberalization policy so as to join WTO as soon as possible, while India has been very cautious. Nevertheless, both huge countries have had very strong impacts in the world trade of agricultural commodities whenever they entered the market.

Awareness of WTO

The establishment of WTO in 1994 with the enforcement of commitments enacted in 1995 marked the starting point of a new era of world agricultural trade. The details of commitments are discussed elsewhere.

Attempts have been made to assess the awareness of concerned parties including government officers, private firms and farmers. The assessment was based on observations of

the authors during review visits in each participating country. The awareness of WTO of government officers, the private sector and farmers in the developed and agricultural importing countries such as Japan and Republic of Korea is very strong. In general, the awareness of government officers in the ASEAN countries (except Viet Nam), China, India and Pakistan is strong, while that of the private sector is moderate. Nevertheless, the awareness of farmers is, generally, very weak or weak in most of the countries (Table 3).

Table 3 Awareness of the existence and commitments of WTO.

Country	Very Weak	Weak	Moderate	Strong	Very Strong
1. China					
Govt. officer				X	
Private sector		X			
Farmers	X				
2. India					
Govt. officer				X	
Private sector			X		
Farmers	X				
3. Indonesia					
Govt. officer				X	
Private sector			X		
Farmers	X				
4. Japan					
Govt. officer					X
Private sector					X
Farmers					X
5. Malaysia					
Govt. officer				X	
Private sector			X		
Farmers		X			
6. Pakistan					
Govt. officer				X	
Private sector			X		
Farmers	X				
7. Philippines					
Govt. officer				X	
Private sector			X		
Farmers		X			
8. Rep. of Korea					
Govt. officer					X
Private sector					X
Farmers				X	
9. Thailand					
Govt. officer				X	
Private sector			X		
Farmers		X			
10. Viet Nam					
Govt. officer		X			
Private sector		X			
Farmers	X				

Source: Observation of the authors.

It is worth pointing out that the strong or very strong awareness of government officials of WTO has not yet been reflected in the restructuring of concerned government agencies. Restructuring has been more or less under consideration in most of the countries, while it has been rather strong in Japan.

There have been programs on disseminating information and familiarizing WTO in some countries through workshops and seminars, especially at the central level among government officers and the private sector. However, the Asian financial crisis has overshadowed awareness of WTO in countries like Thailand, Malaysia, Indonesia and the Philippines.

Existing infrastructure

One important factor that determines the benefit of a country under free trade is the existing physical infrastructure of the country. The major physical infrastructure includes road, railroad, and river, air and port (sea or river ports). The authors assessed the state of development of this infrastructure in each of the participating countries. Most of the infrastructure in Japan and the Republic of Korea is well developed or developed, while that in the Philippines, Pakistan and Viet Nam is mostly under developed.

The existing infrastructure in Indonesia, Malaysia and Thailand is mostly in the developing state, however, road and air infrastructure in Thailand is better developed. In general, large countries like China and India are still developing their infrastructure (Table 4).

As a matter of fact, development of infrastructure in each country very much depends upon the state of economic development and the endowed natural resources e.g. rivers and sea coast. A good case in point is the development of infrastructure in the Philippines which has been almost standing still since the economic crisis in the 1980s.

Trade indicators

A trade matrix for the ten participating countries in 1992 and 1996 was constructed to serve as a rough indicator of trade liberalization efforts among these countries as a whole. The value of total trade among these countries increased from US $140,793 million in 1992 to 273,388 million in 1996 or an increase of almost 100%. Japan is the biggest trading country exporting more than 43% and 39% and importing more than 35% and 32% of the total in 1992 and 1996, respectively, followed by the Republic of Korea at 18-17%, China at 12-15%, and Malaysia, Indonesia and Thailand at 6-10%. The Philippines, Pakistan and Viet Nam were relatively small trading partners that traded around 1% to 2% of the total in the same period (Tables 5 and 6).

In terms of percentage share of export to the total value of trade among the ten countries between the two periods (1992 to 1996), Japan decreased from 43% to 39%, while Indonesia also deceased from 11% to 8%. The Republic of Korea, Malaysia, the Philippines, India, Pakistan and Viet Nam maintained the same level at 15%, 8%, 2%, 2%, 1% and 1%, respectively. However, China increased substantially from 17% to 12%, while Thailand slightly increased from 6% to 7% (Tables 5 and 6).

As far as the percentage share of import in the total value of trade is concerned, Japan's import share decreased from 35% in 1992 to 32% in 1996, and the Republic of Korea also decreased from 18% to 16%. This may due to the economic recession in Japan. Thailand, Malaysia, Indonesia, India, and Pakistan were more or less constant at 10%, 9%, 6%, 2% and 2%, respectively. China was the only country that had a significant increase from 12% to 15%, and Viet Nam experienced a tremendous increase from 1% to 2%. Most of the imports of these two countries came from Japan, the Republic of Korea, Indonesia, Malaysia, Thailand and the Philippines.

Based on the above percentage changes between the two periods, one can say that the process of trade liberalization has benefited almost all ten countries. Nevertheless, it is premature to conclude that all this increase is due the WTO trade liberalization movement.

Table 4 Existing infrastructure related to international trade as of 1998.

Country	Under Developed	Developing	Developed	Well Developed
1. China				
- Road	X			
- Railroad	X			
- River		X		
- Air		X		
- Port		X		
2. India				
- Road		X		
- Railroad			X	
- River		X		
- Air		X		
- Port		X		
3. Indonesia				
- Road		X		
- Railroad		X		
- River		X		
- Air		X		
- Port		X		
4. Japan				
- Road				X
- Railroad				X
- River	X			
- Air				X
- Port				X
5. Malaysia				
- Road			X	
- Railroad			X	
- River		X		
- Air			X	
- Port			X	
6. Pakistan				
- Road		X		
- Railroad	X			
- River	X			
- Air		X		
- Port		X		
7. Philippines				
- Road	X			
- Railroad	X			
- River	X			
- Air		X		
- Port		X		
8. Rep. of Korea				
- Road				X
- Railroad				X
- River			X	
- Air				X
- Port			X	
9. Thailand				
- Road			X	
- Railroad		X		
- River		X		
- Air			X	
- Port		X		
10. Viet Nam				
- Road	X			
- Railroad	X			
- River	X			
- Air		X		
- Port	X			

Source: Observation of the authors.

Table 5 Trade matrix among the ten countries in 1992 (million US$).

Destination	Japan	Rep. of Korea	Malaysia	Indonesia	Philippines	Thailand	India	Pakistan	China	Viet Nam	Total
Origin											
Japan		17,793	8,115	5,576	3,515	10,360	1,486	1,295	11,926	450	60,516
Rep. of Korea	11,599		1,136	1,935	746	1,532	438	372	2,654	436	20,848
Malaysia	5,476	1,396		507	478	1,489	431	369	771	50	10,967
Indonesia	10,761	2,083	488		181	353	70	81	1,396	191	15,604
Philippines	1,745	176	128	40		98	9	1	114	30	2,341
Thailand	5,686	533	842	283	155		65	71	386	77	8,098
India	1,605	195	212	155	61	283		57	158	19	2,745
Pakistan	560	169	75	94	27	114	135		54	3	1,231
China	11,679	2,405	645	471	210	895	158	551		106	17,120
Viet Nam	868	57	127	33	16	80	68	1	73		1,323
Total	49,979	24,807	11,768	9,094	5,389	15,204	2,860	2,798	17,532	1,360	140,793

Source: Foreign Trade Statistics of Asia and the Pacific 1997-1998 Edition, ESCAP, UN, New York 1998.

Note: Figures are exports from countries of origin to countries of destination, except Viet Nam, where figures were not available. Figures of Viet Nam are imports from other countries.

Table 6 Trade matrix among the ten countries in 1996 (million US$).

Destination	Japan	Rep. of Korea	Malaysia	Indonesia	Philippines	Thailand	India	Pakistan	China	Viet Nam	Total
Origin											
Japan		29,328	15,328	9,059	8,404	18,263	2,432	1,156	21,887	1,139	106,996
Rep. of Korea	15,767		4,333	3,198	1,906	2,664	1,177	358	11,377	1,600	42,380
Malaysia	10,565	2,407		1,218	938	3,203	1,206	645	1,909	323	22,414
Indonesia	12,885	3,281	1,110		688	823	531	125	2,057	364	21,864
Philippines	3,671	371	687	142		780	36	18	328	130	6,163
Thailand	10,212	1,219	2,593	1,095	660		197	126	1,890	468	18,460
India	2,006	518	331	592	184	447		157	615	118	4,968
Pakistan	606	273	39	139	31	97	42		119	12	1,358
China	30,886	7,500	1,370	1,428	1,015	1,255	686	623		842	45,605
Viet Nam	2,018	232	150	204	197	66	2	2	309		3,180
Total	88,616	45,129	25,941	17,075	14,023	27,598	6,309	3,210	40,491	4,996	273,388

Source: Foreign Trade Statistics of Asia and the Pacific 1997-1998 Edition, ESCAP, UN, New York 1998.

Note: Figures are exports from countries of origin to countries of destination, except Thailand and Viet Nam, where figures were not available. Figures of Thailand and Viet Nam are imports from other countries. The figure of export from Thailand to Viet Nam is for 1995.

Welfare and profitability analysis

This section begins with a brief discussion on the methodologies employed, the limitations of the methodologies and the difficulties encountered. Then the results of the welfare analysis and the partial budget analysis are summarized and discussed.

Simple welfare analysis

Simple welfare analysis was employed to analyze the effects of trade liberalization of the selected products in each participating country. Essentially, the analysis consists of the following steps:

(1) Estimating the own price elasticity of demand and supply, the price elasticity of price transmission between the two market levels e.g. international price and domestic price, or wholesale price and farm gate price (or price received by the farmer);

(2) Computing the consumer surplus using the estimated demand elasticity and the new price level after trade liberalization (e.g. tariff decreased, world price increased);

(3) Computing the farm gate price using the estimated elasticity of price transmission and the new wholesale price in (2);
(4) Computing the producer surplus using the estimated supply elasticity and the new farm gate price in (3); and
(5) Computing the difference between the consumer and producer surplus or the approximate net welfare gain or loss.

The computed approximate net welfare gain or loss is used as an indicator of the effect of trade liberalization on the selected commodity.

The simple welfare analysis suffered at least four limitations. First, it is a static equilibrium analysis in which the changes and dynamic impacts of trade liberalization as a whole are not considered. Second, the initial level of consumption and production has a significantly effect on the estimated magnitude. Third, substitution among commodities by the consumers is not considered. Fourth, the quality of the commodity imported is assumed to be the same as that produced domestically.

Partial budget analysis

Partial budget analysis is used to assess the profitability of the selected crop or commodity after trade liberalization policies were implemented. The application of this method started with the estimation of changes in input prices after liberalization and the farm gate price, which was obtained from the simple welfare analysis, then gross return is computed and compared with the initial level.

The simplicity of partial budget analysis leads to a few limitations. First, productivity changes after trade liberalization are not included. Second, substitution among inputs is neglected. And third, structural changes in both markets and marketing after trade liberalization are not included in the analysis.

Lack of data

Problems on lack of data are quiet common. Some countries did not have time series data sufficient for estimating the equations, while some countries did have a good database to perform partial budget analysis. As a matter of fact, one country had to drop the analysis of the selected crop, which is an import crop of the country, due to lack of data.

Estimation of demand and supply

The statistical estimation of demand and supply equations was a tedious problem. In some cases, the estimated equation was statistically sound, but the derived price and elasticities were rather unusual and even contradicted basic economic theory. Some countries had to drop the intended demand or supply shifter variables and income variables so as to obtain meaningful estimated elasticities, while some countries had to use the elasticities estimated by previous studies which are well accepted. In fact, one country could not estimate the demand and supply functions, because of intensive government intervention in the production and marketing of the selected crop.

Estimation of elasticity of price transmission

The elasticity of price transmission is derived from the estimated price linkage equations, which were difficult to estimate. The first problem was lack of data. The second problem was the sign of the estimated coefficient. The third problem was the magnitude of the

derived elasticity of price transmission. The fourth problem was government price control measures, which have been implemented for years.

Welfare analysis

Welfare analysis of the selected commodity or crops was conducted by each participating country. Rice is the common commodity selected by all countries. Among the ten countries, the rice importing countries are Japan, Indonesia, Malaysia and the Republic of Korea. All estimations confirm the conventional theory that there is consumer surplus gain and producer surplus loss and the net difference is net welfare gain. However, for the case of Indonesia and the Philippines, which assumed scenarios of decreased and increased import tariff, respectively, the results show that there is a producer surplus gain and consumer surplus loss and a net welfare gain for Indonesia, while the Philippines was the opposite (Table 7).

China, India, Pakistan, Thailand and Viet Nam are rice exporting countries. The welfare analysis is in line with the expectation that is there is producer gain and consumer loss. However, the net welfare of China and India is negative or a loss, while that of Pakistan, Thailand and Viet Nam is positive or a gain. This may due to the fact that China and India are big countries and consume a large amount of rice domestically (Table 7).

Maize or corn is the second common crop that was selected for welfare analysis. Indonesia, Pakistan, the Philippines and Thailand selected maize as an import commodity; the estimated consumer and producer surplus showed the same direction, that is gain and loss, respectively. However, only Pakistan's net welfare was negative, while the rest were positive. China and India evaluated maize as an export commodity. However, China estimated a consumer surplus gain and a producer surplus loss with a net welfare loss, while India was the opposite (Table 7).

Soybean was selected as an import commodity by China, Indonesia, the Republic of Korea and Thailand. All these countries estimated a producer surplus loss and a consumer surplus gain. However, both China and Thailand estimated a net welfare loss, while that of Indonesia and the Republic of Korea was positive (Table 7).

For other commodities welfare analysis is according to the expected impact of trade liberalization. For example, Malaysia, the largest palm oil exporting country, estimated a producer surplus gain and a consumer surplus loss with a net welfare gain after trade liberalization. Thailand and Viet Nam, which are the major rice exporters in the world market, expected the impact of trade liberalization would generate a positive net welfare gain (Table 7).

Partial budget analysis

In general all partial budget analyses revealed that for the export commodities there will be an increase in farmers' return or gross margin after trade liberalization, except in the case of maize in China. For the import commodities, trade liberalization will decrease the return of farmers, except in the case of maize in Pakistan and Thailand.

It should be pointed out that the yield of the selected farms or average yield of the selected area has a significant impact on gross margin of farmers after trade liberalization. There is a strong possibility for an imported commodity to have an increased gross margin when trade liberalization results in a decreased major input price (e.g. fertilizer) and the selected location has a higher than average yield.

Table 7 Results of the welfare analysis of the selected commodities.

Country and Commodity	Assumption Import (IM) or Export (EX)	Producer's Surplus (1)	Consumer's Surplus (2)	Net Surplus Difference between (1) and (2)
Japan				
-Rice	IM	L	G	G
Rep. of Korea				
-Rice	IM	L	G	G
-Soybean	IM	L	G	G
-Onion	IM	L	G	G
-Ginseng	IM	L	G	G
Malaysia				
-Rice	IM	L	G	G
-Palm Oil	EX	G	L	G
-Tobacco	IM	L	G	G
Indonesia				
-Rice (TD)	IM	L	G	G
-Rice (PI)	IM	G	L	L
-Maize (TD)	IM	L	G	G
-Maize (PI)	IM	G	L	L
-Soybean (TD)	IM	L	G	G
-Soybean (PI)	IM	G	L	L
-Potato (TD)	IM	L	G	G
-Cassava (PI)	EX	G	L	L
The Philippines				
-Rice (TI)	IM	G	L	L
-Maize	IM	L	G	G
Thailand				
-Rice	EX	G	L	G
-Maize	IM	G	L	G
-Soybean	IM	L	G	G
-Milk	IM	L	G	G
India				
-Rice	EX	G	L	L
-Maize	EX	G	L	G
-Rapeseed/Mustard	IM	L	G	G
Pakistan				
-Rice	EX	G	L	G
-Maize	IM	G	L	L
-Wheat	IM	G	L	L
China				
-Rice	EX	G	L	L
-Maize	EX	L	G	L
-Wheat	IM	L	G	G
-Other Grains	EX/IM	L	G	L
-Soybean	IM	L	G	L
-Potato	EX	L	L	L
-Sweet Potato	EX	L	L	L
-Pork	EX	G	L	G
-Beef	EX	G	G	G
-Mutton	IM	L	G	G
-Poultry	EX	G	L	G
-Eggs	EX	G	G	G
-Milk	EX	L	G	G
-Fish	EX	G	G	G
Viet Nam				
-Rice	EX	G	L	G
-Coffee	EX	G	L	G
-Tea	EX	G	L	G
-Groundnut	EX	G	L	G

Note: PI = Price increase; TD = Tariff decrease; TI = Tariff increase; G = Gain; L = Loss.
Remarks: For China EX and IM show a net exporter or importer of the commodity as of 1998, respectively.

Conclusions and recommendations

This section starts with conclusions of the studies followed by some observations and recommendations drawn from the country studies.

Conclusions

The overall review of the institutional study by each participating country depicted a trend of domestic trade liberalization policy starting as early as the 1950s in Japan, then followed by the developing countries in the 1980s. This is evidence showing that, as a country steps into the road of development and opens up its economy, it must liberalize its trade policy in line with international practice. However, the pace of liberalization is determined both by domestic and international politics and negotiations, which are, to a great extent, rather difficult to anticipate.

At any rate, the benefits from trade liberalization could not fully materialize without the development of trade-related infrastructure. As far as the physical infrastructure is concerned, developed countries like Japan and the Republic of Korea have comparatively well developed infrastructure including roads, railroads, airport and sea and river ports. For the developing countries, the infrastructure somewhat lags behind and needs to be developed. Furthermore, the trade-related infrastructure such as government agencies, banking system, import and export handling procedures were not greatly detailed in all the studies.

The trade matrix among the ten countries showed an increase in total value of trade from US$ 140,793 million in 1992 to US$ 273,388 million in 1996. In addition, the overall results of the country studies on welfare analysis reveal that the trade liberalization process in each country has contributed a net welfare gain to the economy. However, it is difficult to establish that the trade liberalization was due to the WTO commitment or internal policies. It would be safe to say that, at present, it is still premature to assess WTO trade liberalization in general.

The profitability analysis using partial budgets showed that the effect of trade liberalization on import commodities was negative, while that on export commodities was positive. However, differences in the location and the yield of the commodity may lead to different results.

Structural changes of government

It is quite obvious that under WTO there are certain agreements that require good cooperation and rapid response of the member countries. For example the agreement on sanitary and phytosanitory measures (SPS measures) and the agreement on technical barriers to trade (TBT), are very important to the agricultural sector as whole. However, the implementation of these agreements cuts across many ministries within the conventional administration of a country. The implications of these two agreements can generate both positive and negative effects on agricultural trade of the countries concerned. However, it seems that the restructuring of government agencies concerned to effectively deal with these agreements has still not materialized.

Product quality and environmental issues

Product quality and environmental issues can be a barrier to trade. In some cases, there is an intrinsic quality difference between the imported product and the domestically produced one, for example domestically-produced beef and imported beef in the Japanese market. Quality issues can also be found in the international rice market. Each variety of rice, to a great extent,

can not be substituted, such as Basmati rice, and IRRI rice. In fact, the usages of rice determine the rice price. Thus the price of rice for human consumption is much higher than that for processing uses. All these issues deserve closer investigation.

Environmental issues in trade are not considered in almost all the country studies. There is a tendency for environmental issues to become major issues in agricultural trade in the years to come. The current issues on genetically modified organisms (GMO) in agricultural commodities have created more and more public awareness in both agricultural importing and exporting countries.

Large country

In all the ten country studies, the small country assumption is implicitly applied. However, countries like China and India are, indeed, large countries when they import a basic staple commodity such as rice in the world market. In fact, it would be a totally different scenario, if these big countries relaxed their food security and self-sufficiency objectives of basic staple foods.

Price instability

The intrinsic problem in commodity trade is price instability or fluctuation. Many government interventions and measures have been set up to achieve price stability. Some of these measures are, more or less, prohibited under the WTO commitments. Therefore, there is a need for new and feasible stabilization measures to be set up in those commodity exporting countries.

In the past, there were cases where commodity prices fluctuated more than 100%, which may be more than the decrease in tariff on some commodities. One factor causing price fluctuation is exchange rate fluctuation. There are cases where exchange rate fluctuation changed a country from an importing country into an exporting country as in the case of Indonesia. The issue is whether trade liberalization generates a more stable commodity price or not. If trade liberalization creates greater price instability in internationally traded commodities, then what would be the impact on developing countries that depend on the export of a few basic commodities?

Recommendations

There many recommendations advocated in the country studies. Some of the recommendations are quite general and some are quite specific for the country concerned. All these recommendation can be classified into the following categories:

(a) Production
- -to increase productivity and efficiency
- -to increase investment in irrigation
- -to increase crop diversification
- -to establish some system of direct payment to support producers in less-favored areas

(b) Marketing
- -to promote internal liberalization of marketing
- -to promote standardization of farm products both domestically and internationally
- -to enhance efforts for market diversification
- -to construct better distribution systems

(c) Export and import

-to diversify trading countries, including overseas production development to secure food grain import
-to increase private sector participation in trade

(d) Infrastructure
-to improve both internal and external transportation facilities
-to improve grain handling facilities
-to establish new and additional infrastructure in new production areas

(e) Technology
-to improve methods of processing, storage and preservation
-to improve post-harvest technology
-to introduce new technological initiatives that conserve the environment and are appropriate for producing areas

(f) Information
-to establish marketing information systems in producing areas and marketing regions
-to establish information networks for export

(g) Human resources
-to increase human resource development including farmers and related private and public personnel
-to strengthen education to producers for utilizing agricultural information

(h) Administration
-to reform administrative procedures
-to strengthen institutional support especially research, extension and technological transfer

(i) Research and development (R&D)
-to promote R&D of seeds of major crops and alternative crops
-to improve technological research and control of plant diseases

Closing Address

Haruo Inagaki[*]

I am very pleased to acknowledge that the four-day regional workshop on "Effects of Trade Liberalization on Agriculture in Asia" is now successfully completed. I would like to express my sincere appreciation to all of the speakers, commentators, moderators and all other participants for your active discussions and significant contributions to the workshop.

In the beginning, we had a very comprehensive and enthusiastic keynote speech by Dr. Keiji Ohga on the current status of trade liberalization and world food prospects in relation to food security. Then, the results achieved in the intensive and diligent in-country studies were reported from ten countries who participated in the "TradeLib" project. After the field tour to the Research Institute for Ornamental Plants and other sites near the Puncak, we enjoyed several additional reports related to trade liberalization and agricultural conditions from six other countries that were not involved in the project. In the final part, we had a consolidated discussion by Dr. Boonjit Titapiwatanakun, on the wide scope of achievements and information harvested in the project. The plenary discussion also covered a wide range of issues related to the project including an array of policy recommendations.

As a whole, it was very impressive to me that all of the countries, regardless of the size of economy and the level of development, are striving to prepare for the new era of free trade. The reports and discussions encourage us to further prepare for mitigating the adverse impacts of trade liberalization on both food producers and consumers and, at the same time, to proceed for amplifying the positive impacts, namely the benefits of trade liberalization. In order to promote necessary countermeasures in each country, a wide range of policy recommendations were proposed ranging from enhancement of crop productivity and institutional arrangements to improvement of infrastructure and information networks.

Most of these findings and policy recommendations are not new nor specific but almost common or traditional. However, since they were drawn after academic and objective analyses, I certainly believe they have authentic value for further discussion and reference in research and policy planning. I am very confident through this workshop in saying that our member countries here in Asia have sufficient potential to cope with the negative impacts of trade liberalization and to enjoy the positive impacts in the coming 21st century by applying those policy recommendations proposed. Now, I would like to respond to that serious question raised by Dr. Keiji Ohga in his keynote discussion "Can Asian agriculture survive?" by saying, "Yes, we can survive!"

At the closing this regional workshop, I would like to seriously request all of you, the ten project-participating countries in particular, bring back all of the information and discussions you had here to your countries and institutes and effectively utilize them to contribute to your countries and to the further development of Asian agriculture.

In this connection, I am pleased to inform you that I am proposing an idea to the forthcoming advisory and executive boards of the CGPRT Centre to enable the Centre to furnish support for the ten project-participating countries to organize individually a kind of in-country seminar or workshop preferably in the early half of next year in order to discuss and disseminate those findings and policy recommendations yielded in the country studies under the "TradeLib" project. Upon receiving the endorsement of the boards and completion of the

[*] CGPRT Centre, Bogor, Indonesia.

publications, I will make contact with the local offices in those countries as well as the national experts of the project. In this case, I certainly expect your full cooperation. For those non-participating countries, the Centre will consider the issue separately upon request from any of these countries.

Now, I think it is the time to close this Regional Workshop on "Effects of Trade Liberalization on Agriculture in Asia" which lasted for four days here in Bogor, Indonesia.

Finally, I would like to thank all of you again for your active participation and cooperation throughout the meeting.

Appendix 1 Fundamental Principles of Japanese Agricultural Policy Reform and the Basic Law on Food, Agriculture and Rural Areas

Basic principles of agricultural reform

Japan will fundamentally review the postwar agricultural policies based on the current Agricultural Basic Law from the viewpoint of the nation as a whole and will reconstruct new policies, to ensure a stable food supply and to fully fulfill the multifunctionality that citizens seek from agriculture and rural areas: sustainable development and the progress of agriculture and promotion of rural areas. A draft version of the Basic Law on Food, Agricultural and Rural Areas, which is a fundamental policy, is now being discussed in the Diet. Japan will proceed to establish the Basic Law in line with the agricultural policy reform program and will steadily promote highly transparent and efficient policies.

Food security and stable food supply mainly based on increase of domestic agricultural production

Increase of domestic agricultural production

Japan will promote the rise of productivity by reforming the agricultural structure, by promoting the right crops in the right place through the use of regional conditions or characteristics and close links between domestic farmers and the consumers/food industry.

Japan will also set a target for the food self-sufficiency rate in the form of a guideline to call for efforts from the people concerned and to promote the policy on an increase in domestic agricultural production and the improvement of the dietary life. In order to achieve its target, it will work in collaboration with the parties concerned. As one measure, Japan will examine how land-extensive farming where the main usage of land is paddy fields ought to be operated in terms of market-oriented distribution and price forming.

Securing stable imports and a proper stockpile.

Japan will maintain a good relationship with food exporting countries and will try to understand properly the food supply/demand situation in the world in order to secure stable and smooth food imports.

Japan will stockpile principal food appropriately and efficiently in preparation for a possible food shortage.

Establishing a crisis management system for unforeseen situations

The Ministry will establish a crisis management system, which will ensure the prompt collection and analysis of information, adequate production conversion, price monitoring and secured distribution in order to maintain a stable supply of minimum food for unforeseen situations.

International cooperation for food and agriculture

Japan will strengthen and improve technical and financial assistance, such as the dispatch of experts to developing countries or the acceptance of trainees, and will utilize the structure of food assistance to contribute to the stabilization of global food supply/demand.

Establishing the food policy focusing on consumer viewpoint

Securing food safety and quality and improving and strengthening the labeling/standardization of food

Japan will strengthen measures to secure safety and quality of food, including that of imported food to ensure food safety and reliance of consumers, and will promote the provision of information on diets in everyday life and in education. The Ministry will also improve and strengthen the food labeling/standardization system to help consumers select the proper products.

Strengthening the management structure of the food industry and distributing food efficiently

Japan will strengthen the constitution of food industries, which play the important role of supplying people with food, by strengthening its co-operation with domestic agriculture and enhancing the management basis. Japan will also streamline and revitalize food distribution by improving and strengthening the wholesale market functions and systems.

Securing and improving the production infrastructure including farmland and water resources

Securing good farmland

Japan will ensure that farmland, which is the most basic resource for agricultural production, remains in optimal condition and will exploit it bearing in mind the views of the general public. Japan will also promote an integrated use of farmland by motivated farmers to foster efficient and stable agricultural management for the purpose. Japan will review the systems and projects related to farmland in order to do so.

Improving the agricultural production infrastructure

In order to secure a stable food supply and raise agricultural productivity, Japan will promote and maintain improvements to the agricultural production infrastructure for farmland and water resources, such as the improvement of irrigation/drainage facilities and larger division fields, based on the Land Improvement Long-term Plan, in accordance with regional geographical conditions, without forgetting the necessity to preserve the environment. At the same time, Japan will promote appropriate improvement and renewal of the land improvement facilities having public functions, such as the preservation of the national land and environment, and will examine the measures for strengthening public management.

In addition, considering the changes in socio-economic conditions, such as the changing agricultural structure, diversified needs and increasing concerns over the environment, Japan will comprehensively review the agricultural land improvement system.

Securing and fostering the workforce

Securing a diverse workforce

Japan will secure and foster farmers by every possible means and will promote various forms of sound management including corporate management in line with regional situations. For this purpose Japan will review all related systems and operations.

Enhancing the position of women in rural areas

Japan will promote further participation by women in rural areas in farm management and the local communities and will provide an environment that will help local women fully demonstrate their abilities bearing in mind the recent low fertility rate and aging society.

Clarifying the roles of elderly farmers and promoting welfare measures

Japan will provide an environment in which elderly farmers can engage in agricultural activities by using their skills and ability, thereby giving them something to live for, and will establish a welfare system to support elderly people on a community basis.

Stabilizing and developing farm management

Fulfillment of price forming which contributes to the increase of domestic agricultural production and measures to stabilize management

In order to increase domestic agricultural production in line with demand, Japan will review the entire price policy so that farm product prices can properly reflect the supply/demand conditions. In particular Japan will review price formation of land-extensive farming for wheat and soybeans.

Japan will take income-related measures to alleviate the impact of price decline on farm management in response to the review of the price policy so that motivated farmers will not to be affected by the substantial drop in prices.

By considering reform of the individual price policy with regard to commodities and to implementing farm management stabilization measures, Japan will also examine the introduction of farm management stabilization measures covering the entire farm management of motivated farmers, as a unit rather than focusing on individual commodities.

Enhancement of farm management policies

Japan will take intensive measures in favor of motivated farmers to support efficient and stable farming with a good sense of management demonstrating creative and original ideas. Japan will also introduce measures that systematically cover all management factors, including financing, employment and technology.

Development and dissemination of technology

Japan will focus its efforts regarding the development and dissemination of technology on such challenges as those substantially increasing agricultural productivity, improving the quality and safety of farm products and the security and fostering of the workforce. For this purpose, Japan will enhance and strengthen technology development by clearly indicating the technology development goals for the whole nation and by focusing its efforts on important

fields based on research strategy. Japan will also review extension programs from the viewpoint of efficient and effective operations, and will develop programs that deliberately focus on specific farmers to meet their actual farm management conditions.

Fulfillment of the natural cyclical function inherent in agriculture

Japan will encourage a systematic transition towards more desirable agricultural production methods and to promote the appropriate management of livestock faeces and the recycling of organic resources by introducing new legislation for the purpose of fulfilling the natural cyclical function inherent in agriculture and of achieving sustainable development of agriculture.

In addition, Japan will examine policies concerning the environmental functions of agricultural production, considering the policy trends in other countries and future developments in international rules.

Enabling agriculture and rural areas to fulfill their multi-functionality

Better understanding and the proper evaluation of the multi-functionality of agriculture and rural areas

Agriculture and rural areas not only supply food but also display multi-functionality, such as flood prevention and the fostering of water resources to protect people's lives and properties, including that of urban residents. Japan will, therefore, provide information and develop extension/education activities so that such multi-functionality will be properly understood and fairly evaluated by the general public.

To revitalize hilly and mountainous areas, Japan will:

- promote unique agriculture and forestry, making the most of the regional geographical conditions; promote integral efforts to preserve and develop agricultural and forest land; and encourage the settlement of people through comprehensive construction of the living infrastructure, thus revitalizing hilly and mountainous areas, which play a significant role as a breakwater to protect people's lives and properties, including those of urban residents living downstream of rivers; and
- examine seriously the implementation of direct payments from fiscal year 2000 in order to prevent the abandonment of cultivation and to secure the multi-functional roles in hilly and mountainous areas: while achieving consistency with current policies.

Review of agricultural organizations

Japan will clarify the roles of the organizations, including agricultural co-operatives, agricultural committees, agricultural mutual relief associations and land improvement districts, and will strive to simplify and rationalize the organizations in order to streamline operations.

Japan will also take measures to strengthen co-operation among the organizations, including forest co-operatives and fishery co-operatives, according to regional conditions.

The Basic Law on Food, Agriculture and Rural Areas (Draft)

Chapter I General Provisions

(Objective)

Article 1

The objective of this Law is to stabilize and improve people's lifestyle and to develop the national economy through comprehensively and systematically implementing policies on food, agriculture and rural areas by means of establishing basic principles and basic matters for realizing them and clarifying the responsibilities of the state and local governments.

(Securing Stable Food Supply)

Article 2

In consideration of the fact that food is indispensable in maintaining human life and important as a basis for healthy and fulfilled living, a stable supply of good-quality food at reasonable prices shall be secured for the future.

1. In consideration of the fact that there are certain unstable factors in the world food trade and supply/demand, this stable food supply to the people shall be secured with domestic agricultural production as a basis, together with an appropriate combination with imports and stockpiles.
2. Food supply shall be managed in such a way as to improve agricultural productivity and to comprehensively promote the sound development of agriculture and food industries, in response to the more sophisticated and diversified public demand.
3. Even in the case that domestic supply is insufficient to meet demand or is likely to be for a certain period, due to unexpected situations such as a bad harvest or interrupted imports, the minimum food supply required for the people shall be secured in order not to be a hindrance to the stability of peoples' lives and smooth operation of the national economy.

(Fulfillment of Multifunctional Roles)

Article 3

In consideration of the importance of maintaining the stability of the people's lives and the national economy, the multiple roles that agriculture plays through stable production in rural areas, from the conservation of national land, water resources, and the natural environment to the formation of a good landscape and maintenance of cultural traditions, in addition to its conventional role as a primary food supplier (hereinafter referred to as 'multifunctional roles'), shall be fulfilled sufficiently for the future.

(Sustainable Agricultural Development)

Article 4

In consideration of the importance of its conventional role as a primary food supplier and its multifunctional roles, the sustainable development of agriculture shall be promoted by securing agricultural facilities including the necessary farmlands and irrigation/drainage, and a workforce, establishing a desirable agricultural structure with an effective combination of the above elements, based on regional characteristics, maintaining and improving the natural cyclical function of agriculture. (The latter term means the function of agriculture in stimulating the biological and physical cycle in nature while being influenced strongly by the cycle. This is the meaning referred to hereinafter.)

(Development of Rural Areas)
Article 5

In consideration of the fact that rural areas play important roles as the bases for sustainable agricultural development, where farming is operated in the place of living for local residents including farmers, rural areas shall be developed through improvements in agricultural production conditions and rural welfare including living infrastructure so that the conventional role as primary food supplier and the multifunctional roles can be fulfilled sufficiently.

(Proper Consideration to Fisheries and Forestry Industries)
Article 6

In taking measures on food, agriculture and rural areas, adequate consideration shall be given to the development of the fisheries and forestry industries in view of their close relationship with agriculture.

(Responsibility of the State)
Article 7

1. The State is responsible for formulating and implementing comprehensive policies with regard to food, agriculture and rural areas, pursuant to the basic principles on policies for food, agriculture and rural areas prescribed in articles 2-5 (hereinafter referred to as the "basic principles").
2. The State shall make efforts to obtain a better understanding of the basic principles among the people by providing relevant information on food, agriculture and rural areas.

(Responsibility of Local Governments)
Article 8

The local governments are responsible, in pursuant with the basic principles, and based on an appropriate sharing of roles with the State, for formulating and implementing policies that suit their natural and socioeconomic characteristics with regard to food, agriculture and rural areas.

(Efforts of Farmers, etc.)
Article 9

Farmers and farmers' organizations shall make voluntary efforts to realize the basic principles in operating farming and other relevant activities.

(Efforts of the Food Industry)
Article 10

Operators in the food industry shall make efforts in operating their business, pursuant to the basic principles, in order to secure a stable food supply to the people.

(Support Provided to the Efforts of Farmers, etc.)
Article 11

In taking measures on food, agriculture and rural areas, the state and local governments shall aim to provide support to the voluntary efforts of farmers, farmers' organizations and food industry operators.

(Consumers' Role)
Article 12

Consumers shall be encouraged to have a better understanding of food, agriculture and rural areas and be more positive in improving their dietary patterns.

(Legislative Measures, etc.)
Article 13

The Government shall take legislative, fiscal and financial measures required to implement policies with regard to food, agriculture and rural areas.

(Annual Report)
Article 14

1. The Government shall annually submit to the Diet a report on the state of food, agriculture and rural areas and on the policies implemented with regard to food, agriculture and rural areas.
2. The Government shall annually prepare and submit to the Diet a document explaining policies the Government is going to implement in consideration of the state of food, agriculture and rural areas described in the report in the preceding paragraph.
3. The Government shall seek opinions from the Council of Food, Agriculture and Rural Area Policies in preparing a document explaining policies the Government is going to implement as referred to in the preceding paragraph.

Chapter II Basic Policies

Section 1 Basic Plan for Food, Agriculture and Rural Areas

Article 15

1. The Government shall establish a basic plan for food, agriculture and rural areas (hereinafter referred to as the 'basic plan') for the promotion of the comprehensive and systematic implementation of policies on food, agriculture and rural areas.
2. The basic plan shall stipulate the following matters:
    - Basic direction in formulating policies on food, agriculture and rural areas
    - Target for food self-sufficiency ratio
    - Policies implemented comprehensively and systematically by the Government with regard to food, agriculture and rural areas
    - Besides the preceding matters, matters required to comprehensively and systematically promote policies on food, agriculture and rural areas.
3. A target for the food self-sufficiency ratio as referred to in the second item of the preceding paragraph above shall be established as a guideline for domestic agricultural production and food consumption, while identifying issues which farmers and other relevant parties should address.

4. Policies in the basic plan related to rural areas shall be developed in harmony with the national plan of comprehensive use, development and conservation of national land.
5. The Government shall seek opinions from the Council of Food, Agriculture and Rural Area Policies in establishing the basic plan, under the provision of paragraph 1.
6. The Government shall, without delay, promulgate the basic plan when established under the provision of paragraph 1.
7. The Government shall revise the basic plan approximately every 5 years, in consideration of changes in circumstances surrounding food, agriculture and rural areas and also the result of policy evaluation on food, agriculture and rural areas.
8. Provisions of paragraphs 5 and 6 above shall apply mutatis mutandis to changes of the basic plan.

Section 2 Policies for Securing a Stable Food Supply
(Improvement of Food Consumption Policies)
Article 16

The State shall take necessary measures such as improving the management of food hygiene and quality as well as proper food labeling, in order to secure food safety, improve food quality, and help consumers make proper selections.

The State shall take necessary measures such as developing guidelines for a healthy dietary pattern, broadening the people's knowledge of food consumption, and providing relevant information, in order to promote better dietary patterns and the effective use of agricultural resources.

(Sound Development of the Food Industry)
Article 17

The State shall take necessary measures such as reinforcing the management base, encouraging closer cooperation with agriculture, and streamlining its distribution system, in order to promote sound development of the food industry in view of the importance of its role as a stable food supply and with proper consideration given to reducing the adverse effects of its business operations on the environment and ensuring effective use of resources.

(Policies on Imports/Exports of Farm Products)
Article 18

The State shall take necessary measures such as tariff rate adjustments and import restrictions, where urgently required when certain imports have or are likely to have a significant adverse effect on the production of domestic farm products competing against such imports, in order to secure stable imports of farm products for which domestic production cannot meet demand.

The State shall take necessary measures such as enhancing the competitiveness of domestic farm products, promoting market research, providing relevant information, and encouraging dissemination activities, in order to increase exports.

(Food Security for Emergencies)
Article 19

The State shall take necessary measures such as production increases and distribution restrictions, should these be deemed necessary in order to secure the minimum food required by the people in the events prescribed in paragraph 3 of Article 2.

(Promotion of International Cooperation)
Article 20

The State shall endeavor to promote international cooperation including technical and financial cooperation for the development of agriculture and rural areas as well as food aid to developing regions, in order to help the long-term stability of the world's food supply/demand.

Section 3 Policies for Sustainable Agricultural Development
(Establishment of Desired Agricultural Structure)
Article 21

The State shall promote a better agricultural production infrastructure, expand the scale of farm management, and take other necessary measures for improving farmers' management structure, according to the type of management and the regional characteristics, in order to encourage efficient and stable farm management and to construct an agricultural structure in which such management can play a major part.

(Farming Operations by Full-time Farmers etc.)
Article 22

In consideration of the fact that it is important to enable full-time farmers and other motivated farmers to use their originality and creativity in their farm management, the State shall take necessary measures for revitalizing family farming by means of bringing about conditions for better farmers' management such as more rationalized business administration and smooth business succession, and to promote the incorporation of farm management.

(Securing and Effectively Utilizing Farmland)
Article 23

The State shall take necessary measures such as securing the agricultural use of land suitable for farming, promoting the intensive use of farmland by those farmers whose management structure is efficient and stable, and promoting effective use of farmland in order to secure and efficiently utilize the farmland for domestic agricultural production.

(Improvement of Agricultural Production Infrastructure)
Article 24

The State shall take necessary measures for improving the agricultural production infrastructure including field division enlargement, the creation of multipurpose paddy fields, maintenance of better functions of irrigation and drainage facilities, according to regional characteristics, in consideration of harmony with the environment and with the view of efficient operation, in order to encourage the improvement of agricultural productivity by maintaining farmland with good conditions and agricultural water facilities and promoting their effective use.

(Securing and Fostering the Workforce)
Article 25

The State shall take necessary measures such as improving the technical and management skill of farmers, and encouraging recruitment of new farmers to acquire knowledge of agricultural technologies and management styles, in order to secure and foster a workforce to play a major role in effective and stable farm management.

The State shall take necessary measures such as the promotion of agricultural education so as to obtain a better understanding and interest of agriculture among the people.

(Promotion of Women's Involvement in Agriculture)
Article 26

In consideration of the importance of securing opportunities for both men and women to participate in all kinds of social activities as equal members of society, the State shall promote the creation of an environment in which women's roles in farming operations are fairly assessed and women can be provided with opportunities to become involved in farm management and other relevant activities on a voluntary basis.

(Promotion of Activities by Elderly Farmers)
Article 27

The State shall create an environment in which elderly farmers can be satisfied with their activities relevant to farming in accordance with their role in local farming and their skills and improve their welfare.

(Promotion of Activities of Agricultural Production Organizations)
Article 28

The State shall take necessary measures for promoting activities by cooperative organizations including those based on rural communities and organizations which operate commission farming, in order to contribute to secure effective agricultural production in local agriculture.

(Development and Promotion of Agricultural Technology)
Article 29

The State shall take necessary measures such as setting specific goals for the research and development of technology, encouraging closer cooperation among national and local research institutes, universities and private bodies, and promoting the dissemination of agricultural technologies that suit regional characteristics, in order to effectively promote research and development and dissemination activities of such technology in the fields of agriculture, food processing and distribution.

(Price Formation of Farm Products and Stabilization of Farm Management)
Article 30

The State shall take necessary measures for allowing the prices of farm products to form appropriately reflecting the real supply/demand situation and quality evaluation, in order to promote agricultural production responsive to consumer demands.

The State shall take necessary measures for mitigating the adverse effects of significant price changes of farm products on farm management.

(Compensation for Disaster Losses)
Article 31

The State shall take necessary measures such as reasonable compensation for disaster losses, in order to prevent any possible hindrance to agricultural production caused by disasters and to help the stabilization of farm management.

(Maintenance and Promotion of the Natural Cyclical Function of Agriculture)
Article 32

The State shall take necessary measures such as securing the proper use of agricultural chemicals and fertilizers and improving soil fertility through effective use of livestock manure, in order to maintain and promote the natural cyclical function of agriculture.

(Rationalization of Production and Distribution of Agricultural Materials)
Article 33

The State shall take necessary measures such as encouraging rationalized production and distribution systems of agricultural materials, in order to help with cost reduction of agricultural materials in farm management.

Section 4 Policies for Development of Rural Areas
(Comprehensive Development of Rural Areas)
Article 34

The State shall systematically promote measures on the comprehensive development of rural areas including agricultural development, giving proper consideration to the coordination of land use for agricultural and other purposes.

The State shall take necessary measures for comprehensively promoting improvements in agricultural production bases and rural welfare including living infrastructure such as transportation, telecommunications, public health, education and culture fitting in with regional characteristics, in order to promote the sound development of regional agriculture and create pleasant and resident-friendly rural areas surrounded with beautiful landscape.

(Development of Hilly and Mountainous Areas)
Article 35

The State shall take necessary measures in areas with poor geographical conditions and disadvantages in agricultural production including mountainous areas (hereinafter referred to as "hilly and mountainous areas"), such as increasing job opportunities by promoting agricultural and other businesses through the introduction of new types of crops and the production/distribution of regional specialties, taking such regional characteristics into consideration and promoting the settlement of people through improved living conditions.

The State shall take specific measures for the fulfillment of the multifunctional roles of agriculture in hilly and mountainous areas, by providing support to compensate for disadvantages in agricultural production conditions so that such areas can maintain adequate production activities.

(Exchanges Between Urban Areas and Rural Areas)
Article 36

The State shall take necessary measures such as encouraging exchanges between urban areas and rural areas, and promoting the improvement of kitchen gardens, in order to obtain a better public understanding and awareness for agriculture and rural areas and to contribute to a healthy and comfortable life.

The State shall take necessary measures so that agriculture in and around urban areas can operate production activities responsive to the needs of urban residents, making use of the advantage of proximity to consumers.

Chapter III Administrative Bodies and Relevant Organizations

(Restructuring of Administrative Bodies)
Article 37

In taking measures on food, agriculture and rural areas, the State and local government shall endeavor to cooperate closely in their work to restructure administrative bodies and to improve their efficiency and transparency in administrative management.

(Reorganization/Restructuring of Relevant Bodies)
Article 38

The State shall take necessary measures for the effective restructuring of the relevant bodies for food, agriculture and rural areas, which contribute to the realization of the basic principles.

Chapter IV The Council of Food, Agriculture and Rural Area Policies

(Establishment)
Article 39

There is hereby established the Council of Food, Agriculture and Rural Area Policies (hereinafter referred to as the "Council") in the Ministry of Agriculture, Forestry and Fisheries.

(Authorization)
Article 40

The Council shall study and discuss the factors vital for implementing this Law, in response to consultations by the Prime Minister, the Minister of Agriculture, Forestry and Fisheries or other ministers concerned, in addition to dealing with the tasks authorized under this Law and other ordinances.

The Council may submit its opinions to the Prime Minister, the Minister of Agriculture, Forestry and Fisheries or other ministers concerned, with regard to the matters provided for in the preceding paragraph.

(Organization)
Article 41

The Council shall be comprised of no more than 15 members.

The Council members shall be appointed by the Prime Minister based on the proposals of the Ministry of Agriculture, Forestry and Fisheries from among academics or those having expertise or experience with regard to the matters provided for in the first paragraph of the preceding article.

The Council members shall serve on a part-time basis.

Besides those provided for in paragraph 2, the Council staff, as stipulated by Cabinet Order, shall be appointed by the Prime Minister based on the proposals of the Minister of Agriculture, Forestry and Fisheries.

(Request of Document Submission and others)
Article 42

The Council may request that the heads of relevant administrative bodies submit the appropriate documentation, and offer their opinions, explanations and other kinds of cooperation as deemed necessary for the execution of their designated tasks.

(Authorization Provision)
Article 43

Besides those provided for in this Law, the matters necessary for the organization and administration of the Council shall be stipulated by Cabinet Order.

Supplementary Provisions

(Effective Date)
Article 1

The Law shall enter into force on the day of its promulgation.

(Abrogation of the Agricultural Basic Law)
Article 2

The Agricultural Basic Law (Law No. 127, established in 1961) shall be abrogated.

(Transitional Application)
Article 3

If such a report as referred to under Paragraph 1 of Article 6 of the Agricultural Basic Law before abrogation, as stipulated in the preceding article (hereinafter referred to as the "old Agricultural Basic Law"), has not been submitted to the Diet for 1999 before the effective date of this Law, this report shall be submitted to the Diet as referred to in the former provisions.

If such a report as referred to in the first paragraph of Article 6 of the old Agricultural Basic Law was submitted before the effective date of this Law, or if such a report as referred to in the first paragraph of Article 6 of the old Agricultural Basic Law as stipulated in the preceding paragraph was submitted to the Diet, such reports shall be deemed to have been submitted as reports as referred to in the first paragraph of Article 14 under that paragraph.

If such a document as referred to in Article 7 of the old Agricultural Basic Law has not been submitted to the Diet for 1999 on the effective date of this Law, such a document shall be submitted to the Diet as referred to in that article.

If such a document as referred to in Article 7 of the old Agricultural Basic Law was submitted before the effective date of this Law, or if such a document as referred to in the first paragraph of Article 7 of the old Agricultural Basic Law which is prescribed to be submitted as stipulated in the preceding paragraph was submitted to the Diet, such documents shall be deemed to have been submitted as documents as referred to in the second paragraph of Article 14 under that paragraph.

(Partial Amendment of the Land Improvement Law)

Article 4

Parts of the Land Improvement Law (Law No. 195, established in 1949) are amended as follows:

The phrase "The Council of Food, Agriculture and Rural Area Policies" shall be inserted instead of the phrase "The Council of Agricultural Policies" in Article 4(2)1, and the word "kiite" in hiragana shall be amended to "kiite" in kanji characters.

(Partial Amendment of the Sweetening Resources Special Measure Law)

Article 5

Parts of the Sweetening Resources Special Measure Law (Law No. 41, established in 1964) are amended as follows:

Article 3 is amended as follows:

Article 3 Elimination

The phrase "Estimated by the long-term prospects and other relevant data on crops for sweeteningr esources published under Article 3 of this Law and paragraph 1 of Article 8 of the Agricultural Basic Law" in Article 13(2)1 shall be eliminated.

(Partial Amendment of the Law concerning the Active Use of National Forests)

Article 6

Parts of the Law concerning the Active Use of National Forests (Law No. 108, established in 1971) are amended as follows:

The phrase "Improvement of the agricultural structure means scale expansion of farming operations, transition into collective farming operations, introduction of livestock, mechanization, farmland holding rationalization, and farming modernization" shall be inserted instead of the phrase "'Improvement of the agricultural structure' and" in the second paragraph of Article 2, and the phrase "'Improvement of the agricultural structure' and ..... as provided for in Article 2 (1) 3 of the Agricultural Basic Law (Law No. 127, established in 1961) respectively" shall be eliminated.

(end)

Appendix 2 Programme

Regional Workshop
Effects of Trade Liberalization on Agriculture in Asia
5-8 October 1999
Hotel Salak
Bogor, Indonesia

Tuesday, 5 October 1999

		Moderator
08:30 -	Registration	
09:30 -	Opening messages by: - Dr. Haruo Inagaki, Director CGPRT - Mr. Yukio Kawauchi, First Secretary Embassy of Japan, Jakarta - Mr. Nibhon Debavalya, Chief Population and Rural and Urban Development Division UN ESCAP secretariat - Dr. Joko Budianto, Director General Agency for Agricultural Research and Development Ministry of Agriculture, Republic of Indonesia	Ms. Fetty Prihastini (CGPRT Centre)
10:00 -	*Break*	
10:30 -	Keynote paper by: - Dr. Keiji Ohga, Professor University of Tokyo, Japan	Dr. Haruo Inagaki (CGPRT Centre)
11:30 -	Project report by: - Dr. Michio Kanai (Project Leader) CGPRT Centre	
11:45 -	*Photo session*	
12:00 -	*Lunch*	
13:00 -	Country report	Dr. Muhammad Ramzan Akhtar

	of: - China by Dr. Jikun Huang (National Expert) Mr. Chen Dongsheng (Commentator)	(Pakistan)
14:00 -	- India by Dr. Ramesh Chand (National Expert)	
15:00 -	*Break*	
15:30 - -16:30	- Indonesia by Dr. Erwidodo (National Expert) Dr. Kaman Nainggolan (Commentator)	
18:30 -	Dinner hosted by the CGPRT Centre at Novotel Bogor	

Wednesday, 6 October 1999

		Moderator
08:30 -	Country report of: - Japan by Dr. Hiroaki Kobayashi (National Expert) Mr. Akira Oikawa (Commentator)	Dr. Jikun Huang (China)
09:30 -	*Break*	
10:00 -	- Malaysia by Dr. Ariffin Tawang (National Expert, Proxy) Prof. Dr. Abdul Azis Rahman (Commentator)	
11:00 -	- Pakistan by Dr. Muhammad Ramzan Akhtar (National Expert) Dr. Ikram Saeed (Commentator)	
12:00 -	*Lunch*	
13.00 -	- Philippines by Dr. Minda Mangabat (National Expert) Dr. Archilles C. Costales (Commentator)	Dr. Ramesh Chand (India)
	- Republic of Korea Dr. Myung-Hwan Sung (National Expert) Dr. Ho-Seop Yoon (Commentator)	
12:00 -	*Break*	
15:30 -	- Thailand by Dr. Kajonwan Itharattana (National Expert) Dr. Yodying Kongtong (Commentator)	Dr. Myung-Hwan Sung (Rep. of Korea)

16:30 -	- Viet Nam by Mr. Nguyen Ngoc Que (National Expert, Proxy) Dr. Chu Chi Loi (Commentator)	
- 17:30		

Thursday, 7 October 1999

		Moderator
08:00	Field tour to: - Tea Plantation and Factory - Research Institute for Ornamental Plants - Flower Company	Dr. Pantjar Simatupang (CGPRT Centre)
- 17:30		

Friday, 8 October 1999

		Moderator
08:30	Additional country reports of: - Bangladesh by Dr. Mostafa Abid Khan - Cambodia by Mr. Srey Vuthy - Lao PDR by Mr. Khamxay Sipaseuth	Dr. Erwidodo (Indonesia)
10:00 -	*Break*	
	- Myanmar by U. Aung Hlaing - Nepal by Mr. Shambu Bahadur Pandey - Sri Lanka by Dr. H. Somapala	Dr. Hiroaki Kobayashi (Japan)
12:00 -	*Lunch*	
13:00 -	Consolidated report by: - Dr. Boonjit Titapiwatanakun (Regional Advisor) Kasetsart University, Thailand	Dr. Pantjar Simatupang (CGPRT Centre)
14:00 -	*Break*	
14:30 -	Plenary discussion	Dr. Boonjit Titapiwatanakun (Kasetsart University, Thailand)

16:00 - Closing address by Dr. Haruo Inagaki
(CGPRT Centre)

Appendix 3 List of Participants

Regional Workshop
Effects of Trade Liberalization on Agriculture in Asia
Bogor, 5-8 October 1999

No.		Name/title/address
A.	**PRINCIPAL GUESTS**	
1.	**JAPAN**	**Mr. Yukio Kawauchi** First Secretary (Agriculture) Embassy of Japan Menara Thamrin Level 7 to 10 Jl. M.H. Thamrin Kav. 3 Jakarta Pusat
2.	**UN ESCAP**	**Dr. Nibhon Debavalya** Director Population and Rural & Urban Development Division UN ESCAP UN Building, Rajdamnern Nok Avenue Bangkok 10200, Thailand
3.	**INDONESIA**	**Dr. Joko Budianto** Director General Agency for Agricultural Research and Development Ministry of Agriculture Jl. Ragunan No. 29, Pasar Minggu Jakarta Selatan 12540
B.	**KEYNOTE SPEAKER**	
4.		**Dr. Keiji Ohga** Professor Graduate School of Agricultural and Life Sciences The University of Tokyo Yayoi 1-1, Bunkyo-Ku, Tokyo, Japan

No.		Name/title/address
C.	**REGIONAL ADVISOR**	
5.		**Dr. Boonjit Titapiwatanakun** Dept. of Agricultural and Resource Economics Fac. of Economics, Kasetsart University Bangkok 10903, Thailand
	PARTICIPATING COUNTRIES	
D.	**NATIONAL EXPERTS**	
6.	**CHINA**	**Dr. Jikun Huang** Director Center for Chinese Agricultural Policy Chinese Academy of Agricultural Sciences 30 Baishiqiao Road, Beijing 100081, People's Republic of China
7.	**INDIA**	**Dr. Ramesh Chand** Principal Scientist National Centre for Agricultural Economics and Policy Research Library Avenue, IASRI Campus New Delhi, India
8.	**INDONESIA**	**Dr. Erwidodo** Director/Agricultural & Resource Economist Center for Social Economic Research on Forestry and Estate Crops Gunung Batu no. 5, Bogor, Indonesia
9.	**JAPAN**	**Dr. Hiroaki Kobayashi** Senior Researcher Japan International Research Center for Agricultural Sciences Ohwashi 1-2 , Tsukuba, Ibaraki 305-8686, Japan
10.	**MALAYSIA (proxy)**	**Mr. Ariffin bin Tawang** Assistant Director/Programme Leader Economic and Technology Management Research Centre Malaysian Agricultural Research and Development Institute MARDI Headquarters PO. Box 12301, 50774 Kuala Lumpur, Malaysia
	PARTICIPATING COUNTRIES	
D.	**NATIONAL EXPERTS**	
11.	**PAKISTAN**	**Dr. Muhammad Ramzan Akhtar**

No.		Name/title/address
		Senior Agricultural Economist Pakistan Agricultural Research Council Islamabad, Pakistan Present address: 64-Carolbreen SO Scarborough Ontario M1VIHS, Canada
12.	**PHILIPPINES**	**Dr. Minda C. Mangabat** Chief, Data Processing & Information Division Bureau of Agricultural Statistics Department of Agriculture Ben-Lor Building, 1184 Quezon Avenue Quezon City, the Philippines
13.	**KOREA, Rep. of**	**Dr. Myung-Hwan Sung** Korea Rural Economic Institute 4-102 Hoigi-Dong, Dongdaemoon-Gu, Seoul 130-050 Republic of Korea
14.	**THAILAND**	**Dr. Kajonwan Itharattana** Senior Policy and Plan Analyst Office of Agricultural Economics Ministry of Agriculture and Cooperatives Kasetsart University Campus, Bangkhen Bangkok 10900, Thailand
15.	**VIET NAM (proxy)**	**Mr. Nguyen Ngoc Que** Director Centre for Research Information and Data Analysis The Institute of Agricultural Economics 6 Nguyen Cong Tru Street, Hanoi, Viet Nam
E.	**COMMENTATORS**	
16.	**CHINA**	**Mr. Chen Dongsheng** Director, Associate Professor Township Enterprises Management College Ministry of Agriculture Langfang City, Hebei Province, People's Republic of China
E.	**COMMENTATORS**	
17.	**INDONESIA**	**Dr. Kaman Nainggolan** Director Center for Market & Information Development

No.		Name/title/address
		Agribusiness Agency, Ministry of Agriculture Jl. Harsono RM No. 3, Building D Ministry of Agriculture Ragunan, Jakarta, Indonesia
18.	**JAPAN**	**Mr. Akira Oikawa** JICA Expert Chief Advisor to the Ministry of Agriculture, Republic of Indonesia
19.	**MALAYSIA**	**Dr. Abdul Azis Abdul Rahman** Professor & Director Centre for Policy Studies University Putra Malaysia 43400 UPM, Serdang, Selangor, Malaysia
20.	**PAKISTAN**	**Dr. Ikram Saeed** Director, Agribusiness Social Sciences Division Pakistan Agricultural Research Council Plot No. 20 G-5/1, PO Box 1031 Islamabad, Pakistan
21.	**PHILIPPINES**	**Dr. Achilles C. Costales** Associate Professor, Chair Department of Economics University of the Philippines Los Baños 4031 College, Laguna, the Philippines
22.	**KOREA, Rep. of**	**Dr. Ho-Seop Yoon** Research Director Korea Rural Economic Institute 4-102 Hoegi-Dong, Dongdaemun-ku Seoul 130-050, Republic of Korea
23.	**THAILAND**	**Dr. Yodying Kongtong** Lecturer Department of Economics Faculty of Economics, Kasetsart University Bangkok 10900, Thailand
E.	**COMMENTATORS**	
24.	**VIET NAM**	**Dr. Cu Chi Loi** Researcher Institute of Economics 27 Tran Xuan Soan, Str., Hanoi, Viet Nam

No.		Name/title/address
F.	**ADDITIONAL SPEAKERS NON-PARTICIPATING COUNTRIES**	
25.	**BANGLADESH**	**Dr. Mostafa Abid Khan** Assistant Chief Bangladesh Tariff Commission 1st 12 Storied Government Building 9th Floor, Segun Bagicha, Dhaka – 1000, Bangladesh
26.	**CAMBODIA**	**Mr. Srey Vuthy** Chief, Agricultural Marketing Office Department of Planning, Statistics and International Co-operation Ministry of Agriculture, Forestry and Fisheries #200, Preah Norodum Bld. Phnom Penh Cambodia
27.	**LAO PDR**	**Mr. Khamxay Sipaseuth** Senior Staff, Cooperation and Investment Unit Department of Agriculture P.O. Box 811 Vientiane, Lao PDR
28.	**MYANMAR**	**U Aung Hlaing** Assistant Director Department of Agriculture Ministry of Agriculture and Irrigation Thirimingalar Lane, Kabar aye Pagoda Road Yankin P.O., Yangon, Myanmar
29.	**NEPAL**	**Mr. Shambhu Bahadur Pandey** Director Planning and Coordination Nepal Agricultural Research Council P.O. Box 5459, Kathmandu, Nepal
30.	**SRI LANKA**	**Dr. H. Somapala** Director Field Crops Research & Development Institute Department of Agriculture Maha Illuppallama Sri Lanka
G.	**GUESTS**	
31.	**INDONESIA**	**Mr. Asep Saiful Bachri** Coordinator, Research Center for Agro-Socio Economic Research Jl. Achmad Yani 70, Bogor 16144, Indonesia

No.		Name/title/address
32.		**Dr. Bungaran Saragih** Director Center for Development Studies Bogor Agricultural University Jl. Raya Pajajaran, Bogor, Indonesia
33.		**Mr. H. Suharyo Husen** Director International Cooperation Bureau Ministry of Agriculture Jl. Harsono R.M. No. 3, Pasar Minggu Jakarta Selatan 12550, Indonesia
34.		**Mr. Ishaka H. Mustamin** Head of Regional Division International Cooperation Bureau Ministry of Agriculture Jl. Harsono RM No. 3 Ragunan, Jakarta Selatan , Indonesia
35.		**Mr. Gardjita Budi** Head, Section of International Trade Institution Bureau of International Coopeartion Ministry of Agriculture Jl. Harsono no. 3, Pasar Minggu Jakarta, Indonesia
36.		**Mr. Toferry** Head, Section for Trade & Development Department of Foreign Affairs Jl. Pejambon no. 6, Jakarta 10110, Indonesia
37.		**Ir. Zulkifli Ali, M.Si** Assistant Deputy Director International Coopeartion Bureau Ministry of Agriculture Jl. Harsono R.M. No. 3, Pasar Minggu Jakarta Selatan 12550, Indonesia
38.	**EMBASSIES**	**Mr. Pisan Luetongcharg** Minister Counsellor (Agriculture) Office of Agricultural Affairs Royal Thai Embassy Jl. Imam Bonjol No. 74 Jakarta Pusat 10310, Indonesia

No.		Name/title/address
39.		**Mr. C.A.H.M. Wijeratne** First Secretary Embassy of the Democratic Socialist Republic of Sri Lanka Jl. Diponegoro No. 70, Jakarta Pusat, Indonesia
40.		**Mr. Sheikh Azmi Shamsudin** Counsellor (Economic) Embassy of Malaysia Jl. H.R Rasuna Said Kav. X/6 Jakarta 12950, Indonesia
41.		**Mr. Saurabh Kumar** First Secretary Embassy of India Jl. H.R Rasuna Said Kav. S-1, Kuningan Jakarta 12950, Indonesia
42.	**INTERNATIONAL ORGANIZATIONS**	**Dr. Keith Fuglie** Agricultural Economist International Potato Center Kebun Percobaan Muara Jl. Raya Ciapus, Bogor 16610, Indonesia
43.		**Dr. Junko Goto** Senior Researcher Japan International Institute for Agricultural Sciences c/o Center for Agro-Socio Economic Research Jl. Achmad Yani 70, Bogor 16161, Indonesia

H. CGPRT Centre

Jl. Merdeka 145, Bogor 16111, Indonesia
Phone: 62-251-356813, 343277 and Fax.: 62-251-336290
E-mail address: cgprt@server.indo.net.id

1.	**Dr. Haruo Inagaki**	Director
2.	**Dr. Pantjar Simatupang**	Programme Leader of R&D

No.	Name/title/address	
3.	**Dr. Michio Kanai**	Project Leader
4.	**Dr. Robin Bourgeois**	Agro-economist
5.	**Mr. Franck Jesus**	Agro-economist
6.	**Dr. M.A.T Chowdhurry**	Training Assistant
7.	**Mr. Garry Timoshenko**	Database Manager
8.	**Mr. Bart van Assen**	NRL Expert