The World's Largest Open Access Agricultural & Applied Economics Digital Library

This document is discoverable and free to researchers across the globe due to the work of AgEcon Search.

Help ensure our sustainability.

Give to AgEcon Search

AgEcon Search
http://ageconsearch.umn.edu
aesearch@umn.edu

*Papers downloaded from **AgEcon Search** may be used for non-commercial purposes and personal study only. No other use, including posting to another Internet site, is permitted without permission from the copyright owner (not AgEcon Search), or as allowed under the provisions of Fair Use, U.S. Copyright Act, Title 17 U.S.C.*

No endorsement of AgEcon Search or its fundraising activities by the author(s) of the following work or their employer(s) is intended or implied.

Historic, archived document

Do not assume content reflects current scientific knowledge, policies, or practices.

7g84Mr
op. 2

Marketing Research Report No. 717

Gamma Radiation of FRUITS

To Extend Market Life

U. S. DEPT. OF AGRICULTURE
NATIONAL AGRICULTURAL LIBRARY
JAN 12, 1966
CURRENT SERIAL RECORDS

Agricultural Research Service
UNITED STATES DEPARTMENT OF AGRICULTURE

PREFACE

The research reported here was conducted in cooperation with the U.S. Atomic Energy Commission under contract number AT(49–11)–2342. The mobile cobalt 60 irradiation unit was leased from Atomic Energy of Canada, Limited, and was located in Fresno, Calif., from June 17, 1963, to April 1, 1964.

The assistance of Dr. M. A. Smith and Dr. Louis Beraha, of the U.S. Department of Agriculture Market Pathology Laboratory, Chicago, and Dr. Frank M. Porter, Market Pathology Laboratory, Belle Mead, N.J., in evaluating the fruit in the shipping tests is gratefully acknowledged. We also appreciate the help of Allan E. Smith, of the Southwestern Radiological Health Laboratory, Las Vegas, Nev., who determined the radioactivity of samples of irradiated fruits, and the many other organizations and individuals that cooperated in these tests.

Radiation and radiation sources intended for use in the production, processing, and handling of food are defined as food additives by the Federal Food, Drug, and Cosmetics Act, and food so treated is subject to its provisions. The Food and Drug Administration must promulgate regulations establishing the conditions under which such radiations may be safely used on specific foods before such products may be legally shipped for marketing. Thus far (May 17, 1965), regulations have been issued clearing radiation processing of bacon, wheat and wheat products, and white potatoes. FDA is considering a petition requesting a regulation for the irradiation of oranges. No petitions for irradiation of other fruits or vegetables have been submitted.

CONTENTS

	Page
Summary	IV
Background	1
General procedures	1
Experimental procedures and results	2
Peaches	2
Nectarines	5
Plums	6
Pears	9
Strawberries	11
Figs	14
Grapes	15
Oranges	16
Apples	19
Avocados	20
Olives	21
Discussion	21
Literature cited	23
Appendix	24

Trade names are used in this publication solely to provide specific information. Mention of a trade name does not constitute a guarantee or warranty and does not signify that the product is approved to the exclusion of other comparable products.

Washington, D.C. Issued November 1965

SUMMARY

Eleven kinds of fresh fruits were irradiated to determine possible extension of the market life. Irradiation of strawberries and two varieties of fig extended the market life by several days through reduction of decay, without apparent impairment of fruit quality. Brown rot, but not Rhizopus rot, of peaches and nectarines was controlled; the peaches softened during irradiation and subsequently developed more red color but less flavor than the controls. Radiation inhibited blue coloring of plums and increased softening of the fruits. Low doses inhibited ripening of pears by several days, but the resultant ripening was abnormal. Decay of grapes was controlled less effectively by radiation than by the customary sulfur dioxide fumigation. Radiation increased rind pitting of oranges without reducing decay during semicommercial tests. Irradiated apples were softer, more shriveled, and had less flavor than the controls following storage for 3 to 6 months. Avocados and olives were severely discolored both internally and externally by radiation.

Individual varieties of peaches and figs responded quite differently to radiation. Water on the surface of peaches during irradiation caused spotting of the skin. The stage of development of fungal infections determined the effectiveness of radiation as a decay-control agent for oranges. Fruit maturity within the limits of these experiments did not affect the responses to radiation.

GAMMA RADIATION OF FRUITS TO EXTEND MARKET LIFE

By WILLIAM J. BRAMLAGE [1] and H. MELVIN COUEY,[2] *Market Quality Research Division, Agricultural Research Service*

BACKGROUND

Radiation pasteurization, the use of low doses of ionizing radiation to inhibit microbial spoilage of foodstuffs, has received much attention in recent years. Although micro-organisms vary in susceptibility to radiation, complete sterilization of certain processed foods has been achieved through high-dose irradiation. Fresh fruits and vegetables cannot be treated with sterilizing doses, for, being living matter, they, as well as the micro-organisms, are susceptible to radiation injury. Consequently, the feasibility of irradiation of these living materials for decay control is dependent upon resistance by the host to radiation doses that are inhibitory to the decay-causing organisms.

Growth of some of the most serious fruit pathogens, including *Botrytis cinerea* Fr., *Monilinia fructicola* (Wint.) Honey, and *Penicillium* species, is retarded by relatively low doses of gamma radiation (*1, 12, 13*).[3] However, fruits vary greatly in their susceptibility to radiation injury—the literature is replete with conflicting results of radiation tests. Hannan (*4*) reviewed the early work on food irradiation, and more recent reviews have been published by the U.S. Army Quartermaster Corps (*15*) and the U.S. Atomic Energy Commission (*17*).

The study reported here was undertaken in cooperation with the U.S. Atomic Energy Commission as a part of a broad study of radiation pasteurization of foods, recently described by Shea (*9*). Location of the gamma radiation unit in Fresno, Calif., permitted an evaluation of the role of such a facility in an area where a large variety of fresh fruit is available over a large part of the year. The objectives of the study were (1) to evaluate, in fairly large-scale tests, the extension of market life of different crops by irradiation, and (2) to relate factors such as varietal differences, maturity, and types of packaging to radiation responses. This report includes only the results of irradiation of fruit crops; results for vegetable crops are presented in a separate report (*3*).

GENERAL PROCEDURES

Eleven kinds of fruit available in large quantities during the testing period were evaluated for factors that might affect responses to radiation. Greatest attention was given to fruits that were grown locally, such as peaches, plums, and nectarines.

Fruits were treated in a trailer-mounted irradiator containing a 40,000-curie source of cobalt 60. Produce to be irradiated was placed in aluminum buckets having internal dimensions of 15 by 7½ by 7½ inches. These buckets were moved by conveyors into the irradiation chamber, where they revolved around a rod-type cobalt 60 source on a "ferris wheel" mechanism. (See illustration, fig. 1.) The chamber held eight buckets at one time, and the length of time a bucket remained in the chamber determined the total dose the produce received. Because the buckets entered and left the radiation positions one at a time, the radiation dose given to any one bucket was independent of the dose given to any other bucket. The dose rate of about 5 kilorad (krad) per minute was constant, and the design of this irradiator provided a maximum dose variation of ±13 percent within each bucket. Although the irradiation chamber was equipped with a refrigerated air ventilation system, the air temperature in the irradiation chamber remained higher than the temperature of the fruit, and the maximum rise in the surface temperature of produce during irradiation was about 5° F.

Control fruits (0 krad) were passed through the irradiator with the cobalt source withdrawn from the treating chamber.

[1] Now with Massachusetts Agricultural Experiment Station, Amherst.

[2] Market Quality Research Division, ARS, Fresno, Calif.

[3] Italic numbers in parentheses refer to items in "Literature Cited," p. 23.

Following irradiation, most fruits were stored at temperatures and for periods of time that simulated actual transit and marketing. The commodities were examined periodically for changes in condition. Grapes and oranges were shipped by rail to Chicago or New York City and were examined in our laboratories in these cities.

Most of the data were statistically analyzed by an analysis of variance. The entire array of means for any analysis was separated by the Duncan multiple-range test, but only the more meaningful comparisons were given in the tables. In some tests an adequate estimate of error variance could not be obtained by an analysis of variance, hence the data were analyzed by the chi-square contingency-table method (*5*, pp. 38–72).

No formal taste panel evaluations were made. Statements in this report concerning flavor differences are made only when differences were distinctly evident to the investigators.

A number of samples of irradiated fruits were sent to the Southwestern Radiological Health Laboratory in Las Vegas, Nev., for analysis of radioactive materials. No evidence of radioactive contamination or induced radioactivity was found.

EXPERIMENTAL PROCEDURES AND RESULTS

Peaches

The peach varieties Cardinal, Redglobe, Suncrest, Fay Elberta, and Halloween were used. The fruits were separated into two maturity classes on the basis of a green or yellow ground color. Each sample consisted of 20 fruits for all varieties except Cardinal, for which 40-fruit samples were used. All the Cardinal peaches were irradiated in vented polyethylene bags, and all the Redglobe peaches in paper bags; half of the fruits of the other varieties were irradiated in vented polyethylene and half in paper. Fruits were irradiated with doses of 0, 45, 125, 200, or 300 krad. Following irradiation, Cardinal peaches were stored for 6 days at 37° F. and then ripened at 59° for 4 or 5 days; Redglobe peaches were stored under the same conditions, but ripened for 0, 6, or 9 days. For the other varieties, one lot was placed immediately at 59° for ripening and another lot was stored for 6 days at 37° before ripening. The ripening periods were 3 days for Suncrest, 5 days for Halloween, and 7 days for Fay Elberta. These variations in ripening periods were due to different initial maturities of the peaches.

Firmness of the fruits was determined with a Magness-Taylor pressure tester, using a $\frac{7}{16}$-inch plunger. Redglobe, Fay Elberta, and Halloween peaches were rated for ground color on a scale of 1 = green, 2 = mostly green but some yellow, 3 = mostly yellow but some green, and 4 = yellow. These varieties were also rated for red color with a scale of 1 = no pink or red, 2 = less than 25 percent of surface area pink or red, 3 = 25 to 75 percent pink or red, and 4 = more than 75 percent pink or red. Weight loss during the holding period was determined for each variety except Cardinal. The statistical significance of the effects of the various factors on decay, weight loss, firmness, and color of the peaches is shown in the appendix (table 34).

Decay occurred only in Cardinal, Fay Elberta, and Halloween peaches, and among these varieties the response to radiation varied (table 1). Radiation reduced the percentage of fruit with decay of Fay Elberta and Halloween but increased decay of Cardinal peaches. The latter response occurred for at least two reasons: First, radiation injured the skin of the peaches, causing it to slough off upon contact, and second, it failed to inactivate spores of *Rhizopus* spp. Handling the packages broke the skin of the fruits, which then were invaded rapidly by *Rhizopus*. Decay of Fay Elberta and Halloween, primarily brown rot caused by *Monilinia fructicola*, was controlled by radiation. The response to dose varied with the maturity of the fruits, but in general, 45 krad substantially reduced decay of Fay Elberta and Halloween peaches.

Radiation affected weight loss during storage and ripening of Redglobe, Fay Elberta, and Halloween peaches, but not of Suncrest peaches (table 2). Weight loss from Redglobe and Fay Elberta peaches packaged in paper was significantly greater following irradiation with 200 or 300 krad than in check lots, but this effect was avoided by packaging the fruits in polyethylene. In contrast, weight loss from Halloween peaches was significantly *reduced* by radiation when the fruits had been packaged in polyethylene.

Radiation doses of 200 krad on Cardinal and 300 krad on Redglobe resulted in significantly softer fruits after ripening (table 3), but had no effect on firmness of Suncrest, Fay Elberta, and Halloween peaches.

The yellow ground color and the red blush of the peaches were influenced by radiation. Exposure to 45 to 300 krad hastened the change from green to yellow ground color of Redglobe and Halloween peaches (table 4). This effect was apparent only during the early stages of ripening. The red color was enhanced by 125 to 300 krad on Redglobe and Halloween, and by 200 and 300 krad on Elberta (table 5). After ripening, the red color on these fruits was more intense, and a pink color had developed on the normally yellow areas of the fruits irradiated with doses of 200 or 300 krad.

TABLE 1.—*Incidence of decay during ripening of peaches as a function of radiation dose, variety, and maturity* [1]

Variety and maturity (ground color)	0 krad	45 krad	125 krad	200 krad	300 krad
	Percent	*Percent*	*Percent*	*Percent*	*Percent*
Cardinal:					
Green	2 a	17 a	18 a	46 b	51 b
Yellow	22 a	47 b	53 bc	66 bc	73 c
Average	12 a	32 b	36 b	56 c	62 c
Fay Elberta:					
Green	23 a	0 b	3 b	0 b	1 b
Yellow	8 a	10 a	3 a	1 a	5 a
Average	15 a	5 b	3 b	1 b	3 b
Halloween:					
Green	18 a	9 ab	8 ab	1 b	0 b
Yellow	32 a	14 b	5 b	5 b	5 b
Average	25 a	11 b	6 b	3 b	3 b

[1] Any 2 means on a given line not followed by the same letter are significantly different from each other at the 1-percent level.

TABLE 2.—*Weight loss of peaches during ripening as a function of radiation dose, variety, and packaging material* [1]

Variety and packaging material	0 krad	45 krad	125 krad	200 krad	300 krad
	Percent	*Percent*	*Percent*	*Percent*	*Percent*
Redglobe, paper	3.6 ab	3.5 a	3.7 abc	3.8 bc	4.0 c
Suncrest:					
Paper	1.4 a	1.7 a	1.8 a	2.0 a	1.9 a
Vented polyethylene	.7 a	.3 a	.6 a	.7 a	.5 a
Fay Elberta:					
Paper	2.5 a	2.5 a	2.9 ab	3.1 b	3.0 b
Vented polyethylene	.7 a	.6 a	.7 a	.6 a	.8 a
Halloween:					
Paper	3.3 a	3.1 a	2.4 b	3.0 a	2.9 a
Vented polyethylene	.9 a	.6 ab	.4 b	.4 b	.4 b

[1] Any 2 means on a given line not followed by the same letter are significantly different from each other at the 1-percent level.

TABLE 3.—*Firmness of ripened peaches as a function of radiation dose and variety* [1]

Variety	0 krad	45 krad	125 krad	200 krad	300 krad
	Pounds	*Pounds*	*Pounds*	*Pounds*	*Pounds*
Cardinal	4.8 a	3.9 ab	3.4 ab	3.0 b	2.6 b
Redglobe	4.5 a	4.2 a	4.1 a	3.6 ab	3.4 b
Suncrest	3.0 a	3.6 a	3.2 a	3.3 a	3.1 a
Fay Elberta	3.7 a	3.6 a	3.6 a	3.7 a	3.5 a
Halloween	4.6 a	4.5 a	4.4 a	4.3 a	4.3 a

[1] Any 2 means on a given line not followed by the same letter are significantly different from each other at the 1-percent level.

Enhancement of red color was more pronounced on the less mature fruits of Elberta and Halloween than on the more mature ones.

Radiation lowered the quality of the fruits. Peaches irradiated with 200 or 300 krad had distinctly less flavor when ripe than the controls. These doses also resulted in a softer, less desirable texture of Cardinal peaches. Irradiated Suncrest peaches had less aroma than the controls. Suncrest peaches that had been packed in polyethylene bags before irradiation were affected with brown, sunken lesions on the skin after ripening. This disorder was clearly associated with radiation (table 6), but appeared only on fruits that had been packed in polyethylene. Since water had condensed on these fruits prior to irradiation,

TABLE 4.—*Ground color of peaches as a function of radiation dose, variety, and storage and ripening time* [1]

Variety and length of storage at 37° F. and of ripening at 59°	0 krad	45 krad	125 krad	200 krad	300 krad
	Rating	*Rating*	*Rating*	*Rating*	*Rating*
Redglobe, stored 6 days and—					
No ripening period	2.8 a	3.3 b	3.4 bc	3.7 c	3.7 c
Ripened 6 days	3.6 a	3.7 a	3.8 a	3.8 a	3.9 a
Ripened 9 days	3.9 a	4.0 a	4.0 a	4.0 a	4.0 a
Elberta:					
No storage, ripened 7 days	2.9 a	3.0 a	3.2 a	3.1 a	3.3 a
Stored 6 days, ripened 7 days	3.2 a	3.6 a	3.4 a	3.5 a	3.5 a
Halloween:					
No storage, ripened 5 days	3.4 a	3.7 b	3.7 b	3.8 b	3.9 b
Stored 6 days, ripened 5 days	3.7 a	3.7 a	3.7 a	3.7 a	3.7 a

[1] Rating scale: 1=green; 2=mostly green but some yellow; 3=mostly yellow but some green; 4=yellow.
Any 2 means on a given line not followed by the same letter are significantly different from each other at the 1-percent level.

TABLE 5.—*Red color of peaches as a function of variety, radiation dose, and maturity* [1]

Variety and maturity (ground color)	0 krad	45 krad	125 krad	200 krad	300 krad
	Rating	*Rating*	*Rating*	*Rating*	*Rating*
Redglobe:					
Green	2.7 a	2.8 a	3.0 ab	3.2 b	3.3 b
Yellow	3.3 a	3.5 a	3.7 b	3.8 b	3.8 b
Average	3.0 a	3.1 a	3.4 b	3.5 b	3.5 b
Elberta:					
Green	2.4 a	2.3 a	2.5 a	2.7 b	3.3 c
Yellow	3.3 a	3.4 a	3.4 a	3.6 ab	3.7 b
Average	2.9 a	2.9 a	3.0 a	3.2 b	3.5 c
Halloween:					
Green	2.9 a	2.9 a	3.2 b	3.5 c	3.7 c
Yellow	3.6 a	3.7 a	3.7 a	3.9 b	3.9 b
Average	3.2 a	3.3 a	3.5 b	3.7 c	3.8 c

[1] Rating scale: 1=no pink or red; 2=less than 25 percent of surface area pink or red; 3=25–75 percent pink or red; 4=more than 75 percent pink or red.
Any 2 means on a given line not followed by the same letter are significantly different from each other at the 1-percent level.

TABLE 6.—*Incidence of brown, sunken lesions on peaches as a function of radiation dose and variety* [1]

Variety	0 krad	45 krad	125 krad	200 krad	300 krad
	Rating	*Rating*	*Rating*	*Rating*	*Rating*
Suncrest	1.1 a	1.1 a	1.7 ab	2.2 bc	2.8 c
Halloween [2]	1.0 a	1.0 a	1.6 b	2.3 c	3.0 d

[1] Rating scale: 1=none; 2=trace; 3=moderate; 4=severe.
Any 2 means within a variety not followed by the same letter are significantly different from each other at the 1-percent level.
[2] Fruits were wet when irradiated.

a relationship between the wetness of the fruits and the radiation injury was suspected. The disorder was independent of maturity.

In a second experiment with Halloween peaches, the following factors were tested: (1) the influence of oxygen (O_2) concentration on fruit softening during irradiation; (2) the effect of radiation on softening following treatment; and (3) the effect of water on peaches during irradiation on subsequent spotting of the fruits.

The fruits were put in polyethylene bags; one set of samples contained fruits wetted with tap water before bagging. Half of the bags were flushed with nitrogen (N_2) for 1 hour before irradiation. After irradiation, O_2 concentration averaged 4.1 percent in the flushed samples and 14.9 percent in the unflushed samples. The bags were vented after irradiation and one set of samples was immediately examined. The remaining samples were stored at 37° F. for 6

days and then ripened at 59° for 0, 2, or 4 days before examination.

Radiation doses of 125 to 300 krad significantly softened the peaches during irradiation, and the softening was not reduced by a low oxygen atmosphere (table 7). However, at the second and third examinations, the fruits irradiated in the low oxygen atmosphere were somewhat firmer than those irradiated in air. As the peaches ripened, differences in firmness between irradiated and unirradiated fruits became less, and when the peaches were fully ripe there were no longer any differences among the treatments.

Fruits that were wet when irradiated developed lesions identical to those observed on Suncrest. Severity of the disorder was directly proportional to dosage above 45 krad (table 6). The disorder appeared during storage at 37° F., but became worse at 59°. Such lesions did not develop on peaches that were dry when irradiated.

There was no significant effect of the treatments on ground color, red color, or decay in this experiment, since most of the examinations were made before the fruits ripened.

Nectarines

Two varieties of nectarines, Sun Grand and Late Le Grand, were irradiated. Before irradiation, Sun Grand fruits were separated into two maturity classes according to a green or a yellow ground color. The Late Le Grand nectarines came from two distinct lots, one a relatively ripe, waxed lot and the other a less ripe, unwaxed lot. The fruits of both varieties were packed in paper bags, 20 fruits per sample, and irradiated with 0, 45, 125, 200, or 300 krad.

Following irradiation, one lot of each variety was ripened for 5 days at 59° F., and two lots were stored for 7 days at 37°, then ripened at 59° for 4 or 7 days before examination. Weight loss from both varieties of fruit was determined, and all fruits were tested with a Magness-Taylor pressure tester using a 7/16-inch plunger. The Late Le Grand nectarines were rated for red color, using a scale of 1=less than 25 percent of the surface red, 2=25 to 50 percent red, 3=50 to 75 percent red, and 4=more than 75 percent red, and for ground color, using a scale of 1=green, 2=mostly green but some yellow, 3=mostly yellow but some green, and 4=yellow. No ratings of decay were made, because decay did not develop in these lots of fruit.

Irradiated fruits lost more weight than nonirradiated ones (table 8). However, the increase was not great and was significant only in fruit treated with 300 krad. Waxing the fruits reduced weight loss, but irradiated waxed fruit still lost more weight than nonirradiated waxed fruit, as shown by the nonsignificant interaction (appendix, table 35).

Radiation reduced softening of Late Le Grand during ripening (table 8). Fruits exposed to 200 or 300 krad were somewhat firmer than those exposed to 0 to 125 krad. Radiation did not affect the firmness of Sun Grand nectarines.

Ground color, but not the red color, of Late Le Grand nectarines was affected by radiation (table 8). All radiation doses resulted in fruits that were yellower than the controls after ripening. The significant effect of waxing on both ground color and red color (appendix, table 35) probably was a reflection of the more advanced maturity of these fruits, rather than a consequence of the

TABLE 7.—*Firmness of Halloween peaches as a function of radiation dose, oxygen concentration, and length of storage and ripening* [1]

When examined, and oxygen concentration immediately after irradiation	0 krad	45 krad	125 krad	200 krad	300 krad
Immediately after irradiation:	*Pounds*	*Pounds*	*Pounds*	*Pounds*	*Pounds*
14.9% oxygen	21 a	17 a	10 b	9 b	7 b
4.1% oxygen	19 a	18 a	11 b	10 b	9 b
Stored 6 days at 37° F. and—					
No ripening period: [2]					
14.9% oxygen	22 a	20 a	13 b	11 bc	7 c
4.1% oxygen	22 a	21 a	15 b	14 bc	10 c
Ripened 2 days at 59° F.:					
14.9% oxygen	10 a	7 a	6 a	5 a	6 a
4.1% oxygen	15 a	8 b	7 b	6 b	7 b
Ripened 4 days at 59° F.:					
14.9% oxygen	5 a	4 a	4 a	4 a	4 a
4.1% oxygen	5 a	4 a	4 a	4 a	4 a

[1] Any 2 means on a given line not followed by the same letter are significantly different from each other at the 1-percent level.

[2] Fruits in these samples were tested while still cold, which may account for the values being somewhat higher than at the first examination.

776-703 O—65——2

waxing itself. Irradiated Sun Grand fruits appeared to be both yellower and redder than the controls, but no quantitative data were recorded for this variety.

The Late Le Grand nectarines that had received 200 or 300 krad had less flavor when ripe than those exposed to 0 or 125 krad. Irradiation did not affect the flavor of Sun Grand, but the fruits had a smoother, more buttery texture following treatment with 200 or 300 krad.

A second test with Late Le Grand nectarines was made using fruits obtained from an orchard with a high incidence of brown rot. Half of these fruits were packed in vented polyethylene and half in paper bags, using 20 fruits per sample. Following irradiation with 0, 100, 200, 300, or 400 krad, the nectarines were stored at 59° F. for 5 or 7 days, at which times they were inspected for decay and tested for firmness.

Radiation doses of 200 to 400 krad controlled brown rot on these fruits (table 9). The treatments had no significant effect on fruit firmness, and no apparent effect on fruit color. However, doses of 200 to 400 krad adversely affected the flavor of the ripened fruits.

TABLE 8.—*Weight loss, firmness, and color of nectarines as a function of radiation dose and variety* [1]

Criteria and variety	0 krad	45 krad	125 krad	200 krad	300 krad
Weight loss:	*Percent*	*Percent*	*Percent*	*Percent*	*Percent*
Sun Grand	3.9 ab	3.7 a	4.2 ab	4.2 ab	4.4 b
Late Le Grand	2.1 a	2.3 ab	2.4 ab	2.6 ab	2.8 b
Firmness:	*Pounds*	*Pounds*	*Pounds*	*Pounds*	*Pounds*
Sun Grand	3.3 a	3.1 a	3.2 a	3.3 a	3.2 a
Late Le Grand	5.6 a	5.7 a	5.6 a	6.3 b	7.0 c
Color (Late Le Grand):	*Rating*	*Rating*	*Rating*	*Rating*	*Rating*
Red color [2]	3.1 a	3.1 a	3.0 a	3.2 a	3.3 a
Ground color [3]	3.3 a	3.6 b	3.7 b	3.6 b	3.8 b

[1] Any 2 means within a variety not followed by the same letter are significantly different from each other at the 1-percent level.

[2] Rating scale: 1=less than 25 percent of surface red; 2=25 to 50 percent red; 3=50 to 75 percent red; 4=more than 75 percent red.

[3] Rating scale: 1=green; 2=mostly green but some yellow; 3=mostly yellow but some green; 4=yellow.

TABLE 9.—*Firmness and decay of Late Le Grand nectarines as a function of radiation dose and storage time* [1]

Criteria and length of storage at 59° F.	0 krad	45 krad	125 krad	200 krad	300 krad
Firmness:	*Pounds*	*Pounds*	*Pounds*	*Pounds*	*Pounds*
5 days	5 a	5 a	6 a	7 a	7 a
7 days	4 a	4 a	4 a	5 a	6 a
Decay (percentage of fruits):	*Percent*	*Percent*	*Percent*	*Percent*	*Percent*
5 days	43 a	23 a	0 b	0 b	3 b
7 days	55 a	50 a	3 b	8 b	0 b

[1] Any 2 means on a given line not followed by the same letter are significantly different from each other at the 1-percent level.

Plums

Santa Rosa, Eldorado, Wickson, and Laroda plums were irradiated according to the conditions summarized in table 10, which also gives the storage and ripening conditions and the quality factors evaluated. The type and number of maturity classes and subclasses depended upon the condition of the plums, and the time fruit was held at 59° F. depended upon the rate of ripening of the fruits. In all tests, the plums were irradiated and stored in paper bags. The hardness of each fruit was measured with a durometer;[4] the internal condition was determined by cutting a slice from one side of each fruit; and the soluble solids content of juice from 10 fruits in each sample was measured with a hand refractometer. In Santa Rosa plums (Test 2) stored 42 days at 34°, no juice could be extracted for soluble solids determination.

Slight decay developed only on Santa Rosa and Eldorado plums. Irradiation with 500 krad

[4] Type 00, Shore Instrument & Manufacturing Co.

reduced decay of Eldorado plums. Doses up to 300 krad did not reduce decay of Santa Rosa plums (table 11).

Radiation inhibited the coloring of plums. Although some differences in color among treatments were observed in all tests, the effect on color was evaluated in only three of them. Radiation doses of 125 to 300 krad inhibited the development of blue color on Santa Rosa plums (table 12), and this inhibition was independent of fruit maturity, storage time at 34° F., or ripening at 59° (appendix, table 36). On Laroda plums, 125 to 500 krad inhibited development of blue color independently of maturity and storage time, but not independently of ripening time; the inhibition became more pronounced as the fruits ripened (table 12). Development of blue color on Eldorado plums was inhibited by 500 krad, but the inhibition was transient and the irradiated plums developed full blue color by the last examination time. There was a significant interaction of radiation and storage time for Eldorado (appendix, table 36).

Plums were softened by radiation. Fruits exposed to 300 or 500 krad were softer than the controls in all tests, and in most tests those exposed to 200 or 250 krad were significantly softer than the controls (table 13). The softening was independent of maturity, storage, or ripening time for Santa Rosa and Wickson plums (appendix, table 36). However, as postirradiation storage time of Eldorado plums was extended, the dose that resulted in significantly softer fruits became progressively lower (table 14). In Laroda plums, the radiation-induced softening became less significant as both storage and ripening time progressed (table 14). Although the differences in fruit softness among treatments were numerically small, the closely related textural differences were large; the texture of the plums exposed to 250 to 500 krad was very soft and buttery, and was distinctly different from that of the controls.

TABLE 10.—*Experimental conditions of radiation tests with plums*

Test number	Variety	Sample size	Radiation doses	Maturity classes		Storage and ripening conditions	Quality criteria evaluated
				Type	Number		
		Fruits	*Krad*				
1	Santa Rosa	10	0, 125, 200, 300	Color [1]	2	8, 11, 15 days at 59°	Hardness, soluble solids, internal conditions.
2	do	12	0, 125, 200, 300	Specific gravity [2]	3	14, 28, 42 days at 34° plus 0, 4, 7 days at 59°.	As in Test 1, plus color.[3]
3	do	12	0, 125, 250, 500	Specific gravity [2] and color.[4]	4	6 days at 34° plus 2, 5, 7 days at 59°.	As in Test 1.
4	Eldorado	17	0, 125, 250, 500	Specific gravity [2]	2	0, 14, 28 days at 34° plus 0, 5, 10 days at 59°.	As in Test 2.
5	Wickson	20	0, 125, 250, 500	Color [5]	2	0, 7 days at 34° plus 5, 8, 11 days at 59°.	As in Test 1.
6	Laroda	14	0, 125, 250, 500	Specific gravity [2] and color. [5]	4	0, 10 days at 34° plus 3, 7 days at 59°.	As in Test 2.

[1] Classes (2): 0 to 25 and 26 to 75 percent surface area red.

[2] Classes were separated by flotation at room temperature in a series of sodium chloride solutions of different concentrations: *Test 2*—5 to 6, 6 to 7, and 7 to 8 percent; *Test 3*—6 to 7 and 7 to 8 percent; *Test 4*—5 to 6 and 6 to 7 percent; *Test 6*—5 to 6 and 6 to 7 percent.

[3] For color scales, see table 12, footnote 1.

[4] Classes: 0 to 50 and 50 to 75 percent surface area green.

[5] Classes: 0 to 50 and 50 to 100 percent of ground color yellow.

TABLE 11.—*Decay of plums during storage as a function of radiation dose and variety* [1]

Variety	0 krad	125 krad	200 krad	250 krad	300 krad	500 krad
	Percent	*Percent*	*Percent*	*Percent*	*Percent*	*Percent*
Santa Rosa (Test 1)	2 a	7 a	6 a	----------	4 a	----------
Santa Rosa (Test 2)	7 a	6 a	5 a	----------	3 a	----------
Eldorado	8 a	10 a	----------	8 a	----------	2 b

[1] Any 2 means on a given line not followed by the same letter are significantly different from each other at the 1-percent level.

TABLE 12.—*Coloring of plums as a function of radiation dose, variety, storage, and ripening time* [1]

Variety and length of storage at 34° F. and ripening at 59° F.	0 krad	125 krad	200 krad	250 krad	300 krad	500 krad
SANTA ROSA						
Stored 2, 4, and 6 weeks and ripened 0, 4, and 7 days	*Rating* 3.8 a	*Rating* 3.4 b	*Rating* 3.4 b	*Rating* ----------	*Rating* 3.3 b	*Rating* ----------
ELDORADO						
No storage, and ripened for—						
5 days	2.6 a	2.5 a	----------	2.6 a	----------	1.9 b
10 days	2.4 a	2.4 a	----------	2.4 a	----------	2.0 b
15 days	3.0 a	3.0 a	----------	3.0 a	----------	3.0 a
2 weeks' storage, and ripened for—						
0 days	1.7 a	1.6 a	----------	1.8 a	----------	1.6 a
5 days	2.2 a	2.4 a	----------	2.2 a	----------	1.7 b
10 days	3.0 a	3.0 a	----------	3.0 a	----------	3.0 a
4 weeks' storage, and ripened for—						
0 days	1.4 ab	1.7 b	----------	1.3 a	----------	1.4 a
5 days	2.8 a	3.0 a	----------	2.7 a	----------	1.9 b
10 days	3.0 a	2.9 a	----------	2.9 a	----------	2.8 a
LARODA						
No storage and 1.5 weeks' storage, and ripened for—						
3 days	2.7 a	2.4 b	----------	2.3 b	----------	1.9 c
7 days	3.8 a	3.0 b	----------	2.7 c	----------	2.4 c

[1] Rating scales:

SANTA ROSA: 1=less than 25 percent surface area red; 2=25 to 75 percent red; 3=more than 75 percent red, no blue; 4=red, plus 75 percent or less blue; 5=more than 75 percent blue.

ELDORADO: 1=less than 25 percent surface area blue; 2=25 to 75 percent blue; 3=more than 75 percent blue.

LARODA: 1=green ground color, no blue color; 2=yellow ground color, no blue color; 3=less than 25 percent surface area blue; 4=25 to 75 percent blue; 5=more than 75 percent blue.

Any 2 means on a given line not followed by the same letter are significantly different from each other at the 1-percent level.

TABLE 13.—*Hardness of plums after ripening as a function of radiation dose and variety* [1]

Variety	0 krad	125 krad	200 krad	250 krad	300 krad	500 krad
	Units	*Units*	*Units*	*Units*	*Units*	*Units*
Santa Rosa (Test 1)	79 ab	79 ab	77 b	----------	77 b	----------
Santa Rosa (Test 2)	79 a	77 b	75 c	----------	75 c	----------
Santa Rosa (Test 3)	82 a	81 ab	----------	79 b	----------	76 c
Eldorado	78 a	76 ab	----------	75 b	----------	73 c
Wickson	73 a	72 ab	----------	71 ab	----------	68 c
Laroda	82 a	81 a	----------	79 b	----------	77 c

[1] Any 2 means on a given line not followed by the same letter are significantly different from each other at the 1-percent level.

Radiation did not have a consistent effect on the soluble solids concentration in plums (table 15). Doses of 200 and 300 krad decreased soluble solids in Santa Rosa (Test 1); there were no differences among treatments of Santa Rosa (Test 2) or of Wickson; and 500 krad increased soluble solids in Santa Rosa (Test 3), Eldorado, and Laroda. When differences among treatments did exist, they invariably were slight. The fact that soluble solids concentrations of both Santa Rosa (Test 3) and Laroda increased only after ripening suggests that the increase may be an indirect effect of radiation, caused by a greater loss of moisture from these irradiated fruits than from the controls.

Plums of all four varieties developed internal breakdown late in their storage life. This breakdown appeared as dark, water-soaked areas in the flesh, and when it was severe the flesh became very gelatinous. Irradiated plums developed breakdown sooner and more severely than the controls

TABLE 14.—*Hardness of irradiated plums as a function of radiation dose, variety, and storage and ripening time* [1]

Variety and length of storage at 34° F. and of ripening at 59° F.	0 krad	125 krad	250 krad	500 krad
ELDORADO				
	Units	*Units*	*Units*	*Units*
No storage, and ripened 5, 10, and 15 days	76 a	77 a	75 a	72 b
14 days' storage, and ripened 0, 5, and 10 days	80 a	79 a	74 b	72 b
28 days' storage, and ripened 0, 5, and 10 days	77 a	72 b	75 ab	74 ab
LARODA				
No storage, and—				
Ripened 3 days	87 a	86 a	83 b	82 b
Ripened 7 days	81 a	82 a	80 a	74 b
Average	84 a	84 a	82 b	78 c
10 days' storage, and—				
Ripened 3 days	83 a	81 ab	79 c	80 bc
Ripened 7 days	75 a	75 a	74 a	70 b
Average	79 a	78 a	76 b	75 b

[1] Any 2 means on a given line not followed by the same letter are significantly different from each other at the 1-percent level.

TABLE 15.—*Soluble solids concentration in irradiated plums, as a function of radiation dose, variety, and storage time* [1]

Variety and length of storage at 59° F.	0 krad	125 krad	200 krad	250 krad	300 krad	500 krad
Santa Rosa:	*Percent*	*Percent*	*Percent*	*Percent*	*Percent*	*Percent*
Test 1: 8, 11, and 15 days	12.8 a	13.2 a	11.7 b	----------	12.1 b	----------
Test 2: 0, 4, and 7 days	14.2 a	14.0 a	14.0 a	----------	13.8 a	----------
Test 3:						
2 days	14.4 a	14.2 a	----------	14.2 a	----------	13.9 a
5 days	14.5 a	14.6 a	----------	14.3 a	----------	14.3 a
7 days	13.7 a	14.1 ab	----------	13.9 ab	----------	14.4 b
Eldorado: 0, 5, 10, and 15 days	13.7 ab	13.7 ab	----------	13.4 a	----------	13.9 b
Wickson: 5, 8, and 11 days	11.6 a	11.7 a	----------	11.8 a	----------	11.9 a
Laroda:						
3 days	13.0 a	12.9 a	----------	12.8 a	----------	13.0 a
7 days	12.9 ab	12.7 a	----------	12.8 a	----------	13.1 b

[1] Any 2 means on a given line not followed by the same letter are significantly different from each other at the 1-percent level.

(table 16), and this breakdown signaled the end of the market life of the plums.

Exposure of Santa Rosa plums to 500 krad resulted in the formation of large, clearly defined brown areas on the fruit surface which were apparent at all examinations. With Eldorado plums, 500 krad weakened the skin so that it broke under slight pressure.

Doses of 250 krad or higher generally impaired the flavor of plums, especially Eldorados, but texture was usually affected by smaller doses.

Pears

Bartlett pears, in samples of 18 fruits each, were irradiated with 0, 100, 200, 300, or 400 krad, stored at 32° F. for 0, 2, or 4 weeks, and then ripened at 59° for 4, 8, or 12 days. Before placing the fruits at 59°, half of the samples were treated with about 200 p.p.m. of ethylene for 24 hours. Color was measured by comparison with a California Bartlett Pear Maturity Standard Color Chart, and firmness was measured with a Magness-Taylor pressure tester, using a $\frac{5}{16}$-inch plunger.

Pears colored more slowly following irradiation. Overall, inhibition was significantly greater following each 100-krad increase of dose. However, both storage time at 32° F. and ripening time at 59° affected the response to radiation (appendix, table 37). In table 17, the data are presented as the averages both of storage and of ripening periods. Inhibition of coloring became less as storage time after irradiation lengthened; after

TABLE 16.—*Percentage of irradiated plums exhibiting internal breakdown as a function of radiation dose, variety, and storage and ripening time* [1]

Variety and length of storage at 34° F. and of ripening at 59° F.	0 krad	125 krad	200 krad	250 krad	300 krad	500 krad
SANTA ROSA (Test 2)	*Percent*	*Percent*	*Percent*	*Percent*	*Percent*	*Percent*
Stored 28 days; ripened 4 and 7 days	13	29	43	----------	67	----------
Stored 42 days; ripened 0, 4, and 7 days	51	74	78	----------	79	----------
ELDORADO						
Stored 14 days:						
Ripened 5 days	4	51	----------	59	----------	62
Ripened 10 days	0	78	----------	86	----------	100
Stored 28 days:						
No ripening period	10	68	----------	50	----------	38
Ripened 5 days	100	98	----------	100	----------	100
WICKSON						
No storage; ripened 5, 8, and 11 days	13	14	----------	15	----------	88
Stored 7 days; ripened 5, 8, and 11 days	33	63	----------	67	----------	86
LARODA						
Stored 10 days; ripened 7 days	38	43	----------	59	----------	98

[1] Means in a given line that are underlined once are significantly different from the check at the 1-percent level by chi-square analysis; means underlined twice are significantly different at the 0.1-percent level.

TABLE 17.—*Color development of Bartlett pears, as a function of radiation dose, storage and ripening time, and ethylene treatment* [1]

Treatment and length of storage at 32° F. and of ripening at 59°	0 krad	100 krad	200 krad	300 krad	400 krad
TREATED WITH ETHYLENE [2]					
Ripened 4 to 12 days after—	*Rating*	*Rating*	*Rating*	*Rating*	*Rating*
No storage	4.1 a	4.0 ab	3.8 bc	3.6 c	2.7 d
2 weeks' storage	4.4 a	4.4 a	4.1 b	3.5 c	2.9 d
4 weeks' storage	4.5 a	4.5 a	4.4 ab	4.2 b	3.5 c
Stored 0 to 4 weeks before—					
4 days' ripening	4.1 a	3.9 a	3.6 b	3.1 c	2.5 d
8 days' ripening	4.5 a	4.4 a	4.3 a	4.0 b	3.0 c
12 days' ripening	4.5 a	4.5 a	4.4 a	4.1 b	3.6 c
Average	4.4 a	4.3 a	4.1 b	3.8 c	3.0 d
NOT TREATED WITH ETHYLENE					
Ripened 4 to 12 days after—					
No storage	4.0 a	3.4 bc	3.5 b	3.2 c	2.8 d
2 weeks' storage	4.4 a	4.3 a	4.0 b	3.4 c	2.9 d
4 weeks' storage	4.5 a	4.4 a	4.3 a	4.0 b	3.3 c
Stored 0 to 4 weeks before—					
4 days' ripening	4.0 a	3.6 b	3.3 c	2.8 d	2.3 a
8 days' ripening	4.4 a	4.3 a	4.2 a	3.7 b	3.2 c
12 days' ripening	4.5 a	4.4 a	4.3 ab	4.1 b	3.5 c
Average	4.3 a	4.1 b	4.0 b	3.5 c	3.0 d

[1] Color determined by comparison with a California Bartlett Pear Maturity Standard Color Chart, with scale from 1 (completely green) to 4.5 (completely yellow). Any 2 means on a given line not followed by the same letter are significantly different from each other at the 1-percent level.

[2] Treated with about 200 p.p.m. for 24 hours immediately before ripening at 59°.

4 weeks at 32°, only the pears that had received 300 or 400 krad colored more slowly at 59° than the controls. Dose response changed as ripening time progressed; within 12 days at 59°, those pears treated with 100 or 200 krad attained nearly full yellow color, but those treated with 300 or 400 krad did not. The ethylene treatment stimulated color development slightly, but the ethylene stimulation was quantitatively much less than the radiation inhibition of coloring. Ethylene did not reverse the inhibition by radiation.

Pears softened markedly during the irradiation process; however, this initial softening was masked by a subsequent radiation-induced inhibition of softening during storage and ripening (table 18). The inhibition was less when the pears were stored at 32° F. before ripening than when they were ripened without storage. As with coloring, the effect of 100 or 200 krad on softening was inhibitory rather than preventive, merely retarding the rate of softening. The ethylene treatment neither had an overall effect on softening nor did it interact with radiation (table 37).

Late in the experiment, soft, watery breakdown caused by overripeness occurred in many fruits. Doses of 200 or 300 krad sharply reduced breakdown (table 19), but the effect was once again one of inhibition rather than prevention.

Radiation did not simply inhibit the rate of ripening, but rather, substantially altered ripening. Although 100 and 200 krad retarded overall coloring by only a few days, the irradiated fruits permanently retained some abnormal green mottling. Irradiated pears were objectionably dry and mealy after 100 and 200 krad and unacceptably mealy after 300 or 400 krad; they also failed to develop the characteristic flavor of ripe pears.

Strawberries

Two varieties of strawberries, Shasta and Z5A, were obtained from Salinas and Watsonville, Calif. The berries were transported to Fresno in a refrigerated truck and irradiated the day after harvest. Samples were not sorted to remove injured or decaying berries before treatment. Thirty-six pints of Z5A (18 from Salinas and 18 from Watsonville) and 18 pints of Shasta were irradiated with 0, 100, 200, or 300 krad. One lot of berries was held at 59° F. for 2 days to simulate air shipment, one lot was held at 37° F. for 5 days to simulate rail shipment, and one lot was held for 12 days to simulate storage and rail shipment. At the end of these storage periods, half of the samples were examined for decay and appearance, and half were held 1 more day at 59° to simulate retail marketing. The experiment was replicated three times with berries harvested on June 27, August 7, and August 27.

TABLE 18.—*Firmness of Bartlett pears as a function of radiation dose and storage and ripening time*[1]

Length of storage at 32° F. and ripening at 59° F.	0 krad	100 krad	200 krad	300 krad	400 krad
	Pounds	*Pounds*	*Pounds*	*Pounds*	*Pounds*
Immediately after irradiation	17.4	15.8	13.2	11.5	9.8
Ripened 4 to 12 days after—					
No storage	4.0 a	5.4 b	5.7 b	6.4 b	7.6 c
2 weeks' storage	3.3 a	3.7 a	4.3 a	6.8 b	8.9 c
4 weeks' storage	3.1 a	3.3 a	3.8 a	6.0 b	9.0 c
Stored 0 to 4 weeks before—					
Ripening 4 days	4.3 a	6.1 b	7.0 b	9.3 c	9.3 c
Ripening 8 days	3.0 a	3.2 a	3.7 a	5.4 b	8.7 c
Ripening 12 days	3.0 a	3.0 a	3.2 a	4.5 b	7.5 c

[1] Any 2 means on a given line not followed by the same letter are significantly different from each other at the 1-percent level.

TABLE 19.—*Watery breakdown of Bartlett pears as a function of radiation dose, and storage and ripening time* [1]

Length of storage at 32° F. and of ripening at 59° F.	0 krad	100 krad	200 krad	300 krad	400 krad
	Percent	*Percent*	*Percent*	*Percent*	*Percent*
Stored 2 weeks, ripened 12 days	100	100	69	0	0
Stored 4 weeks and—					
Ripened 8 days	22	31	25	0	0
Ripened 12 days	94	94	92	11	0

[1] Means on a given line that are underlined are significantly different from the check (0 krad) at the 0.1-percent level by chi-square analysis.

DIMENSIONS AND WEIGHT

Overall trailer dimensions-34' long × 8' wide × 12' high

Ground clearance-32''

Approximate weight of facility and trailer——90,500 lbs.

Approximate tractor weight——16,000 lbs.

total 106,500 lbs.

Bucket dimensions-15'' long × 8'' wide × 8'' high

LEGEND

A Source-cobalt 60
B Bucket
C Main shield
D Removable end
E Source mechanism and storage container
F Source positioning handle
G Drive for irradiation chamber assembly
H Drive for loading produce into entrance maze
I Entrance maze
J Drive for discharging produce onto exit conveyor
K Powered entrance conveyor height from ground at rear door-82''
L Powered exit conveyor height from ground at rear door-67''
M Portable powered loading conveyor
N Portable powered discharge conveyor
O Control console

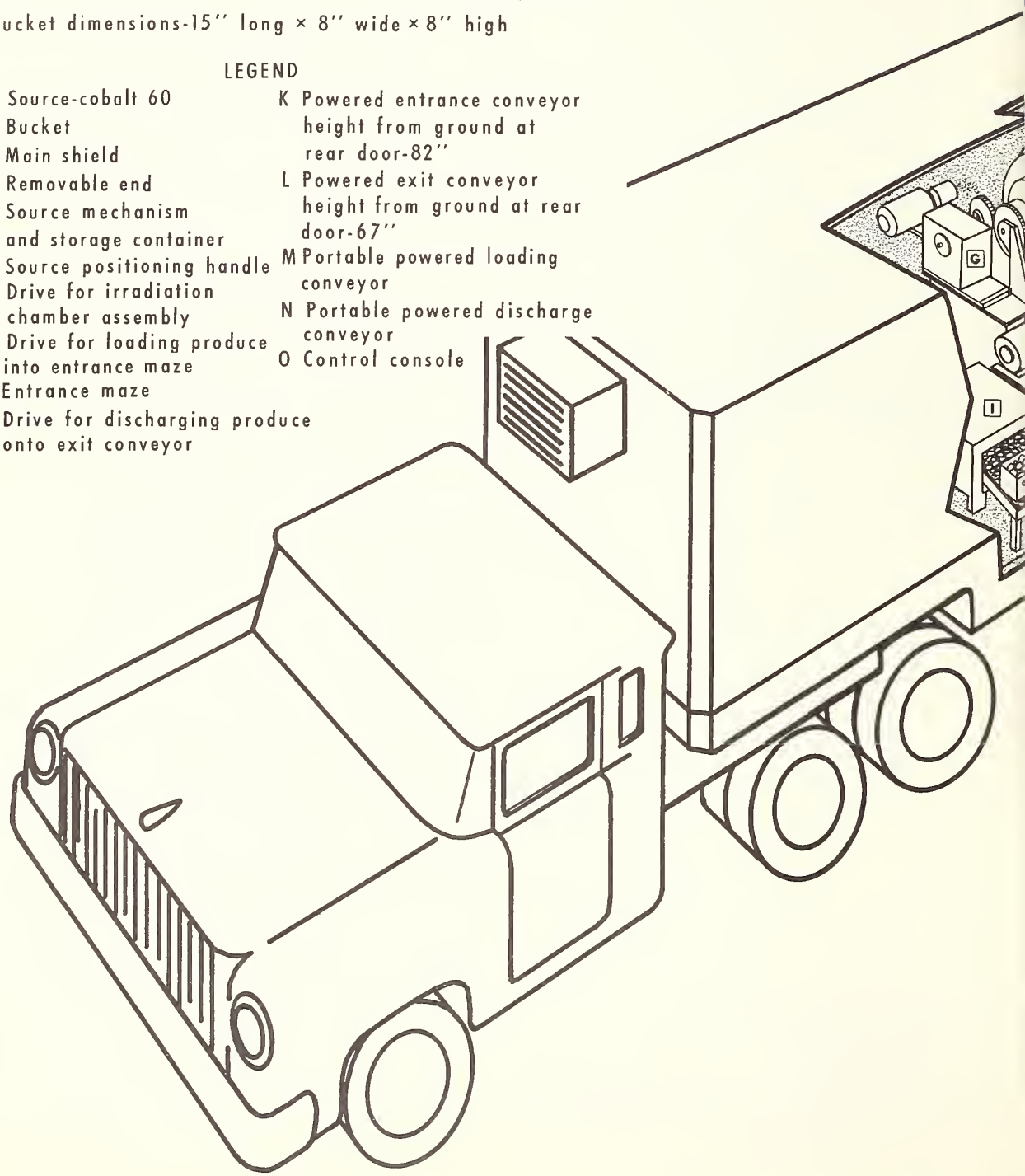

FIGURE 1.—Schematic drawing of mobile irradiator used in these exp

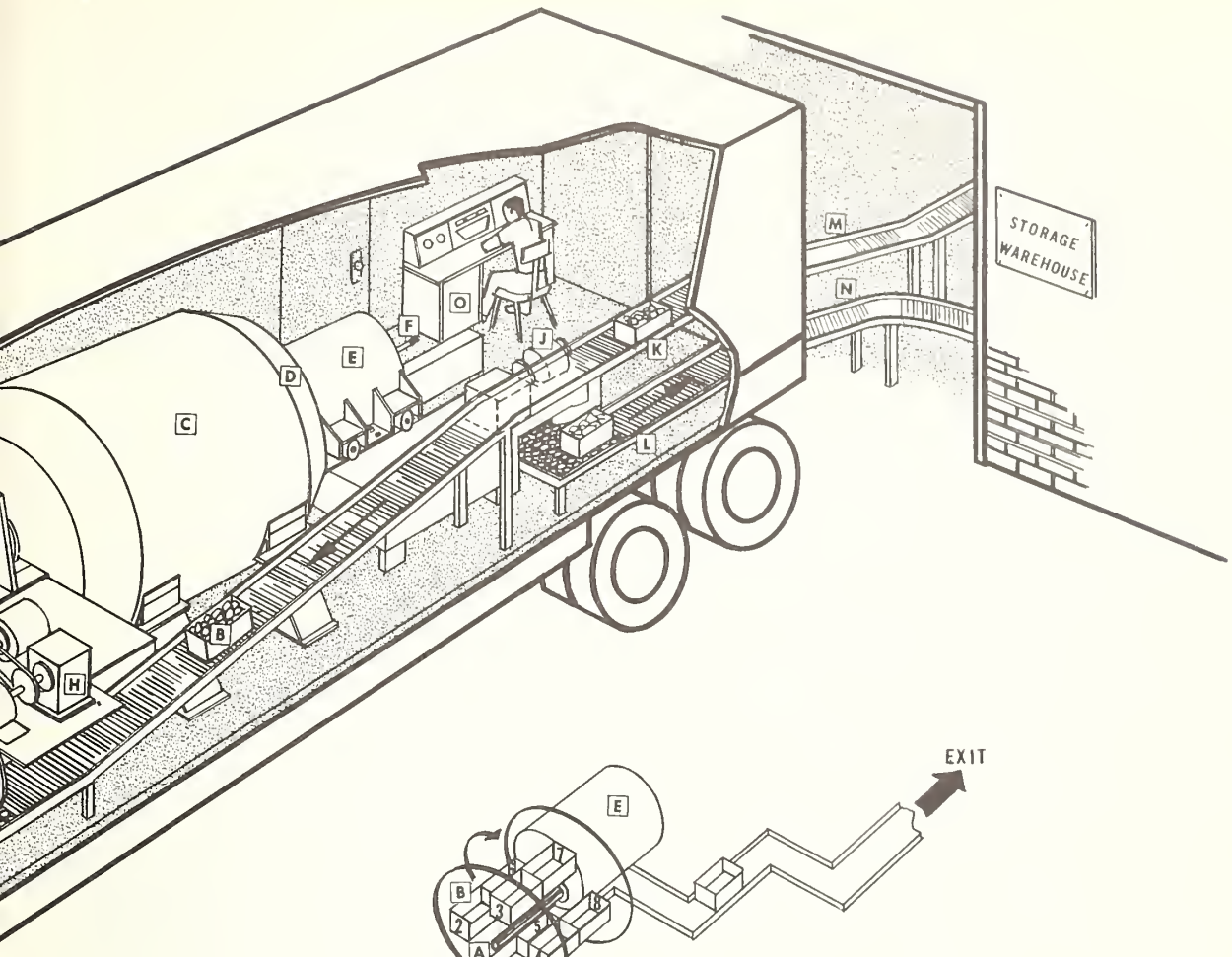

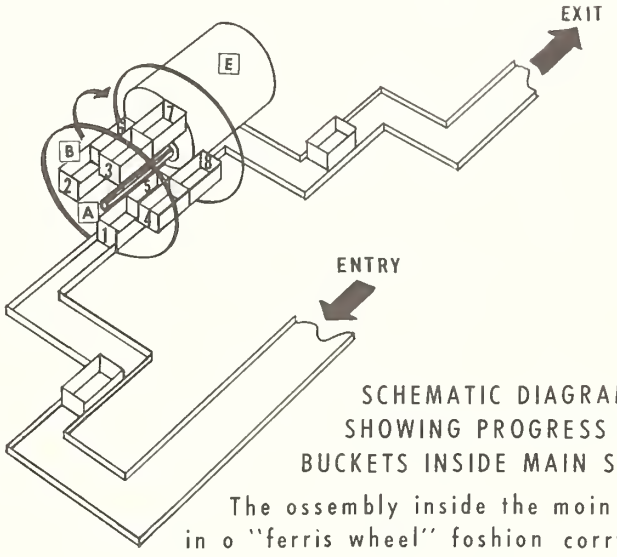

SCHEMATIC DIAGRAM
SHOWING PROGRESS OF
BUCKETS INSIDE MAIN SHIELD

The ossembly inside the moin shield rototes in o "ferris wheel" foshion corrying 4 sets of 2 buckets oround the cobalt 60 source. Each bucket completes two full circles oround the source. The wheel stops after eoch quorter turn to permit o new bucket to enter ond thereby push the bucket in position 5 onto the exit conveyor.

MOBILE DEMONSTRATION IRRADIATOR

ents. (Illustration courtesy of Atomic Energy of Canada, Limited.)

DIMENSIONS AND WEIGHT

Overall trailer dimensions-34` long × 8` wide × 12` high

Ground clearance-32``

Approximate weight of facility and trailer——90,500 lbs.

Approximate tractor weight——16,000 lbs.

total 106,500 lbs.

Bucket dimensions-15`` long × 8`` wide × 8`` high

LEGEND

A Source-cobalt 60
B Bucket
C Main shield
D Removable end
E Source mechanism and storage container
F Source positioning handle
G Drive for irradiation chamber assembly
H Drive for loading produce into entrance maze
I Entrance maze
J Drive for discharging produce onto exit conveyor
K Powered entrance conveyor height from ground at rear door-82``
L Powered exit conveyor height from ground at rear door-67``
M Portable powered loading conveyor
N Portable powered discharge conveyor
O Control console

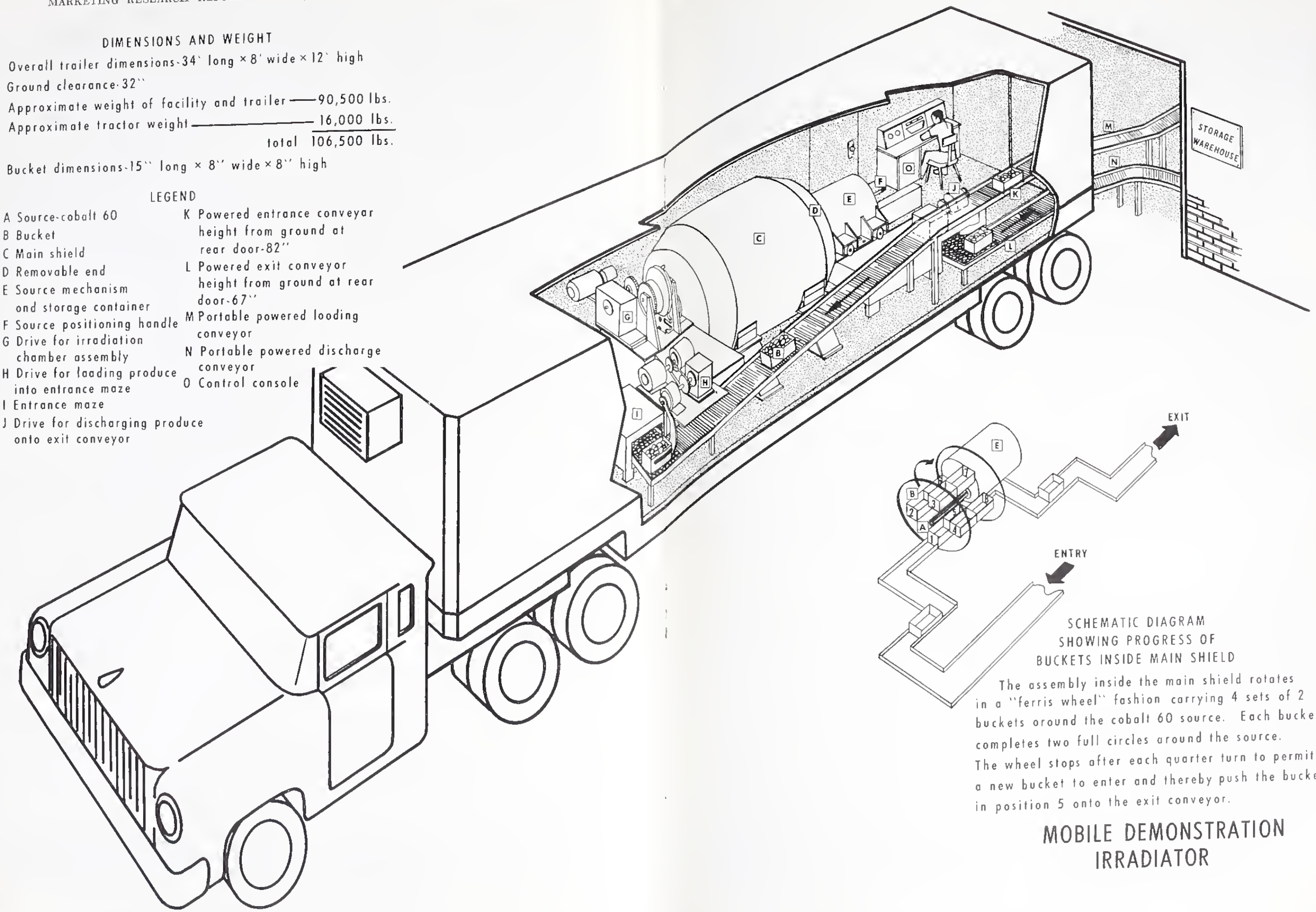

SCHEMATIC DIAGRAM SHOWING PROGRESS OF BUCKETS INSIDE MAIN SHIELD

The assembly inside the main shield rotates in a "ferris wheel" fashion carrying 4 sets of 2 buckets around the cobalt 60 source. Each bucket completes two full circles around the source. The wheel stops after each quarter turn to permit a new bucket to enter and thereby push the bucket in position 5 onto the exit conveyor.

MOBILE DEMONSTRATION IRRADIATOR

FIGURE 1.—Schematic drawing of mobile irradiator used in these experiments. (Illustration courtesy of Atomic Energy of Canada, Limited.)

Radiation reduced decay during storage and during most of the simulated marketing periods (table 20), the response being about the same for both varieties. The reduction of decay became more pronounced as holding time was extended, and the significant interactions of radiation with holding periods (appendix, table 38) are due to rapid decay of unirradiated berries and slow decay of irradiated ones. Radiation extended the shelf life of the strawberries by several days. Three hundred krad was no more effective than 200 krad in reducing decay, and berries were noticeably softened by 300 krad. No adverse effects were noted following 100 or 200 krad.

Figs

Fresh figs are highly perishable fruits, subject to attack by surface molds. To try to control these molds, Calimyrna, Mission, and Kadota figs were irradiated with 0, 100, 200, 300, or 400 krad. In one test, Calimyrna figs (22 fruits per sample) were irradiated, then stored at 59° F. for 3, 5, or 7 days, or at 38° for 8 days plus 0, 2, or 4 additional days at 59°. In another test, Calimyrna (15 fruits per sample) and Mission (28 fruits per sample) figs were irradiated, then stored for 3 or 5 days at 70°, or for 11 days at 38° plus 0 or 3 days at 70°. Kadota figs (24 fruits per sample) from both the Fresno and Brentwood growing areas were irradiated, then held for 0 or 6 days at 38° plus 2 or 4 days at 59° before examination. When rating the fruits for decay, fruits with dark areas of incipient decay were considered as being decayed.

Radiation significantly reduced decay of the fruits. Doses of 200 to 400 krad sharply reduced decay of Calimyrna figs for several days at 59° or 70° F. (table 21). The longer the fruits were held at 38°, the shorter was the radiation-induced extension of shelf life at 59° or 70°; radiation retarded but did not prevent decay. Two hundred krad significantly reduced decay of Mission figs, although 300 krad was more effective. Radiation reduced decay of Kadota figs, but this reduction was overshadowed by a severe radiation injury to the fruits. Within several days after irradiation, the surface of these fruits became unacceptably dark brown and dried out. Incidence of this injury was as follows:

Radiation dose:	*Percent of fruits injured*
None	1
100 krad	12
200 krad	55
300 krad	76
400 krad	73

Kadota figs from both growing areas were injured by radiation, but the injury did not occur on irradiated Calimyrna or Mission figs. There was no apparent effect of radiation on flavor of any of the figs; even the Kadota figs that had surface browning retained a satisfactory flavor.

TABLE 20.—*Decay of strawberries as a function of radiation dose, variety, and storage temperature and time*[1]

Variety and conditions simulated	0 krad	100 krad	200 krad	300 krad
SHASTA				
	Percent	*Percent*	*Percent*	*Percent*
Air shipment—2 days at 59°	21 a	7 a	10 a	7 a
Plus 1 day at 59° (retail)	47 a	23 b	12 b	6 b
Rail shipment—5 days at 37°	14 a	4 a	7 a	6 a
Plus 1 day at 59° (retail)	21 a	8 a	11 a	10 a
Storage—12 days at 37°	63 a	33 b	17 b	13 b
Plus 1 day at 59° (retail)	82 a	47 b	16 c	11 c
Average	41 a	20 b	12 bc	9 c
Z5A				
Air shipment—2 days at 59°	9 a	7 a	5 a	3 a
Plus 1 day at 59° (retail)	36 a	18 b	8 b	4 b
Rail shipment—5 days at 37°	7 a	4 a	4 a	3 a
Plus 1 day at 59° (retail)	13 a	8 a	5 a	7 a
Storage—12 days at 37°	37 a	16 b	7 b	6 b
Plus 1 day at 59° (retail)	72 a	36 b	11 c	5 c
Average	29 a	17 b	7 c	5 c

[1] Any 2 means on a given line not followed by the same letter are significantly different from each other at the 1-percent level.

TABLE 21.—*Decay of fresh figs as a function of radiation dose, variety, and storage temperature and time*[1]

Variety and storage	0 krad	100 krad	200 krad	300 krad	400 krad
CALIMYRNA					
59° F.:	*Percent*	*Percent*	*Percent*	*Percent*	*Percent*
3 days	0	5	0	0	0
5 days	82	73	50	23	14
7 days	95	100	95	45	59
38° F. for 8 days	68	50	23	5	0
Plus—					
2 days at 59°	100	100	95	55	55
4 days at 59°	100	100	100	100	91
70° F.:					
3 days	100	93	60	13	53
5 days	93	93	87	73	60
38° F. for 11 days	47	27	7	0	0
Plus 3 days at 70°	93	100	87	93	67
MISSION					
70° F.:					
3 days	86	75	46	0	7
5 days	89	100	93	89	86
38° F. for 11 days	82	57	21	4	4
Plus 3 days at 70°	100	100	89	89	100
KADOTA					
59° F.:					
2 days	19	6	9	0	0
4 days	48	48	38	6	6
38° F. for 6 days, plus—					
2 days at 59°	42	56	10	6	2
4 days at 59°	90	85	83	83	27

[1] Means on a given line that are underlined once are significantly different from the check (0 krad) at the 1-percent level by chi-square analysis; means underlined twice are significantly different at the 0.1-percent level.

In an attempt to avoid or reduce the surface browning of Kadota figs, some fruits were irradiated in low-oxygen atmospheres. These fruits were separated into 2 maturity classes, according to a green or a yellow color, and 24-fruit samples were placed in polyethylene bags, half of which were flushed with nitrogen before irradiation. The fruits were exposed to 0, 200, or 400 krad, following which all of the polyethylene bags were vented. The figs were held 4 days at 32° F. and 1 day at 59° before examination.

Irradiation in a low-oxygen atmosphere did not affect surface browning, and had little effect on decay (table 22). Surface browning was not related to maturity. The test was not definitive, as the figs were of poor quality and atmospheric compositions were not strictly controlled. Nevertheless, the results discouraged further attempts to avoid injury by irradiation in low-O_2 atmospheres.

Grapes

Botrytis rot is a serious problem during the storage and marketing of grapes. Radiation was tested as a control agent on the Thompson and Emperor varieties.

Thompson grapes were harvested on the day after a rain, and were irradiated the following day Duplicate samples of 4 to 5 kilograms each were put in vented polyethylene bags, irradiated with 0, 100, 200, or 300 krad, and stored at 32° F. for 5 weeks. One sample from each dose level was examined upon removal from storage, and the other sample was held at 70° for 1 day before examination. The percentage of grapes that were decayed was determined, and the firmness of 20 sound grapes from each sample was measured with a Magness-Taylor pressure tester, using a $\frac{5}{16}$-inch plunger.

TABLE 22.—*Surface browning and decay of Kadota figs as a function of radiation dose, maturity, and atmosphere during irradiation* [1]

Maturity and atmosphere	Surface browning			Decay		
	0 krad	200 krad	400 krad	0 krad	200 krad	400 krad
Green:	*Percent*	*Percent*	*Percent*	*Percent*	*Percent*	*Percent*
Low oxygen	0	9	63	67	50	33
Air	0	9	42	71	46	29
Yellow:						
Low oxygen	0	13	54	67	67	50
Air	0	9	58	79	54	42

[1] Means on a given line that are underlined once are significantly different from the 0 krad at the 1-percent level by chi-square analysis; means underlined twice are significantly different at the 0.1-percent level.

TABLE 23.—*Firmness and decay of Thompson grapes as a function of radiation dose and holding time at 70° F.*[1]

Criteria and holding time	0 krad	100 krad	200 krad	300 krad
Firmness: Held 1 day—pounds	3. 1 a	2. 3 a	2. 0 a	2. 0 a
Decay:				
No holding—percent	71 a	73 a	59 b	42 b
Held 1 day—do	83 a	86 a	72 b	73 b

[1] Any 2 means on a given line not followed by the same letter are significantly different from each other at the 1-percent level.

Although radiation reduced occurrence of decay (table 23), all of the samples were too badly decayed to be of any value. In addition, the irradiated grapes, regardless of dose, were objectionably soft.

It is difficult to treat prepackaged Emperor grapes with sufficient sulfur dioxide gas (SO_2) to control decay. Radiation was compared with SO_2 as a decay-control agent during a shipping test. The grapes were packed in 1¾-pound boxes; 16 boxes of these were irradiated with 0, 200, or 300 krad, and 16 boxes were fumigated with 1 percent SO_2 for 20 minutes. The grapes were shipped at 35° to 40° F. by rail from Firebaugh, Calif., to Chicago, the shipment requiring 5 days. Upon arrival the grapes were held at 70° for 0, 2, 4, or 6 days before examination. Four boxes from each treatment were inspected at each examination; decay was recorded, and 20 grapes from each treatment were tested with a Magness-Taylor pressure tester.

Irradiation of the grapes was no more effective than SO_2 as a decay-control agent, although both treatments reduced decay in comparison with the untreated controls (table 24). However, decay in the check and SO_2-treated samples was caused principally by *Botrytis*, while decay in the irradiated samples was due principally to *Cladosporium* spp. with very little *Botrytis* present. Irradiated grapes were softer than nonirradiated or SO_2-treated grapes (table 24), and it was observed that radiation caused a darkening of the stems. Radiation was less satisfactory than the standard SO_2 fumigation for control of decay of prepackaged grapes.

Oranges

The effect of radiation on decay of oranges caused by *Penicillium* spp. was studied in two rail shipping tests using noninoculated Washington navel oranges and in two holding tests using inoculated oranges.

The oranges were shipped from Visalia, Calif., to Chicago, Ill., and from Sanger, Calif., to New York, N.Y. Commercially graded, waxed, and packed fruits were repacked into vented polyethylene bags, 20 fruits per sample, and were irradiated with 0, 50, 100, 150 krad. Eight cartons were shipped in each test, and each carton contained 1 sample from each dose level. Temperatures ranged from 35° to 40° F. during the 5-day trip to Chicago and the 8-day trip to New York. After arrival, the oranges were held at 70° to 75° for 6, 8, 10, or 13 days in Chicago and for 0, 3, 7, or 14 days in New York before examination. Two of the eight cartons were inspected at each examination.

TABLE 24.—*Firmness and decay of prepackaged Emperor grapes as a function of radiation dose and holding time* [1]

Treatment	Firmness (mean of all examinations)	Decay after the indicated number of days at 70° F.			
		0 days	2 days	4 days	6 days
	Pounds	*Percent*	*Percent*	*Percent*	*Percent*
None (control)	1.1 a	0 a	6 a	20 a	49 a
SO_2	1.3 a	0 a	2 a	3 a	7 b
Radiation:					
200 krad	.7 b	0 a	4 a	8 a	16 b
300 krad	.7 b	0 a	1 a	8 a	9 b

[1] Any 2 means in a given column not followed by the same letter are significantly different from each other at the 1-percent level.

TABLE 25.—*Decay of Washington navel oranges shipped by rail from California to Chicago or New York as a function of radiation dose* [1]

Destination and transit and holding conditions	0 krad	50 krad	100 krad	150 krad
	Percent	*Percent*	*Percent*	*Percent*
Chicago: 5 days at 35°–40° F., 6–13 days at 70°–75° F	3	9	4	3
New York: 8 days at 35°–40° F., 0–14 days at 70°–75° F	2	1	3	3

[1] No difference between means is statistically significant at the 1-percent level.

Decay was slight in both tests, and in neither was it reduced by radiation (table 25). The decay that occurred was caused by *Penicillium* spp., and most of it developed after at least a week at 70°–75° F.

Pitting of the rind developed during the holding periods. This disorder apparently resulted from exposure of the fruits to extended periods of cool, moist weather before harvest. Fruits showing the pitting were sorted out before packing, but pits continued to appear after packing. Irradiation of the oranges stimulated development of the pits (table 26). Both the number of fruits affected and the average severity of the pitting increased following irradiation, and all radiation doses had the same effect. Pitting increased with time, but increased at a uniform rate among all the samples (appendix, table 39).

Exposure to 150 krad significantly increased the number of soft fruits in the lots shipped to New York. The percentages of oranges that were noticeably soft were as follows:

Radiation:	*Percent*
None	5
50 krad	8
100 krad	8
150 krad	13

However, bruising during shipment was not greater following irradiation. In the Chicago test, increased softening was not observed. Irradiated oranges shipped to New York, especially those exposed to 150 krad, had a poorer flavor than the nonirradiated fruits. Irradiation did not affect rind color.

TABLE 26.—*Incidence and average severity of rind pitting on Washington navel oranges, shipped by rail from California to Chicago and New York City, as a function of radiation dose* [1]

Criteria and destination	0 krad	50 krad	100 krad	150 krad
Incidence:				
Chicago—percent	3 a	45 b	43 b	43 b
New York City—do	30 a	65 b	70 b	73 b
Severity: [2]				
Chicago—rating	1.0 a	1.6 b	1.5 b	1.5 b
New York City—do	1.3 a	2.2 b	2.2 b	2.2 b

[1] Any 2 means on a given line not followed by the same letter are significantly different from each other at the 1-percent level.

[2] Rating scale: 1=slight; 2=moderate; 3=severe.

In the laboratory tests, oranges were inoculated with spores of *P. digitatum* harvested from colonies grown on potato-dextrose agar. Inoculation was achieved by cutting the peel of the fruits to a depth of 1 to 2 mm. with a circular saw whose blade passed through a suspension of about 500 million spores in 100 milliliters of water. Two longitudinal cuts were made on opposite sides of each orange. Samples of 20 fruits each were packed in vented polyethylene bags after inoculation.

In the first test, the oranges were held at 70° F. for 24 or 48 hours after inoculation, and then were irradiated with 0, 50, 100, 150, or 200 krad. They were subsequently held for 5 days at 37° plus 2 or 5 days at 65° before examination.

In the second test, one set of samples was irradiated immediately after inoculation, and a second set was inoculated, held 24 hours at 70° F., and then irradiated. Radiation doses were the same as above. Following irradiation, the fruits were held at 37° for 7 days plus 1, 2, and 3 days at 70°. All of the fruits were examined after each of these 70° holding periods. Included in this test was a set of samples that were not inoculated but which were wetted with tap water before irradiation.

A chi-square test of independence made on the decay data showed that the two inoculations made on each orange behaved independently. Therefore, each sample consisted of 40 observations on 20 fruits.

The time that elapsed between inoculation and irradiation had a striking influence on the effect of radiation (table 27). Irradiation immediately after inoculation greatly reduced decay; 100 krad retarded and 150 krad prevented its development. When irradiation was delayed for 24 hours after inoculation, 100 krad had no significant effect on decay, and 150 or 200 krad only retarded it. A delay of 48 hours was no more detrimental than one of 24 hours. Radiation was much more effective on spores than on established infections of *P. digitatum*.

Increased rind pitting followed irradiation in both inoculation tests. In the second test, after 3 days at 65° to 70° F., pitting on oranges that were irradiated while wet was compared with pitting on an inoculated lot of fruits that had been irradiated while dry. Although the inoculated fruits in the 0- and 50-krad samples were completely decayed by this time, the remaining fruits showed that irradiation of oranges while wet affected neither the incidence nor severity of the pitting (table 28).

TABLE 27.—*Decay of Washington navel oranges as a function of radiation dose, storage temperature and time, and time between* Penicillium digitatum *inoculation and irradiation* [1]

Time when irradiated and length of storage at 37° F. and of holding at 65° to 70°	0 krad	50 krad	100 krad	150 krad	200 krad
IRRADIATED IMMEDIATELY AFTER INOCULATION					
Stored 7 days and—	*Percent*	*Percent*	*Percent*	*Percent*	*Percent*
Held 1 day	98	70	0	0	5
Held 2 days	100	98	8	0	8
Held 3 days	100	98	43	0	8
IRRADIATED 24 HOURS AFTER INOCULATION					
Stored 5 days and—					
Held 2 days	100	93	78	40	8
Held 5 days	100	98	98	93	68
Stored 7 days and—					
Held 1 day	100	95	98	40	45
Held 2 days	100	100	100	85	68
Held 3 days	100	100	100	100	90
IRRADIATED 48 HOURS AFTER INOCULATION					
Stored 5 days and—					
Held 2 days	95	78	58	13	8
Held 5 days	98	100	98	95	68

[1] Means on a given line that are underlined once are significantly different from the control at the 1-percent level by chi-square analysis; means underlined twice are significantly different at the 0.1-percent level.

TABLE 28.—*Incidence and severity of rind pitting of Washington navel oranges as a function of radiation dose and presence of water on the fruits during irradiation*

Criteria and condition when irradiated	0 krad	50 krad	100 krad	150 krad	200 krad
Incidence:					
Dry----------percent--	-----	-----	50	65	70
Wet----------do----	15	40	65	80	65
Severity: [1]					
Dry----------rating--	-----	-----	1. 5	1. 6	1. 9
Wet----------do----	1. 7	1. 4	1. 3	1. 5	1. 9

[1] Rating scale: 1=slight; 2=moderate; 3=severe.

Apples

Yellow Newtown apples are susceptible to internal browning when stored at temperatures below 40° F. Since it has been reported (*6*) that radiation reduced "core flush," an internal browning disorder of McIntosh apples, an experiment was conducted to learn whether or not radiation would reduce internal browning of Yellow Newtown apples during storage.

Apples were packed in paper bags (20 fruits per sample); irradiated with 0, 75, 100, 125, and 150 krad; and stored at 32° or 41° F. in either ambient air or modified atmosphere. For modified atmosphere storage, the samples were sealed in polyethylene liners, one sample from each dose level per liner; the atmosphere in these liners stabilized at about 6 percent CO_2 and 13 percent O_2 at 32°, and at 4 percent CO_2 and 14 percent O_2 at 41°. The apples were stored for 3, 4½, or 6 months before examination. Also included in the test was one set of samples that were irradiated after wetting with tap water; these apples were stored in polyethylene bags for 4½ months at 41° before examination.

Radiation did not affect the occurrence of internal browning, core browning, or decay of the apples during storage (table 29). Internal browning occurred only at 32° F., was slightly worse in modified atmospheres than in air, and increased as storage time lengthened, but its occurrence was not affected by radiation (appendix, table 40). Core browning occurred at both 32° and 41°, but was much worse at 32°; it increased as storage time lengthened, and was slightly more severe in air than in modified atmospheres. Decay, which was caused primarily by *Botrytis* and *Penicillium* species, increased as storage time lengthened and was slightly more severe at 41° than at 32°.

The apples were only slightly softened by the irradiation process itself, but the irradiated fruits generally softened more rapidly during storage than the controls (table 30). Radiation-induced softening was quite severe in modified atmospheres, especially at 32° F. However, the softening was of much less consequence in apples stored in air; in fact, at 32° the irradiated fruits were firmer than the controls. These data for air storage undoubtedly were influenced by moisture loss as well as by softening, for radiation greatly increased shriveling of the apples in air storage (table 31). Although more fruits exhibited shriveling at 41° than at 32°, the severity of shriveling was much worse at 32° due to a lower humidity in this storage room than in the 41° room. The greater loss of moisture during storage in air following irradiation probably accounted for the significant interaction of radiation and storage atmosphere on firmness (appendix, table 40).

TABLE 29.—*Internal browning, core browning, and decay of Yellow Newtown apples during storage, as a function of radiation dose* [1]

Disorder	0 krad	75 krad	100 krad	125 krad	150 krad
Internal browning----------rating [2]--	3. 1	3. 2	3. 1	3. 2	3. 1
Core browning----------percent--	45	47	51	52	53
Incidence of decay----------do----	28	30	21	31	28
Severity of decay----------rating [3]--	1. 5	1. 3	1. 3	1. 3	1. 3

[1] No difference between means on a given line is statistically significant at the 5-percent level.
Decay and core browning occurred at both 32° and 41° F., while internal browning occurred at only 32°.

[2] Scale: 1=none; 2=trace; 3=slight; 4=moderate; 5=severe.

[3] Scale: 1=slight; 2=moderate; 3=severe.

TABLE 30.—*Firmness of Yellow Newtown apples as a function of radiation dose, storage atmosphere, temperature, and time* [1]

Storage atmosphere, temperature, and time	0 krad	75 krad	100 krad	125 krad	150 krad
	Pounds	*Pounds*	*Pounds*	*Pounds*	*Pounds*
No storage	20	20	20	19	19
Air storage at—					
32° F.:					
3 months	15 a	16 a	17 a	16 a	16 a
4.5 months	13 a	15 a	15 a	15 a	15 a
6 months	13 a	15 a	16 a	15 a	15 a
Average	14 a	15 b	16 b	15 b	15 b
41° F.:					
3 months	13 a	13 a	12 a	13 a	13 a
4.5 months	13 a	13 a	12 a	12 a	12 a
6 months	14 a	13 a	13 a	12 a	12 a
Average	13 a	13 a	12 b	12 b	12 b
Modified atmosphere storage at [2]—					
32° F.:					
3 months	18 a	17 a	16 a	15 a	16 a
4.5 months	17 a	15 ab	14 ab	13 ab	13 b
6 months	19 a	15 b	14 bc	12 bc	11 c
Average	18 a	16 b	15 c	14 d	13 d
41° F.:					
3 months	16 a	16 a	14 a	14 a	14 a
4.5 months	14 a	13 a	13 a	13 a	12 a
6 months	15 a	15 a	15 a	14 a	13 a
Average	15 a	15 a	14 b	14 b	13 b

[1] Magness-Taylor pressure tester with 7/16-inch plunger. Any 2 means on a given line not followed by the same letter are significantly different from each other at the 1-percent level.

[2] Atmospheres in the sealed liners stabilized at about 6 percent CO_2 and 13 percent O_2 at 32° F., and at 4 percent CO_2 and 14 percent O_2 at 41°.

TABLE 31.—*Shriveling of Yellow Newtown apples as a function of radiation dose and storage temperature* [1]

Storage temperature	0 krad	75 krad	100 krad	125 krad	150 krad
	Percent	*Percent*	*Percent*	*Percent*	*Percent*
32° F.	8 a	28 ab	43 b	48 b	53 b
41° F.	35 a	53 ab	78 b	70 b	78 b

[1] Any 2 means on a line not followed by the same letter are significantly different from each other at the 1-percent level.

The irradiated fruits seemed sweeter than the controls, but they lacked the characteristic varietal flavor which developed in the controls.

Apples irradiated while wet responded the same as those irradiated while dry.

Avocados

In tests with Fuerte avocados, samples of 36 fruits were irradiated and held for 5 days at 45° F. before ripening at 70° for 2, 4, 6, or 8 days. Doses of 0, 50, 100, 150, and 200 krad were used in one test, and 0, 10, 20, 30, and 40 krad in a second test. Nine fruits were examined after each ripening period, and the firmness of the flesh was tested with a Magness-Taylor pressure tester, using a 5/16-inch plunger.

In the first test, all radiation doses reduced the rate of fruit softening (table 32). During the

TABLE 32.—*Firmness of Fuerte avocados, as a function of radiation dose and ripening time at 70° F.* [1]

Ripening time	0 krad	50 krad	100 krad	150 krad	200 krad
Test 1:	*Pounds*	*Pounds*	*Pounds*	*Pounds*	*Pounds*
2 days	13 a	23 ab	25 b	24 ab	20 ab
4 days	10 a	12 a	18 a	14 a	15 a
6 days	5 a	13 ab	14 ab	18 b	15 ab
8 days	3 a	7 ab	7 ab	17 b	17 b
Average	8 a	14 b	16 b	18 b	17 b
	0 krad	10 krad	20 krad	30 krad	40 krad
Test 2:					
2 days	16 ab	9 a	17 ab	21 b	15 ab
4 days	14 a	3 b	7 ab	7 ab	9 ab
6 days	5 a	4 a	5 a	10 a	9 a
8 days	3 a	3 a	4 a	5 a	4 a
Average	10 a	5 b	8 ab	11 a	9 a

[1] Any 2 means on a given line not followed by the same letter are significantly different from each other at the 1-percent level.

8-day ripening period, fruits exposed to 150 or 200 krad softened slightly, those exposed to 50 to 100 krad softened moderately, and those not irradiated softened to a buttery consistency. However, at each examination all of the irradiated avocados showed severe internal discoloration. The vascular strands were brown and the flesh was gray, and the discolorations rapidly worsened after the fruits were cut. In addition, the skin of the irradiated fruits became black during the ripening period; this was noticeable following 50 krad and was severe following 100 to 200 krad.

In the second test, lower doses were used to learn whether or not they would retard softening without causing discoloration. Doses of 10 to 40 krad did not retard softening (table 32). In fact, avocados exposed to 10 krad softened more rapidly than the controls. Furthermore, all doses caused browning of the vascular strands in the fruits. Flesh discoloration was severe following 20 to 40 krad, but not after 10 krad. Slight darkening of the skin resulted from 20 to 40 krad.

These results are very similiar to unpublished data of Beraha (personal correspondendence) [5] for irradiation of Walden, Booth 8, and Lulu avocados from Florida.

Olives

Decay is sometimes a problem during cross-country shipment of fresh green olives. Duplicate samples (3.5 kilograms per sample) of Large and Jumbo Barouni olives were exposed to 0, 100, 200, 300, or 400 krad. Following irradiation, 20 Jumbo-sized fruits from each dose level were tested with a Magness-Taylor pressure tester, using a 5/16-inch plunger; the remainders of the samples were stored at 50° F. for 2 or 4 weeks before examination.

Olives were softened by radiation and were made more susceptible to decay during storage (table 33). Decay was caused primarily by *Cladosporium* and *Aspergillus* species following 200 or 300 krad, and almost entirely by *Cladosporium* following 400 krad.

Radiation caused external and internal discoloration of the fruits. All doses caused external yellowing, and 200 or 300 krad stimulated reddening both externally and internally, especially of the Jumbos. Following 400 krad, the skin of the olives became brown. Internal discoloration was moderate following 200 krad and severe following 300 or 400 krad, and it was worse in the Jumbo than in the Large olives.

TABLE 33.—*Firmness and decay of Barouni olives as a function of radiation dose and storage time* [1]

Criteria and storage time at 50° F.	0 krad	100 krad	200 krad	300 krad	400 krad
Firmness; no storage pounds	17	15	14	12	12
Decay:					
2 weeks' storage percent	1	2	8	30	23
4 weeks' storage do	7	8	23	54	92

[1] Means on a given line that are underlined are significantly different from the control at the 0.1-percent level by chi-square analysis.

[5] L. Beraha, Market Quality Research Division, Agricultural Research Service, Chicago, Ill.

DISCUSSION

Of the 11 kinds of fruits that were irradiated, only strawberries and Mission and Calimyrna figs gained significant extension of market life without impairment of quality of the fruits as a result of irradiation. The shelf life of these fruits was extended by several days through reduction of decay. Low populations of the brown rot organism on peaches and nectarines were controlled by radiation, but even low doses caused some softening of the fruits. Higher populations of brown rot organism require higher doses for control (*12*), and it remains to be determined how much control can be provided without seriously injuring the fruits. Radiation reduced decay of grapes, but the reduction was no more than that obtained by standard control methods and it was accompanied by a marked softening and change in texture of the fruits.

Radiation increased the susceptibility of some fruits to certain decay organisms. *Cladosporium* was much more prevalent on irradiated than on nonirradiated grapes and strawberries. Rhizopus rot on Cardinal peaches was increased by radiation, apparently resulting from radiation injury to the skin of the fruits. Irradiation of olives resulted in greatly increased decay by *Cladosporium* and *Aspergillus* species. Similar results have been noted by others (*10, 14*), and have been attributed at least in part to increased permeability of tissues following irradiation (*11*).

Ripening of Bartlett pears was inhibited by radiation, and this inhibition could be used to extend the shelf life of the fruits by several days. However, inhibition by doses of 100 and 200 krad rapidly diminished during storage of the fruits at 32° F., and even these doses resulted in

blotchy ripening, mealy texture, and poor flavor.

Perhaps the most damaging effect of radiation on fruits is the failure of the fruits to develop their characteristic flavor during ripening. An actual loss of flavor following irradiation of ripe fruits was noticed only with oranges. However, radiation prevented normal flavor development during subsequent ripening of peaches, nectarines, plums, pears, and apples. Radiation did not reduce sweetness; in fact, irradiated apples were noticeably sweeter than the controls, and irradiated Santa Rosa, Eldorado, and Laroda plums contained a higher soluble solids concentration than the controls. What was missing was the subtle, characteristic flavor for which fresh fruits are prized. Any use of radiation must be restricted to doses that will not impair the flavor of the fruits.

During these tests, irradiated fruits frequently were found to be softer than the controls. Many fruits soften during the irradiation process (*2, 16*). In our tests, peaches, pears, apples, and olives were sampled shortly after irradiation; of these, only apples were not markedly softened during treatment. Such softening could increase bruising of some fruits during transit and marketing. Although radiation did not increase bruising of grapes or oranges in the shipping tests reported here, these fruits are not very bruise-susceptible. Radiation also influenced the rate of softening during the holding periods. Irradiated plums and apples softened more rapidly than the controls during storage and ripening. However, irradiated Late Le Grand nectarines and Bartlett pears softened more slowly than the controls during ripening. The effect of radiation on softening of avocados depended on the dose applied—10 krad increased softening, 20 to 40 krad had no effect, and 50 to 200 krad reduced the rate of softening. There was, therefore, no consistent pattern to the softening effect of radiation on fruits.

The effect of radiation on color development during ripening was also variable. The red blush of peaches and nectarines was enhanced by radiation, and formation of red color on and in olives was stimulated. Development of blue color on Laroda and Eldorado plums was inhibited by radiation, and on Santa Rosa plums it was prevented. The change of ground color from green to yellow occurred more quickly following irradiation of peaches, nectarines, and olives, but occurred more slowly following irradiation of pears.

The diversity of the responses suggests that they were influenced by many factors. One source of variation was inherent varietal differences. Individual varieties of peaches and figs responded quite differently, but variety was not a differentiating factor in tests with nectarines, plums, strawberries, and grapes. Another source of variation was the condition of the fruits when irradiated. Moisture on the fruits during irradiation caused spotting of the skin of peaches but did not affect oranges or apples. Radiation intensified a spotting disorder on oranges that had begun in the field. Pears (*8*) and tomatoes (*7*) of widely different maturities have been shown to respond differently to radiation. In our tests, however, peaches, nectarines, plums, and figs were separated into the different maturities included in commercial harvests, and the effects of radiation were the same within this range of maturities.

The stage of growth of the pathogens on the fruits also affected the radiation response; spores of *Penicillium* on oranges were controlled, but established infections of the same organism were not.

The material in which fruits were packed also altered results. Packaging fruits in polyethylene rather than paper bags reduced moisture loss, which often was greater following irradiation, and thus also affected shriveling, firmness, and sugar concentration.

Irradiation of fresh fruit does not appear to have broad commercial applications. The only crop that has consistently responded well to radiation is strawberries. The promising results with figs are tempered by the small size of the fresh fig industry. Use of radiation to control brown rot of stone fruits needs further evaluation under a wide range of environmental conditions. Under certain conditions other fruits might benefit from radiation, but potential injury to the fruits will impose severe restrictions on radiation usage.

LITERATURE CITED

(1) Beraha, L., Smith, M. A., and Wright, W. R.
1960. gamma radiation dose response of some decay pathogens. Phytopathology 50: 474–476.

(2) Boyle, F. P., Kertesz, Z. I., Glegg, R. E., and Connor, M. A., Jr.
1957. effects of ionizing radiations on plant tissues. II. softening of different varieties of apples and carrots by gamma rays. Food Res. 22: 89–95, illus.

(3) Bramlage, W. J., and Lipton, W. J.
1965. gamma radiation of vegetables to extend market life. U.S. Dept. Agr., Mktg. Res. Rpt. 703, illus.

(4) Hannan, R. S.
1955. scientific and technological problems involved in using ionizing radiations for the preservation of food. Dept. Sci. and Ind. Res. Food Invest. Spec. Rpt. 61. 192 pp., illus. Her Majesty's Stationery Office, London.

(5) Maxwell, A. E.
1961. analysing qualitative data. 163 pp. New York.

(6) Phillips, W. R., MacQueen, K. F., and Poapst, P. A.
1959. the effect of irradiation on the development of storage disorders of apples. 10th Internat. Cong. Refrig. Proc. 3: 176–180, illus.

(7) Salunkhe, D. K., Gerber, R. K., and Pollard, L. H.
1959. physiological and chemical effects of gamma radiation on certain fruits, vegetables, and their products. Amer. Soc. Hort. Sci. Proc 74: 423–429, illus.

(8) ———, Pollard, L. H., and Gerber, R. K.
1959. effects of gamma radiation dose, rate, and temperature on the taste preference and storage life of certain fruits, vegetables, and their products. Amer. Soc. Hort. Sci. Proc. 74: 414–422, illus.

(9) Shea, K. G.
1963. aec program on low-dose irradiation processing of food. Isotopes and Radiation Technol. 1(2): 181–188, illus.

(10) Skou, J. P.
1960. microbiological studies in connection with irradiation of carrots. Risö Rpt. 16: 17–83, illus.

(11) ———
1963. changes in the permeability of carrot tissues due to γ-irradiation and other physical and chemical treatments. Physiol. Plant. 16: 423–441, illus.

(12) Sommer, N. F., Maxie, E. C., and Fortlage, R. J.
1964. quantitative-dose response of *Prunus* fruit decay fungi to gamma irradiation. Radiation Bot. 4: 309–316, illus.

(13) ———, Maxie, E. C., Fortlage, R. J., and Eckert, J. W.
1964. sensitivity of *citrus* fruit decay fungi to gamma irradiation. Radiation Bot. 4: 317–322, illus.

(14) Truelsen, T. A.
1963. radiation pasteurization of fresh fruits and vegetables. Food Technol. 17: 100–103, illus.

(15) United States Army Quartermaster Research and Engineering Command.
1961. preservation of food by low-dose ionizing energy. U.S. Dept. Com., Off. Tech. Serv., 161 pp. illus. Washington.

(16) United States Atomic Energy Commission, Division of Isotopes Development.
1963. radiation technology in conjunction with postharvest procedures as a means of extending the shelf life of fruits and vegetables. U.S. Dept. Com., Off. Tech. Serv., Annual Report, Contract No. AT(11–1)–34, 168 pp., illus. Washington.

(17) ———, Office of Isotopes Development.
1961. radiation preservation of selected fruits and vegetables. an analysis of r & d programing and marketing factors. U.S. Dept. Com., Off. Tech. Serv., 227 pp., illus. Washington.

APPENDIX

TABLE 34.—*Peaches: Statistical significance of the effects of radiation, fruit maturity, packaging material, storage time and temperature, and of certain interactions of these factors on 5 quality criteria* [1]

Criteria and variety	Radiation (R)	Maturity (M)	Packaging (P)	Storage (S)	R x M	R x P	R x S
DECAY							
Cardinal	(**)	(**)	----------	n.s.	n.s.	----------	----------
Elberta	(**)	n.s.	n.s.	n.s.	(**)	n.s.	n.s.
Halloween	(**)	(*)	n.s.	n.s.	n.s.	n.s.	n.s.
WEIGHT LOSS							
Redglobe	(**)	n.s.	----------	(**)	n.s.	----------	(*)
Suncrest	n.s.	n.s.	(**)	(**)	n.s.	n.s.	n.s.
Elberta	(**)	n.s.	(**)	n.s.	n.s.	(*)	(*)
Halloween	(*)	n.s.	(**)	(*)	n.s.	n.s.	n.s.
FIRMNESS							
Cardinal	(*)	n.s.	----------	(*)	n.s.	----------	n.s.
Redglobe	(**)	(**)	----------	(**)	n.s.	----------	n.s.
Suncrest	n.s.	(**)	n.s.	(**)	n.s.	n.s.	n.s.
Elberta	(**)	n.s.	(**)	n.s.	n.s.	(*)	(*)
Halloween	(*)	n.s.	(**)	(*)	n.s.	n.s.	n.s.
GROUND COLOR							
Redglobe	(**)	(**)	----------	(**)	n.s.	----------	(**)
Elberta	n.s.	(**)	n.s.	(**)	n.s.	n.s.	n.s.
Halloween	(**)	(**)	(**)	n.s.	n.s.	n.s.	(*)
RED COLOR							
Redglobe	(**)	(**)	----------	n.s.	n.s.	----------	n.s.
Elberta	n.s.	(**)	n.s.	(**)	n.s.	n.s.	n.s.
Halloween	(**)	(**)	(**)	n.s.	n.s.	n.s.	(*)

[1] The level of statistical significance is denoted as follows:
n.s. = no significance.
* = significance at the 5-percent level.
** = significance at the 1-percent level.

TABLE 35.—*Nectarines: Statistical significance of the effects of radiation, waxing, fruit maturity, storage time and temperature, and certain interactions of these factors on specified quality criteria* [1]

Variety and criteria	Radiation (R)	Waxing (W)	Maturity (M)	Storage (S)	R x W	R x M	R x S
LATE LE GRAND							
Weight loss	(*)	(**)	----------	(**)	n.s.	----------	n.s.
Firmness	(**)	(**)	----------	(**)	n.s.	----------	(*)
Red color	n.s.	(**)	----------	n.s.	(*)	----------	n.s.
Ground color	(**)	(**)	----------	(**)	n.s.	----------	n.s.
Decay	(**)	----------	----------	(*)	----------	----------	n.s.
SUN GRAND							
Weight loss	(*)	----------	(*)	(**)	----------	n.s.	n.s.
Firmness	n.s.	----------	(**)	(**)	----------	n.s.	n.s.

[1] The level of statistical significance is denoted as follows:
n.s. = no significance.
* = significance at the 5-percent level.
** = significance at the 1-percent level.

TABLE 36.—*Plums: Statistical significance of the effects of radiation, initial color, specific gravity, storage time and temperature, and certain interactions of these factors on 4 quality criteria* [1]

Criteria and variety	Radiation (R)	Initial color (C)	Specific gravity (G)	Storage at 34° F. (S)	Ripening at 59° F. (T)	R x C	R x G	R x S	R x T
FIRMNESS									
Santa Rosa, Test 1	(**)	(**)			(**)	n.s.			n.s.
Santa Rosa, Test 2	(**)		(**)	(**)	(**)		n.s.	(*)	n.s.
Santa Rosa, Test 3	(**)	n.s.	(*)		(**)	n.s.	n.s.		n.s.
Eldorado	(**)		n.s.	(*)	(**)		n.s.	(**)	n.s.
Wickson	(*)	(*)		n.s.	(**)	n.s.		n.s.	n.s.
Laroda	(**)	(**)	(**)	(**)	(**)	n.s.	n.s.	(**)	(**)
SOLUBLE SOLIDS									
Santa Rosa, Test 1	(**)	(**)			(*)	n.s.			n.s.
Santa Rosa, Test 2	(*)		(**)	(**)	(**)		n.s.	n.s.	n.s.
Santa Rosa, Test 3	n.s.	(**)	(**)		(**)	n.s.	n.s.		(**)
Eldorado	(**)		(**)	n.s.	(**)		n.s.	n.s.	n.s.
Wickson	n.s.	n.s.		(**)	n.s.	n.s.		n.s.	n.s.
Laroda	(*)	(**)	(*)	(*)	n.s.	n.s.	n.s.	(*)	(**)
COLOR									
Santa Rosa, Test 2	(**)		(**)	n.s.	(**)		n.s.	n.s.	n.s.
Eldorado	(**)		n.s.	(**)	(**)		n.s.	(**)	(**)
Laroda	(**)	(**)	(**)	n.s.	(**)	n.s.	n.s.	n.s.	(**)
INTERNAL BREAKDOWN [2]									
Santa Rosa, Test 2	(***)			[3]	(***)			(***)	(***)
Eldorado	(***)			(***)	(***)			(***)	(**)
Wickson	(***)			(***)	(***)			(***)	n.s.
Laroda	(***)	(***)	(***)	[4]		(*)	n.s.		

[1] The level of statistical significance is denoted as follows:
n.s.=no significance.
*=significance at the 5-percent level.
**=significance at the 1-percent level.
***=significance at the 0.1-percent level.

[2] These data were analyzed using the chi-square contingency table method.
[3] Breakdown occurred only after 4 and 6 weeks of storage.
[4] Breakdown was found only at the final examination.

TABLE 37.—*Pears: Analyses of variance of color and firmness*

Source	Degrees of freedom	Color		Firmness	
		Mean square	Significance [1]	Mean square	Significance [1]
Total	89				
Radiation	4	4.97	(**)	76.06	(**)
Ethylene	1	.32	(**)	1.06	n.s.
Storage at 32° F	2	2.80	(**)	4.39	(**)
Ripening at 59° F	2	6.56	(**)	73.34	(**)
Radiation x Ethylene	4	.03	n.s.	.81	n.s.
Radiation x Storage	8	.11	(**)	3.63	(**)
Radiation x Ripening	8	.15	(**)	4.20	(**)
Storage x Ethylene	2	.04	n.s.	.38	n.s.
Storage x Ripening	4	.71	(**)	9.53	(**)
Ethylene x Ripening	2	.11	(*)	2.82	(**)
Error	52	.03		.41	

[1] The level of statistical significance is denoted as follows:
n.s.=no significance.
*=significance at the 5-percent level.
**=significance at the 1-percent level.

TABLE 38.—*Strawberries: Analysis of variance of decay*

Source	Degrees of freedom	Mean square	Significance [1]
Total	215		
Replications	2	2,105.2	(**)
Treatments	71	894.1	(**)
Radiation	3	7,852.3	(**)
Variety	2	1,194.1	(**)
Shasta vs Z5A	1	2,310.8	(**)
Z5A from different areas	1	77.4	n.s.
Simulated transit	2	7,689.6	(**)
Simulated retail period	1	3,271.3	(**)
Radiation x transit	6	2,044.2	(**)
Radiation x retail period	3	646.3	(**)
Other interactions	54	109.7	n.s.
Error	142	132.7	

[1] The level of statistical significance is denoted as follows:
n.s.=no significance.
**=significance at the 1-percent level.

TABLE 39.—*Washington navel oranges: Analyses of variance of the incidence and average severity of rind pitting*

Source	Degrees of freedom	Incidence		Severity	
		Mean square	Significance [1]	Mean square	Significance [1]
Total	31				
Radiation (R)	3	491.9	(**)	1.03	(**)
Examinations (E)	3	61.1	(**)	.14	(*)
Destination	1	820.1	(*)	2.69	(**)
R x E	9	8.2	n.s.	.04	n.s.
Error	15	9.8		.04	

[1] The level of statistical significance is denoted as follows:
n.s.=no significance.
*=significance at the 5-percent level.
**=significance at the 1-percent level.

TABLE 40.—*Yellow Newtown apples: Statistical significance of the effect of radiation, storage conditions, and certain interactions of these factors on 6 quality criteria* [1]

Criteria	Radiation (R)	Storage			R x S	R x T	R x A
		Time (S)	Temperature (T)	Atmosphere (A)			
Incidence of decay	n.s.	(**)	n.s.	n.s.	n.s.	n.s.	n.s.
Severity of decay	n.s.	(**)	(*)	n.s.	n.s.	n.s.	n.s.
Firmness	(**)	(**)	(**)	(*)	n.s.	n.s.	(**)
Internal browning	n.s.	(**)		(**)	n.s.		n.s.
Core browning	n.s.	(**)	(**)	(*)	n.s.	n.s.	n.s.
Shriveling	(**)	(**)	(**)				

[1] The level of statistical significance is denoted as follows:
n.s.=no significance.
*=significance at the 5-percent level.
**=significance at the 1-percent level.

U.S. GOVERNMENT PRINTING OFFICE: 1965 O—776-703

NATIONAL AGRICULTURAL LIBRARY
1022433020