AgEcon SEARCH
RESEARCH IN AGRICULTURAL & APPLIED ECONOMICS

The World's Largest Open Access Agricultural & Applied Economics Digital Library

This document is discoverable and free to researchers across the globe due to the work of AgEcon Search.

Help ensure our sustainability.

Give to AgEcon Search

AgEcon Search
http://ageconsearch.umn.edu
aesearch@umn.edu

*Papers downloaded from **AgEcon Search** may be used for non-commercial purposes and personal study only. No other use, including posting to another Internet site, is permitted without permission from the copyright owner (not AgEcon Search), or as allowed under the provisions of Fair Use, U.S. Copyright Act, Title 17 U.S.C.*

Ag84Ab

Cat/Sta

United States
Department of
Agriculture

c3

Economic
Research
Service

Agricultural
Economic
Report
Number 651

Food Cost Review, 1990

Denis Dunham

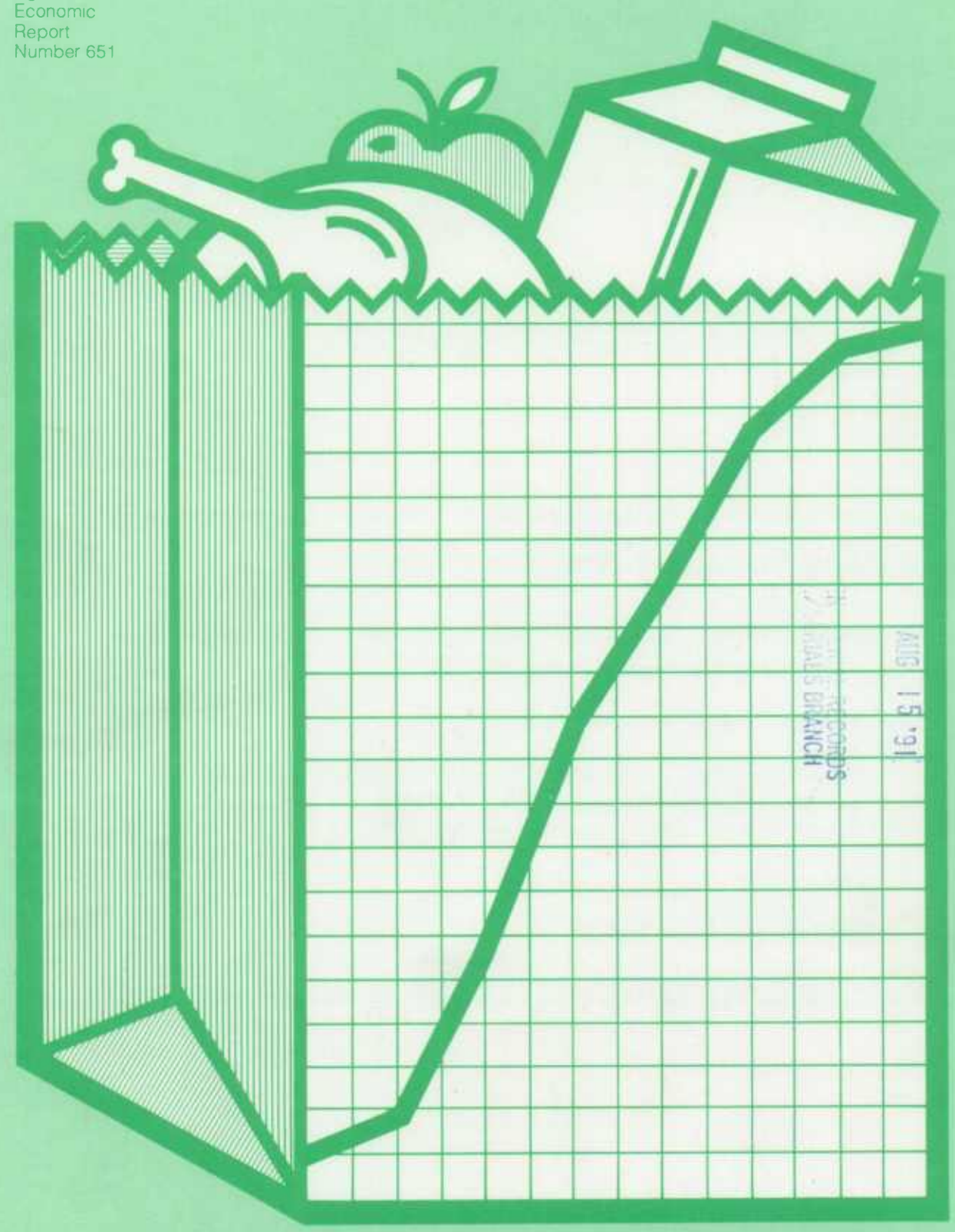

USDA
NAT'L AGRIC LIBRARY
RECEIVED
AUG 15 '91
RECORDS
BRANCH

It's Easy To Order Another Copy!

Just dial 1-800-999-6779. Toll free (in the United States and Canada). All other areas please dial 301-725-7937.

Ask for *Food Cost Review, 1990* (AER-651).

The cost is $8.00 per copy. For non-U.S. addresses (including Canada), add 25 percent. Charge your purchase to your VISA or MasterCard, or we can bill you. Or send a check or purchase order (made payable to ERS-NASS) to:

ERS-NASS
P.O. Box 1608
Rockville, MD 20849-1608.

We'll fill your order by first-class mail.

Food Cost Review, 1990. By Denis Dunham, Commodity Economics Division, Economic Research Service, U.S. Department of Agriculture. Agricultural Economic Report No. 651.

Abstract

Food prices, as measured by the Consumer Price Index (CPI), increased 5.8 percent in 1990, the same percentage increase as the year before. Higher farm prices and charges for processing and distribution both contributed to the price increase. The prices farmers received for commodities, as measured by the farm value of USDA's market basket of foods, also rose 5.8 percent. But the increase in farm value was smaller than the 7.1-percent rise in retail prices of these foods in 1990. (The 7.1-percent market basket increase excludes away-from-home meals and includes fewer commodities compared with the 5.8-percent CPI all-food index.) The farm value share of the food dollar spent in grocery stores in 1990 was 30 percent, unchanged from 1989. The farm-to-retail price spread of USDA's market basket of foods rose 7.7 percent, reflecting higher prices of inputs, such as labor and energy, that the food industry used.

Keywords: Retail food prices, farm-to-retail price spread, farm value share, food marketing costs, food spending, profit, productivity.

Acknowledgments

Lawrence Duewer, Joan Pearrow, and Ron Lord provided cost data for individual commodities, Howard Elitzak prepared the section on food spending and the marketing bill, and T.Q. Hutchinson provided transportation information. The author thanks Kyra Toland-Jordan for typing the report and Teri Thrash for editorial assistance.

Washington, DC 20005-4788 June 1991

Contents

	Page
Summary	iii
Introduction	1
Retail Food Prices	1
Consumer Price Index	4
Retail Prices of Food Groups	4
Food Consumption	8
Market Basket Prices	9
Farm Value	10
Farm Value Share of Food Dollar	13
Farm-to-Retail Price Spread	13
A Look Back at the Decade	18
Price Spreads for Selected Foods	20
Choice Beef	20
Pork	21
Broilers	22
Eggs	24
Fluid Milk	24
Fruit and Vegetables	24
Bread	27
Sugar	28
Food Industry Costs, Profits, and Productivity	29
Prices of Marketing Inputs	29
Financial Ratios	36
Labor Productivity	39
Food Spending: How It Was Distributed	40
Food Expenditures	40
Farm Value	41
Marketing Bill	43
What the Marketing Bill Bought	44
Food Spending in Relation to Income	49

Summary

Consumers paid 5.8-percent higher prices for food in 1990, as measured by the Consumer Price Index (CPI). This percentage increase equaled the 1989 price increase, which was the largest since 1981. Price gains in 1990 were largest in the first quarter, due in large part to a freeze that sharply reduced citrus and vegetable supplies and caused prices to sharply rise. Between the two major components of the food index, grocery store prices rose the most, advancing 6.5 percent, the same rise as in 1989. Restaurant meal prices went up 4.7 percent, fractionally more than a year earlier. The rise in food prices in 1990 reflected increases in food processing and distribution costs and higher farm prices for many commodities.

The farm value of USDA's market basket of foods, based on prices farmers received for commodities, rose 5.8 percent, largely reflecting higher prices for livestock and fresh fruit. However, the 1990 increase in the farm value of food was smaller than the year's 7.1-percent rise in retail prices of these foods. (The 7.1-percent market basket increase excludes away-from-home meals and includes fewer commodities compared with the 5.8-percent CPI all-food index.)

The 1990 farm value averaged 30 percent of the retail cost for a market basket of food purchased in grocery stores, the same share as in 1989. This stability contrasts with most other years of the 1980's, when abundant food supplies held down farm prices, while rising processing and distributing charges boosted retail prices. These opposing forces lowered the average farm share from 37 percent to 30 percent during the 1980's.

The farm-to-retail price spread rose 7.7 percent in 1990, partly reflecting higher prices of marketing inputs, including labor, packaging, and advertising, and larger industry profit margins. After-tax profits of food retailers averaged 1.2 percent of sales in 1990, 1.5 times greater than the previous year. In addition, there was probably greater use of some inputs per unit of output. For instance, hours worked in food retailing increased in the 1980's, reflecting more service departments in supermarkets, such as instore bakeries and delicatessens.

Consumers spent $441 billion for food produced on U.S. farms in 1990, about 5 percent more than in 1989. This amount includes purchases of farm foods in grocery stores, about 61 percent of the total, and at away-from-home eating places. About 24 percent of last year's food spending went back to farmers, who received about $107 billion for food commodities. This share is lower than the 30-percent farm value share for the market basket of foods because it includes the much lower 16-percent farm share for away-from-home food spending.

For food--	1989	1990
	Billion dollars	
Consumers spent...	419	441
Marketing bill was...	315	334
Farmers got...	104	107

The remaining $334 billion--the marketing bill--went to the food industry for handling, processing, and retailing foodstuffs after they left the farm. The marketing bill rose $19 billion in 1990. Direct labor costs for food marketing represented 46 percent of the marketing bill. Other principal costs were packaging and containers, transportation, advertising, and energy.

Although the dollar amount spent for food continues to rise, food spending as a percentage of disposable personal income declined over the past decade. In 1990, personal expenditures for food, as estimated by the Economic Research Service, were 11.8 percent of personal disposable income, down from 12.6 percent 5 years earlier and 13.8 percent in 1980.

Food Cost Review, 1990

Denis Dunham

Introduction

Consumers, farmers, and legislators want to know what causes food prices to change. They are also interested in the difference between what farmers get for the food they sell and how much consumers pay for that food, commonly referred to as the farm-to-retail price spread. To answer these concerns, Congress has directed the U.S. Department of Agriculture (USDA) to measure price spreads for food originating on farms.

This report presents USDA's findings for 1990, including answers to the following questions:

- How much did food prices rise in 1990? Why?
- How much of the retail food price does the farm value represent?
- How did farm-to-retail price spreads change last year, both for a market basket of food and for such food groups as meat and dairy products?
- How have recent developments affected food industry costs, profit margins, and productivity?
- Finally, how much did Americans spend for farm-produced food, and how were these dollars divided among costs of producing and marketing food?

Retail Food Prices

Retail food prices rose in 1990 by the same percentage as the year before, as measured by the Consumer Price Index (CPI). The CPI shows that retail food prices in 1990 averaged 5.8 percent above those in 1989. This increase equaled the 1989 price increase, which was the largest since 1981 (table 1). Price gains in 1990 were greatest early in the year, advancing by a nearly 14-percent annual rate in the first quarter. This striking increase stemmed in part from a December 1989 freeze in Florida and Texas that sharply reduced citrus and vegetable supplies. Price gains for meat and dairy foods were sharp, reflecting smaller per capita supplies of beef and pork. Dairy product prices advanced at a 22-percent annual rate in the first quarter as the farm-to-retail price spread--the gap between the farm value of milk and the retail value of products made from milk--widened substantially. Increases in the CPI abated over the remainder of the year, but prices throughout 1990 averaged above 1989 levels.

The two major components of the food index--food sold in grocery stores for use at home and meals and snacks consumed away from home--advanced by much different rates for 1990. Food prices in grocery

*The author is an agricultural economist in the Commodity Economics Division, Economic Research Service, U.S. Department of Agriculture.

Table 1--Consumer Price Indexes for food and percentage changes from previous years

Year	Food		Food at home		Food away from home	
	Index	Change	Index	Change	Index	Change
	1982-84=100	Percent	1982-84=100	Percent	1982-84=100	Percent
1972	42.1	4.2	42.7	4.4	41.0	4.1
1973	48.2	14.5	49.7	16.4	44.2	7.8
1974	55.1	14.3	57.1	14.9	49.8	12.7
1975	59.8	8.5	61.8	8.2	54.5	9.4
1976	61.6	3.0	63.1	2.1	58.2	6.8
1977	65.5	6.3	66.8	5.9	62.6	7.6
1978	72.0	9.9	73.8	10.5	68.3	9.1
1979	79.9	11.0	81.8	10.8	75.9	11.1
1980	86.8	8.6	88.4	8.1	83.4	9.9
1981	93.6	7.8	94.8	7.2	90.9	9.0
1982	97.4	4.1	98.1	3.5	95.8	5.4
1983	99.4	2.1	99.1	1.0	100.0	4.4
1984	103.2	3.8	102.8	3.7	104.2	4.2
1985	105.6	2.3	104.3	1.5	108.3	3.9
1986	109.0	3.2	107.3	2.9	112.5	3.9
1987	113.5	4.1	111.9	4.3	117.0	4.0
1988	118.2	4.1	116.6	4.2	121.8	4.1
1989	125.1	5.8	124.2	6.5	127.4	4.6
1990	132.4	5.8	132.3	6.5	133.4	4.7

Source: U.S. Department of Labor, Bureau of Labor Statistics.

stores climbed 6.5 percent in 1990, while prices for restaurant meals advanced by 4.7 percent. Last year was the fourth consecutive year in which the price rise was greater for the grocery food index. A greater sensitivity of grocery store food prices to changes in farm and wholesale commodity prices partly explains the greater increase in the grocery food index. Price gains for meat, dairy products, and fruit contributed most to the rise in food prices at grocery stores (table 2).

Farm prices for commodities and costs for processing and distributing food directly influence retail food prices, and both played a role in pushing food prices higher last year. Farm prices of commodities advanced an average of 5.8 percent. Higher livestock prices resulting from reduced production accounted for much of the increase in farm-level prices. Charges beyond the farmgate for processing and distributing food increased 7.7 percent. These marketing charges make up most of the retail price of foods. As a result, the rise in marketing charges increased food prices much more than higher farm prices last year, and nearly every other year in the decade. Consumer demand for food remained relatively strong through the first half of 1990, contributing to the rise in prices. However, a decline in personal real disposable income in the second half of the year likely dampened demand and price increases.

For the fourth year in the past five, food prices in 1990 rose more than the CPI for all other consumer products and services (figure 1). Inflation for all items less food averaged 5.3 percent in 1990, up from 4.6 percent in 1989. The acceleration in inflation was due primarily to a sharp price increase for motor fuels following the shutoff of petroleum exports from Iraq and Kuwait. Housing costs, the largest component of the CPI, increased 4.5 percent, prices of apparel and upkeep rose 4.6 percent, and medical care costs climbed 9 percent in 1990.

Table 2--Consumer Price Index changes for food eaten at home, by food group

Food group	1985	1986	1987	1988	1989	1990
		Percentage change from year earlier				
	1.5	2.9	4.3	4.2	6.5	6.5
Cereal and cereal products	3.9	3.0	3.2	7.6	9.2	5.5
Bakery products	3.8	2.7	3.5	5.9	8.0	5.9
Beef and veal	-2.1	.6	7.6	-3.0	6.4	8.0
Pork	.3	8.2	8.2	-3.0	.6	14.7
Other meat	.7	2.6	6.3	2.6	2.8	9.3
Poultry	-1.0	7.5	-1.4	7.2	9.9	-.2
Eggs	-16.6	6.8	-5.9	2.3	26.6	4.7
Fish and seafood	4.9	9.2	10.6	5.8	4.5	2.2
Dairy products	1.9	.1	2.5	2.4	6.6	9.4
Fresh fruit	10.1	2.1	11.2	8.3	6.6	12.1
Fresh vegetables	-4.3	4.1	12.9	6.3	10.7	5.6
Processed fruit	4.1	-2.9	4.0	10.3	3.2	8.7
Processed vegetables	1.1	-.2	2.8	4.8	10.7	2.7
Fats and oils	2.2	-2.2	1.5	4.6	7.2	4.2
Sugar and sweets	2.5	3.0	1.8	2.7	4.7	4.4
Nonalcoholic beverages	2.0	5.8	-2.6	0	3.5	2.0
Other prepared food	3.3	2.6	4.2	3.7	6.4	4.5

Source: U.S. Department of Labor, Bureau of Labor Statistics.

Figure 1

Consumer price indexes

Food lagged nonfood items in the first half of the 1980's, but after that it overtook nonfood items.

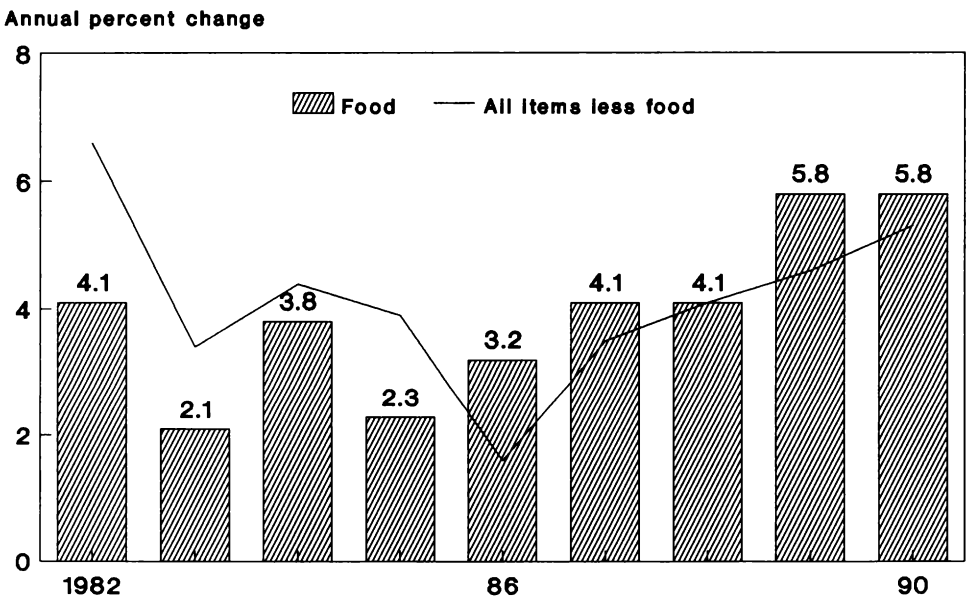

Consumer Price Index

The Consumer Price Index for urban consumers (CPI-U), published by the U.S. Department of Labor's Bureau of Labor Statistics (BLS), is the most widely accepted measure of changes in retail food prices. Prices used to develop the food CPI-U are collected in about 2,300 foodstores located in 85 urban areas.

After collecting the prices, the BLS summarizes them, weights them by their importance, and reports the prices as index numbers for about 70 food groups. The weights, reflecting the purchasing patterns of urban households, are periodically revised. The BLS made the latest revision in January 1987, for changes in purchasing patterns between 1972-73 and 1982-84.

The food component of the overall CPI-U has a weight of about 16 percent. Housing is the largest expenditure category, with 41 percent of the CPI-U weight, followed by transportation with 18 percent. The food category of the CPI-U has two major components: food purchased in foodstores for consumption at home, which has a weight of about 10 percent, and food consumed away from home, weighted at about 6 percent (table 3).

Knowing the importance of CPI-U components helps one understand how price changes for various food groups influence the overall change in the CPI-U for food. For instance, in the food-at-home CPI-U, meat is the largest major food category. Last year, the CPI-U for meat went up 10.1 percent, accounting for about 33 percent of the 6.5-percent increase in the food-at-home CPI-U.

Retail Prices of Food Groups

The three food groups of meat, dairy products, and fresh fruit accounted for half of the rise in grocery store prices in 1990: red meat retail prices rose 10.1 percent, dairy product prices went up 9.4 percent, and prices for fresh fruit advanced by 12.1 percent. Grocery store price increases for these three food groups in 1990 were much larger than those in 1989. However, grocery store price increases were more moderate for most other foods, particularly eggs, fresh vegetables, cereal and bakery products, and fats and oils (tables 2 and 4). The smaller price increases partly reflected a return to more normal crop production since the 1988 drought.

Meat

Beef and veal prices averaged 8 percent higher in 1990 than a year earlier. The price increase mainly reflected a 1.5-percent decline in beef production and record-high cattle prices. However, additional consumer nutrition information on beef, more closely trimmed beef products, and more convenient cuts of beef, such as boneless cuts, have likely enhanced consumer willingness to pay higher prices for beef. Cattle production typically occurs in cycles, lasting a period of years in which cattle herds both expand and liquidate. During an expansion phase of a cycle, which was underway in 1990, beef production is expected to decline, causing prices to increase. Reflecting the production decline, beef and veal consumption dropped to 68.5 pounds (retail weight) per capita in 1990, about 1.5 pounds less than in 1989.

Retail pork prices also climbed to a record-high level in 1990, as pork production fell about 3 percent. Hog production, which also has cycles, likely dropped to the cyclic low in 1990. Retail pork prices averaged 14.7 percent higher in 1990 than in 1989. With smaller production, pork consumption dropped to 49.5 pounds (retail weight) per capita in 1990, about 2 pounds less than in 1989.

Poultry and eggs

Retail poultry prices declined slightly in 1990 following a 9.9-percent gain in 1989. Prices reflected larger supplies of poultry, although high red meat prices and record broiler exports tempered the downward pressure on prices. Broiler chicken production increased about 7 percent in 1990, extending the long-term expansion of the 1980's, and turkey production was up about 9 percent. As a consequence, poultry consumption increased to 90 pounds (ready-to-cook weight) per capita in 1990, 4 pounds more than in 1989.

Table 3--Relative importance of food groups in Consumer Price Index for urban consumers (CPI-U), December 1990

Food group	Weight in CPI-U	Weight in food CPI-U	Weight in food-at-home CPI-U
		Percent	
All food	16.188	100.0	NA
Food at home	10.094	62.4	100.0
Cereal and bakery products	1.420	8.8	14.1
Cereal products	.459	2.8	4.6
Bakery products	.961	6.0	9.5
Meat	2.157	13.3	21.4
Beef and veal	1.092	6.7	10.8
Pork	.641	4.0	6.4
Other meats	.424	2.6	4.2
Poultry	.442	2.7	4.4
Fish and seafood	.377	2.3	3.7
Eggs	.192	1.2	1.9
Dairy products	1.258	7.8	12.4
Fresh milk and cream	.628	3.9	6.2
Processed dairy products	.630	3.9	6.2
Fresh fruit and vegetables	1.172	7.2	11.6
Fresh fruit	.638	3.9	6.3
Fresh vegetables	.534	3.3	5.3
Processed fruit and vegetables	.658	4.1	6.5
Processed fruit	.382	2.4	3.8
Processed vegetables	.276	1.7	2.7
Sugar and sweets	.343	2.1	3.4
Fats and oils	.271	1.7	2.7
Nonalcoholic beverages	.765	4.7	7.6
Other prepared food	1.039	6.4	10.3
Food away from home	6.094	37.6	NA

NA = Not applicable.
Source: U.S. Department of Labor, Bureau of Labor Statistics.

Table 4--Average retail food prices, selected items

Item	Unit	1986	1987	1988	1989	1990	Item	Unit	1986	1987	1988	1989	1990
		Dollars							Dollars				
Flour, white	Pound	0.21	0.20	0.21	0.24	0.25	Apples, red delicious	Pound	0.77	0.73	0.73	0.69	0.72
Rice, white, uncooked	do.	.45	.40	.48	.50	.50	Bananas	do.	.38	.36	.42	.45	.46
Spagetti and macaroni	do.	.74	.73	.80	.86	.85	Oranges, navel	do.	.48	.54	.53	.52	.58
Bread, white	do.	.56	.55	.61	.67	.70	Oranges, Valencia	do.	.46	.58	.59	.60	.56
Bread, french	do.	1.05	1.08	1.09	1.17	--	Cherries	do.	1.27	1.35	1.63	1.15	1.75
Cookies, chocolate chip	do.	1.99	2.00	2.12	2.38	2.61	Grapefruit	do.	.51	.52	.52	.52	.66
Crackers, soda	do.	.99	1.00	1.07	--	--	Grapes, Thompson seedless	do.	1.14	1.17	1.16	1.20	1.26
Ground beef	do.	1.23	1.31	1.36	1.44	1.59	Lemons	do.	.82	.90	.93	1.00	1.07
Chuck, ground	do.	1.63	1.63	1.76	1.83	1.97	Peaches	do.	.68	.67	.68	.84	.89
Chuck roast, bone-in	do.	1.58	1.68	1.73	1.88	2.09	Pears, Anjou	do.	.75	.74	.63	.73	.76
Round roast, boneless	do.	2.44	2.53	2.63	2.76	2.93	Strawberries	12 oz.	.83	.96	1.00	1.04	1.14
Rib roast	do.	3.26	3.54	3.89	4.17	4.49	Potatoes, white	Pound	.53	.28	.26	.34	.37
Round steak, boneless	do.	2.77	2.88	2.98	3.12	3.32	Lettuce, iceberg	do.	.53	.62	.63	.60	.58
Sirloin steak, bone-in	do.	2.96	3.13	3.29	3.58	3.67	Tomatoes, field-grown	do.	.82	.82	.83	.91	1.08
T-bone steak	do.	3.97	4.24	4.72	5.07	4.99	Beans, green	do.	.87	.94	.96	1.02	--
Bacon, sliced	do.	2.08	2.14	1.88	1.77	2.12	Cabbage	do.	.31	.30	.33	.36	.40
Chops, center cut	do.	2.59	2.82	2.77	2.85	3.26	Carrots	do.	.38	.36	.38	.40	.39
Ham, rump	do.	1.47	1.54	1.60	--	--	Celery	do.	.47	.46	.51	.53	.49
Shoulder picnic	do.	1.06	1.11	1.12	1.10	1.28	Corn on the cob	do.	.41	.42	.59	--	--
Sausage	do.	1.91	1.99	1.97	2.00	2.35	Cucumbers	do.	.51	.57	.57	.66	.60
Ham, canned	do.	2.68	2.80	2.73	2.67	2.77	Onions, yellow	do.	.31	.42	.38	.36	.39
Frankfurters	do.	1.93	1.99	2.02	2.06	2.29	Peppers, sweet	do.	.90	.90	.79	.96	1.13
Bologna	do.	2.17	2.19	2.24	2.28	2.51	Orange juice, frozen concentrated	16 oz.	1.54	1.53	1.82	1.86	2.15
Chicken, fresh, whole	do.	.84	.78	.85	.93	.90	Potatoes, frozen, french-fried	Pound	.70	.69	.70	.75	.84
Chicken breast	do.	1.85	1.80	1.93	2.09	2.07	Tomatoes, canned	do.	.52	.51	.53	--	--
Chicken legs	do.	1.17	1.09	1.14	1.21	1.19	Margarine, tub	do.	1.02	.97	1.04	1.17	--
Turkey, frozen	do.	1.07	1.01	.96	.99	.99	Margarine, stick	do.	.79	.69	.73	.82	.84
Tuna, canned	do.	2.00	1.97	2.16	2.08	2.06	Shortening	do.	.87	.78	.85	.93	.92
Eggs, Grade A, large	Dozen	.87	.78	.79	1.00	1.01	Peanut butter	do.	1.60	1.80	1.79	1.81	1.89
Milk, fresh, whole	1/2 gal.	1.11	1.14	1.16	1.27	1.42	Potato chips	do.	2.68	2.75	2.62	2.86	2.96
Milk, low-fat	1/2 gal.	1.08	1.08	1.11	--	--	Sugar, white	do.	.35	.35	.37	.40	.43
Butter	Pound	2.15	2.17	2.16	2.13	1.99	Coffee, roasted	do.	2.43	2.78	2.77	3.07	2.97
Ice cream	1/2 gal.	2.36	2.46	2.46	2.60	2.60	Cola, nondiet, cans	16 oz.	.47	.44	.43	--	--
Yogurt	1/2 pt.	.58	.58	.59	--	--							
Cheese, cheddar	Pound	3.05	3.06	3.17	3.20	--							
Cheese, processed	do.	2.60	2.67	2.78	2.93	--							

-- = Not available.

Source: U.S. Department of Labor, Bureau of Labor Statistics.

Retail egg prices averaged 4.7 percent higher in 1990 than a year ago. Per capita egg consumption declined slightly, continuing a long-term trend. Consumption totaled 234 eggs per capita, 1 egg per capita less than in 1989, reflecting a decline in shell egg use. Use of processed egg products, which account for about 22 percent of egg consumption, continued to grow. Since 1980, processed egg consumption has jumped 37 percent per capita, due partly to expanded manufacturing use in food products, such as pasta and baked goods.

Dairy products

Retail prices of milk and other dairy products averaged 9.4 percent higher in 1990. Price increases were much larger for cheese (11.6 percent) and for fresh whole milk (10.8 percent) than for ice cream (6.7 percent) and other processed products. The 1990 increase in dairy prices was the largest since 1980, sharply contrasting with the 1- or 2-percent annual increases during most of the 1980's. The sharp price rise in 1990 largely reflected a substantial widening of the farm-to-retail price spread. Farm prices of milk averaged slightly higher, due mainly to a mid-year price bubble that efforts to build cheese stocks caused. Prices plummeted during the last four months of 1990, but retail prices were sluggish in responding because firms were probably waiting to see if milk prices were going to stabilize.

Fish and seafood

Fish and seafood prices increased 2.2 percent in 1990, the smallest increase in 7 years. Much larger production of canned salmon moderated prices. Total consumption of fish and seafood was 15.4 pounds per capita in 1990, down from 15.6 pounds in 1989.

Cereal and bakery products

Retail prices for cereal and bakery products averaged 5.7 percent higher in 1990, the smallest rise since 1988, when the drought induced sharp price increases for wheat and other food grains. The 1990 farm value of commodities used in cereal and bakery products averaged about 11 percent lower than in 1989. Rising retail prices reflected higher charges by bakers and cereal manufacturers to cover higher processing and marketing costs.

Annual cereal price increases have been larger than most other products in the food-at-home index in the 1980's, reflecting higher manufacturing and selling costs and strong consumer demand shown by growth in consumption. Per capita consumption of ready-to-eat cereals rose nearly 18 percent from 1980 to 1989.

Fresh fruit and vegetables

Fresh fruit prices averaged 12.1 percent higher in 1990. Price increases varied widely among fruits. Prices of bananas, the fresh fruit consumed in largest quantity, rose 5.3 percent, largely because of a worker strike in Honduras that disrupted supplies for several months. Apple prices averaged 5 percent higher, reflecting a 5-percent smaller 1990 harvest. However, orange prices averaged 9.3 percent higher, due mostly to short fresh market supplies in the Eastern States that the December 1989 freeze in Florida and Texas created, and to strong exports. The 1990 grapefruit crop, also reflecting freeze damage, was the smallest in 20 years, resulting in a 25-percent increase in retail grapefruit prices. Smaller crops also resulted in higher prices for peaches and grapes.

Prices of fresh vegetables averaged 5.6 percent higher in 1990. Most of the increase was in the first quarter, resulting from freeze damage to crops the previous December. The freeze sharply affected prices of tomatoes, cabbage, and peppers, which averaged about 100 percent higher in 1990 than a year earlier. With the exception of the first quarter, fresh vegetable prices, excluding potatoes, were generally lower in 1990, due to ample supplies. Retail prices for fresh potatoes averaged 5.6 percent higher in 1990, an upturn that continued to reflect the tight market that developed after the drought-induced 10-percent crop reduction in 1988. Another factor contributing to the price strength was strong demand from processors for potatoes to produce french fries. Rising use of french fries by fast-food firms, development of frozen microwavable products, and a surge in U.S. exports have provided an expanding market for potatoes.

Processed fruit and vegetables

Processed fruit and vegetable prices rose 6.2 percent in 1990. Prices for processed vegetables rose only 2.7 percent, but processed fruit advanced by 8.7 percent. Higher fruit prices were attributed mainly to tight supplies of frozen concentrated orange juice after the December 1989 freeze damaged the U.S. orange crop. The freeze resulted in a 16-percent increase in frozen concentrated orange juice prices in 1990.

Nonalcoholic beverages

Nonalcoholic beverage prices were up only 2 percent in 1990, which moderately affected the overall increase in grocery store food prices. Coffee prices were 2.4 percent lower, reflecting a steep decline in green coffee bean prices late in 1989. But carbonated drink prices rose 3.4 percent, the largest increase since 1981. Annual price increases averaged slightly more than 1 percent during most of the 1980's, due to price competition for market share among soft-drink companies and to industry productivity gains annually averaging 6.5 percent.

Food Consumption

A preliminary estimate indicates that there was little change in total food consumption in 1990, as measured by USDA's per capita food consumption index. This index, calculated from pounds of food and retail prices in a base year, has been relatively stable since 1987. Although total consumption was steady in 1990, there were increases in consumption of poultry and dairy products but decreases in consumption of red meat and fresh fruit and vegetables (table 5). The index includes most foods, but it does not

Table 5--Annual food consumption 1/

Food group	1980	1987	1988	1989	1990 2/
			1982-84 = 100		
Aggregate food consumption index	98.3	105.9	106.2	106.1	105.8
			Pounds per capita		
Red meat, boneless and trimmed	126	117	120	116	112
Beef and veal	73	71	70	66	65
Pork	52	46	49	48	46
Poultry, boneless	43	56	57	61	64
Eggs	34	32	31	30	30
Fish and shellfish, boneless	12	16	15	16	15
Dairy products, milk equivalent	544	601	584	568	582
Flour and cereal products	146	173	173	169	174
Fats and oils, including butter	57	63	63	61	60
Fresh fruit	87	97	95	94	87
Fresh vegetables 3/	74	86	89	92	89
Potatoes, fresh and processed	73	78	78	78	80
Sugars and sweeteners, caloric	124	133	133	134	138

1/ Data are on a retail-weight basis, except as noted. 2/ Preliminary. 3/ Data are for lettuce, tomatoes, onions, carrots, celery, corn, broccoli, asparagus, and cauliflower.

Source: U.S. Department of Agriculture, Economic Research Service, Food Consumption, Prices, and Expenditures, 1968-89, SB-828, May 1991.

represent total food use because data are not available for some fruit, vegetables, and other products. Food consumption data are derived from information on supply and use of farm products and, therefore, are not direct measures of consumption. Rather, they measure disappearance of food from commercial channels.

Beef and veal consumption declined 1 pound to 65 pounds per person on a boneless-weight basis in 1990. Pork consumption declined about 2 pounds to 46 pounds per person. But per capita poultry consumption continued its long upward trend, increasing 3 pounds to 64 pounds, boneless weight. The use of dairy products increased about 14 pounds on a milk-equivalent basis, mostly because of increased cheese consumption in 1990. Per capita consumption of fresh fruit and vegetables declined in 1990, but there has been an upward trend over the last 10 years. In 1990, consumption of flour and cereals increased further, but the use of fats and oils declined slightly, reflecting health concerns about the level of fat in the diet.

Consumers have been altering their consumption of major food groups, such as meat and poultry. Over the past decade, red meat consumption dropped 14 pounds per person, boneless weight. Beef and veal consumption fell 8 pounds per person from 1980 to 1990, and per person pork consumption fell 6 pounds. Egg consumption declined 4 pounds per capita, but poultry consumption jumped 21 pounds. While this change in consumption patterns may result partly from health concerns, low prices and greater use of poultry in fast-food outlets remain major causes for these consumption trends.

Beef consumption began falling in the mid-1970's, and growth in poultry consumption began to accelerate. The change in meat consumption patterns was responding partly to changes in relative prices. From 1976 to 1980, when the sharpest decline in beef consumption occurred, the ratio of retail beef prices to retail broiler prices rose from about 2.4 in 1976 to a peak of 3.3 in 1980. However, beef prices since then have not risen as much as broiler prices, pushing the beef-broiler ratio down slightly to 3.1 in 1990. Beef prices also rose less than pork prices during the 1980's. As a result, the price ratio of beef to pork fell from 1.7 in 1980 to 1.3 in 1990. Although beef became less expensive compared with pork and broiler chicken, beef consumption fell 11 percent, about the same as pork consumption from 1980 to 1990, but poultry consumption rose 49 percent. This suggests that consumers may have reduced beef purchases simply because retail beef prices remained higher than prices for other meats, particularly poultry. However, other factors, such as consumer tastes, nutritional awareness, product forms, and changing marketing channels also affected meat consumption. For example, the growth of poultry products in the menus of fast food chains was probably a very important reason for greater poultry consumption.

Dairy product consumption rose in the mid-1980's, reflecting declining real prices and expanding promotion. But consumption of dairy products declined in 1988-89, mainly because of reduced milk production and Government donations of products. Last year, dairy products consumption rose and was about 7 percent above 1980 levels.

Among crop foods, per capita consumption of fresh fruit rose 17 pounds during 1980 but fell sharply in 1990. The increase was due to expanded consumption of such noncitrus fresh fruit as grapes and bananas. Consumption of eight major commercial fresh vegetables rose 15 pounds per person from 1980 to 1990, mainly reflecting rising consumption of fresh tomatoes, lettuce, onions, and broccoli.

Consumption of fats and oils has declined 4 pounds per person since 1986, but remains higher than a decade ago. Decreased consumption in recent years has been in animal fats. Caloric sugar and sweetener consumption rose from 124 pounds per person in 1980 to 138 pounds in 1990, mainly reflecting greater use of corn sweeteners in soft drinks.

Market Basket Prices

To better understand why grocery store food prices increased last year, we consider separately what happened to the prices that farmers received for food commodities and what happened to charges for marketing services.

USDA uses its market basket concept to separate these two components of food prices. The market basket contains the average quantities of food that mainly originate on U.S. farms and are purchased for consumption at home in a base period. The market basket does not include fish or seafood and nonalcoholic beverages. Changes in retail prices of the market basket are components of the CPI-U for food consumed at home.

USDA divides the retail cost for a market basket of food into the farm value and the farm-to-retail price spread (table 6). The farm value represents prices farmers receive for raw commodities equivalent to foods in the market basket. The farm-to-retail price spread represents the difference between the retail price and the farm value. The price spread includes the charges for assembling foods from farms, and for processing, distributing, and retailing foods. In each of the past 10 years, a rise in the farm-to-retail price spread contributed more to the rise in food prices than did changes in the farm value.

Farm Value

Farm value is a measure of the return, or payment, farmers received for the farm product equivalent to retail food sold to consumers. The market basket farm value serves as an index of prices farmers receive for products later used for food. Farm values for individual food items are expressed in dollar amounts for comparison with the item's retail price. Farm value is calculated by multiplying farm prices times the quantities of farm product equivalent to food sold at retail. An allowance is made in farm values if byproducts are obtained in processing. The farm value usually represents a larger quantity than the retail unit, because the foodstuffs that farmers produce lose weight through storage, processing, and distribution.

The farm product equivalent varies among foods. Only a slight amount of raw milk is lost, for example, as it is handled and processed for sale in cartons to consumers. Therefore, the farm value per retail half-gallon is just a little more than the price that milk producers receive per half-gallon. In contrast, nearly 2.4 pounds of live animal yield 1 pound of Choice beef on the meat counter. The payment the cattle producer receives for that larger quantity of live animal is the gross farm value in the price of 1 pound of retail beef.

The farm value of foods in the market basket averaged 5.8 percent higher in 1990. Higher commodity prices increased the farm value in all but 2 of the 10 food groups (table 7). However, the increase in farm value was less than the year's 7.1-percent rise in retail prices of these foods. A review of the year shows that farm value during the first half of the year exceeded the rise in retail food prices. But farm value then declined for 6 consecutive months, the longest period of decline since January-May 1985, while small increases continued in retail prices.

Red meat accounts for about 36 percent of the farm value of USDA's market basket. Farmers received 12.9-percent higher prices for red meat in 1990 than in 1989, mainly reflecting 6-percent higher steer cattle prices and 24-percent higher hog prices. For 1 pound of Choice-grade beef selling for an average retail price of $2.81, cattle producers received $1.68 for the equivalent quantity of live animal (2.4 pounds) in 1990, up 11 cents from 1989. This increase reflected a 1.5-percent decline in beef production. Pork supplies declined 3 percent, resulting in a larger increase in farm value for pork. For 1 pound of pork selling at retail for $2.13 in 1990, hog producers received 87 cents for the equivalent quantity of live animal (1.7 pounds), 17 cents more than in 1989.

Higher producer prices for milk increased the farm value of dairy products by about 3 percent. A half-gallon of milk retailing for $1.42 returned the producer about 64 cents in 1990, 5 cents more than in 1989.

Farm value of fresh vegetables averaged only about 1 percent higher in 1990. However, considerable variation has occurred over the years because sharp changes in grower prices of tomatoes, lettuce, potatoes, and most other fresh vegetables are common responses to the effects of weather and other output factors. In 1990, farm value of tomatoes averaged 13 percent higher, reflecting severe freeze damage to the Florida crop early in the year. While there has been considerable variation, farm value of fresh vegetables has trended upward by an average of about 6 percent per year since 1980, nearly matching the annual rise of 6.7 percent in the CPI for fresh vegetables.

Table 6--Indexes of retail price, farm value, and the farm-to-retail price spread and farm value as a share of retail price 1/

Year	Retail price	Farm value	Farm-to-retail spread	Farm value share of retail price
	1982-84 = 100			Percent
1950	30	40	25	47
1951	33	46	26	49
1952	34	44	28	47
1953	32	41	28	45
1954	32	39	28	43
1955	31	36	29	41
1956	32	36	29	40
1957	33	37	30	40
1958	35	40	32	41
1959	34	37	32	39
1960	34	38	32	39
1961	34	37	33	39
1962	34	38	33	39
1963	34	36	33	38
1964	34	36	34	36
1965	35	40	33	38
1966	37	43	34	39
1967	37	40	35	39
1968	38	42	36	38
1969	40	46	37	39
1970	42	46	40	37
1971	43	46	41	37
1972	45	50	42	38
1973	52	68	45	44
1974	60	73	53	42
1975	64	76	58	40
1976	65	72	61	38
1977	66	72	63	37
1978	74	83	68	38
1979	82	92	77	38
1980	88	97	84	37
1981	95	100	92	36
1982	98	99	98	35
1983	99	97	100	34
1984	103	104	103	35
1985	104	96	108	32
1986	106	95	112	31
1987	112	97	120	30
1988	116	100	125	30
1989	125	107	134	30
1990 2/	134	113	144	30

1/ For a market basket of food bought in foodstores in a base period, currently 1982-84. The retail price index is derived from data from the U.S. Department of Labor, Bureau of Labor Statistics. Farm value is based on prices farmers received for commodities. The spread between the retail price and farm value represents charges for processing and marketing. 2/ Preliminary.

Table 7--Price changes for market basket of foods 1/

Item	1985	1986	1987	1988	1989	1990 2/
			Annual percentage change			
Market basket:						
Retail price	1.2	2.1	5.0	4.4	7.0	7.1
Farm value	-7.1	-1.4	2.3	3.8	6.5	5.8
Farm-to-retail spread	5.6	3.9	6.1	4.7	7.2	7.7
Meat products:						
Retail price	-.9	3.1	7.5	2.4	4.0	10.1
Farm value	-8.2	3.3	7.3	-1.6	3.8	12.9
Farm-to-retail spread	6.4	2.9	7.7	5.8	4.2	7.8
Dairy products:						
Retail price	1.9	.1	2.5	2.4	6.7	9.4
Farm value	-4.1	-2.8	.8	-2.9	9.3	2.9
Farm-to-retail spread	7.1	2.5	3.7	6.1	4.9	14.0
Poultry:						
Retail price	-1.0	7.5	-1.4	7.2	9.9	-.2
Farm value	-6.0	8.7	-18.5	17.5	6.3	-8.1
Farm-to-retail spread	5.4	6.3	18.4	-1.1	13.3	6.9
Eggs:						
Retail price	-16.6	6.8	-5.9	2.3	26.6	4.7
Farm value	-22.2	7.8	-16.9	-.2	41.3	.4
Farm-to-retail spread	-6.5	5.6	11.2	5.0	10.6	10.9
Cereal and bakery products:						
Retail price	3.8	2.8	3.5	6.4	8.4	5.7
Farm value	-8.4	-19.1	-7.0	30.6	9.8	-11.0
Farm-to-retail spread	5.5	5.4	4.5	4.4	8.3	7.4
Fresh fruit:						
Retail price	11.1	1.7	12.6	7.2	6.4	12.8
Farm value	-2.6	-6.3	9.7	2.3	-6.8	18.0
Farm-to-retail spread	18.0	5.0	13.8	8.9	10.9	11.4
Fresh vegetables:						
Retail price	-4.3	4.1	12.9	6.3	10.7	5.6
Farm value	-14.0	-3.3	24.4	-3.5	16.9	.7
Farm-to-retail spread	-.6	7.3	8.3	10.7	8.3	7.6
Processed fruit and vegetables:						
Retail price	2.6	-1.6	3.5	7.9	6.3	6.1
Farm value	10.2	-13.8	9.5	23.0	-2.6	10.2
Farm-to-retail spread	.3	2.6	1.8	3.2	9.7	4.6
Fats and oils:						
Retail price	2.2	-2.2	1.5	4.6	7.1	4.3
Farm value	-16.1	-27.0	-2.8	38.5	-7.2	12.0
Farm-to-retail spread	10.4	6.3	2.6	-3.0	11.8	2.2
Other prepared food:						
Retail price	3.3	2.6	4.2	3.7	6.4	4.5
Farm value	-6.7	4.7	2.3	4.8	9.6	1.9
Farm-to-retail spread	4.9	2.3	4.5	3.5	5.9	4.9

1/ Changes in retail prices are from the Consumer Price Index published by the U.S. Department of Labor, Bureau of Labor Statistics. The farm value is based on prices farmers received for commodities equivalent to food at retail. The spread between the retail price and farm value represents charges for processing and marketing. 2/ Preliminary.

Farm value of fresh fruit rose 18 percent in 1990. Farm value increased sharply because a freeze and cold temperatures caused a sharp drop in grapefruit and peach production and a rise in grower prices. Grower prices for apples sold for fresh market also rose, reflecting a 5-percent smaller 1990 apple crop.

The farm value of cereal and baked goods declined 11 percent in 1990, reflecting lower prices of wheat and rice. Farmers received 3.7 cents for the wheat in a 1-pound loaf of white bread selling for 70 cents in supermarkets, 1.1 cents less than in 1989. The farm value of other bread ingredients, mainly shortening and sweeteners, was 0.7 cent, unchanged from 1989.

While poultry producers continued to increase broiler and turkey output, farm prices rose through the spring. But with production increasing more than 7 percent for the year, prices fell sharply in the fourth quarter. For the year, farm value decreased about 8 percent. Broiler chicken producers received 46 cents of the average retail price of 90 cents per pound of frying chicken in 1990, about 5 cents less than in 1989.

Farm Value Share of Food Dollar

Farm value averaged 30 percent of the retail price of all foods in the market basket in 1990, the same share as in the previous 3 years (table 5). The farm value share was stable in 1990 because the increase in farm value nearly matched the rise in retail prices. This stability contrasts with the long-term trend. The farm value share of the retail cost of food averaged 38-40 percent most years during the 1960's and 1970's, but trended sharply downward from 1979 to 1987 because farm prices did not increase most years. Retail prices continued to rise, however, reflecting higher processing and marketing charges.

Farm value share varies greatly among foods (table 8). Generally, the more highly processed the product is, the smaller the farm share. For example, wheat is the principal ingredient of both flour and bread, but additional manufacturing processes are required for bread. Food derived from animal products tends to have a higher farm value share than those derived from crops because farm inputs are greater for animal products than for crops. For example, the 1990 farm share was 60 percent for choice beef, 51 percent for chicken, but only 6 percent for bread. Meat production requires two production enterprises: one for feed and the other for livestock or poultry. Most other food entails only one production enterprise. Other factors influencing the farm value share among foods include shipping distance from the farm to the consumer and product perishability. These factors may partly explain why the farm value share for California fresh oranges is much lower than that for frozen concentrated orange juice.

The farm value of most foods that come from grains, oilseeds, and fruit and vegetables represents a small share of the retail price. In 1990, farmers received about 8 percent of retail bakery and cereal prices and 23 percent of retail prices of fresh fruit (table 9). Because the farm value of these foods is small, the rise in retail prices in 1990, as in most other years, resulted mostly in a widening of the farm-to-retail price spread. For example, the farm value of fresh fruit rose 18 percent. But this increase generated only about a third of the retail price increase in fresh fruit. Most of the nearly 13-percent increase in retail prices of fresh fruit, excluding bananas, came from higher marketing charges.

Farm-to-Retail Price Spread

The farm-to-retail price spread is the difference between farm value and retail price. It represents payments for all assembling, processing, transporting, and retailing charges added to the value of farm products after they leave the farm. The farm-to-retail spread for the market basket of food averaged 7.7 percent higher in 1990, a larger increase than in 1989. The increase in the farm-to-retail price spread accounted for 76 percent of the 7.1-percent rise in the retail cost of the market basket.

The increase in the price spread reflected higher prices of inputs, such as labor and packaging, used in the food industry, and greater use of some inputs per unit of output. The hours of labor used in food retailing have increased to provide greater service and more prepared foods. Development of new products, such as microwavable foods, has increased the use of packaging materials. Increased spending on advertising and promotion of branded foods has also added to food costs.

Table 8--Retail price, farm value, and farm value share for selected foods

Food	Retail price 1990	Retail price 1989 1/	Farm value 1990	Farm value 1989 1/	Farm value share of retail price 1990	Farm value share of retail price 1989 1/
	Dollars				Percent	
Animal products:						
Eggs, Grade A large, 1 doz.	1.01	1.00	0.65	0.65	64	65
Beef, choice, 1 lb.	2.81	2.66	1.68	1.58	60	59
Chicken, broiler, 1 lb.	.90	.93	.46	.51	51	55
Milk, 1/2 gal.	1.42	1.27	.64	.59	45	46
Pork, 1 lb.	2.13	1.83	.87	.70	41	38
Cheese, natural cheddar, 1 lb.	3.50	3.20	1.19	1.20	34	38
Fruit and vegetables:						
Fresh--						
Lemons, 1 lb.	1.07	.92	.27	.27	25	29
Apples, red delicious, 1 lb.	.72	.69	.16	.13	22	18
Potatoes, Northeast, 10 lbs.	3.38	3.06	.76	.77	22	25
Oranges, California, 1 lb.	.57	.56	.13	.11	23	19
Grapefruit, 1 lb.	.66	.52	.16	.12	25	23
Lettuce, 1 lb.	.60	.61	.09	.10	16	17
Frozen--						
Orange juice conc., 12 fl. oz.	1.62	1.39	.56	.56	34	40
Broccoli, cut, 1 lb.*	--	1.21	--	.25	--	21
Corn, 1 lb.*	--	1.07	--	.12	--	11
Peas, 1 lb.*	--	1.06	--	.12	--	11
Green beans, cut, 1 lb.*	--	1.09	--	.11	--	10
Canned and bottled--						
Peas, 303 can (17 oz.)*	--	.61	--	.10	--	16
Corn, 303 can (17 oz.)*	--	.51	--	.08	--	16
Applesauce, 25-oz. jar*	--	.90	--	.17	--	19
Pears, 2-1/2 can*	--	1.14	--	.20	--	18
Peaches, cling, 2-1/2 can*	--	1.07	--	.17	--	16
Apple juice, 64-oz. bottle*	--	1.36	--	.28	--	21
Green beans, cut, 303 can*	--	.49	--	.06	--	12
Tomatoes, whole, 303 can*	--	.52	--	.05	--	10
Dried--						
Beans, 1 lb.*	--	.70	--	.30	--	43
Raisins, 15-oz. box*	--	1.30	--	.39	--	30
Crop products:						
Sugar, 1 lb.	.40	.37	.15	.15	38	39
Flour, wheat, 5 lbs.	1.25	1.22	.30	.39	24	32
Shortening, 3 lbs.	2.75	2.79	.69	.61	25	22
Margarine, 1 lb.	.84	.82	.19	.17	23	21
Rice, long grain, 1 lb.	.50	.50	.10	.10	19	19
Prepared foods:						
Peanut butter, 1 lb.	1.89	1.81	.48	.46	25	26
Pork and beans, 303 can (16 oz.)*	--	.41	--	.09	--	22
Potato chips, regular, 1-lb. bag*	--	1.93	--	.29	--	15
Chicken dinner, fried, frozen, 11 oz.*	--	1.40	--	.18	--	13
Potatoes, french fried, frozen, 1 lb.	.84	.75	.11	.10	13	13
Bread, 1 lb.	.70	.67	.04	.06	6	8
Corn flakes, 18-oz. box*	--	1.56	--	.10	--	6

-- = Not available.

1/ January-June average for items noted with asterisk; annual average for other foods and for 1990 data.

Table 9--Market basket of food products originating on U.S. farms by food group: Index of retail cost, farm value, and farm-to-retail price spread, and farm value share of retail cost 1/

Year	Meat products				Poultry				Eggs			
	Retail cost	Farm value	Farm-to-retail spread	Farm value share	Retail cost	Farm value	Farm-to-retail spread	Farm value share	Retail cost	Farm value	Farm-to-retail spread	Farm value share
	1982-84 = 100			Percent	1982-84 = 100			Percent	1982-84 = 100			Percent
1965	36	41	30	59	50	51	49	57	55	53	60	62
1966	38	44	34	58	52	53	53	53	63	65	50	66
1967	37	41	34	56	49	45	54	49	52	48	60	59
1968	38	42	33	54	51	48	54	51	56	54	61	61
1969	42	48	35	56	54	51	57	51	66	69	61	67
1970	43	47	40	53	53	46	61	46	66	64	69	63
1971	43	46	40	52	54	47	60	47	57	50	68	57
1972	48	55	42	56	54	48	60	49	56	50	68	57
1973	60	74	46	60	77	84	68	59	84	90	71	70
1974	61	67	55	54	73	76	69	56	84	89	76	68
1975	66	78	56	57	80	88	71	59	82	84	78	66
1976	66	70	63	51	77	79	75	55	91	97	81	68
1977	65	70	60	53	78	80	74	56	88	87	90	64
1978	77	85	69	54	85	93	76	58	82	83	81	65
1979	90	97	84	52	89	92	86	55	90	93	85	66
1980	93	97	89	51	94	96	92	54	89	88	89	64
1981	96	97	95	49	98	95	101	52	96	99	90	66
1982	101	104	98	52	96	91	101	51	93	91	97	63
1983	99	97	102	49	97	96	98	53	98	99	95	65
1984	100	99	100	50	107	113	101	56	109	110	107	65
1985	99	91	107	47	106	106	107	53	91	86	100	61
1986	102	94	110	47	114	115	113	54	97	92	106	61
1987	110	101	118	47	113	94	134	45	92	77	118	54
1988	112	100	125	45	121	110	133	49	94	77	124	53
1989	117	103	130	45	133	117	151	47	118	108	138	58
1990	128	117	141	46	132	108	161	44	124	108	153	56

See footnotes at end of table.

--Continued

Table 9--Market basket of food products originating on U.S. farms by food group: Index of retail cost, farm value, and farm-to-retail price spread, and farm value share of retail cost 1/--Continued

Year	Dairy products				Fats and oils				Fresh fruit			
	Retail cost	Farm value	Farm-to-retail spread	Farm value share	Retail cost	Farm value	Farm-to-retail spread	Farm value share	Retail cost	Farm value	Farm-to-retail spread	Farm value share
	---------1982-84 = 100---------			Percent	--------1982-84 = 100---------			Percent	---------1982-84 = 100--------			Percent
1965	36	33	40	44	35	41	34	31	29	35	27	31
1966	38	37	40	47	37	44	34	32	31	38	28	32
1967	40	38	42	47	37	38	37	28	31	37	28	31
1968	41	40	42	47	36	35	36	26	36	48	32	35
1969	42	42	43	48	36	35	36	26	34	40	32	31
1970	45	44	45	48	38	43	37	30	34	37	33	28
1971	46	44	47	47	42	49	39	32	37	42	35	30
1972	47	46	48	48	43	42	43	27	39	44	37	30
1973	51	52	50	50	47	66	40	38	44	56	40	33
1974	60	61	60	49	71	124	52	47	49	55	46	30
1975	62	63	61	50	77	97	69	34	50	58	47	30
1976	67	71	64	52	65	79	60	26	50	54	48	28
1977	69	72	68	50	71	95	62	26	58	65	55	29
1978	74	78	71	51	78	98	70	34	71	87	66	32
1979	83	88	78	52	84	106	75	34	80	89	77	29
1980	91	96	86	52	89	96	87	29	84	84	84	26
1981	97	102	93	51	99	100	98	27	88	87	89	26
1982	99	100	97	49	96	80	102	22	100	106	97	33
1983	100	100	100	48	97	96	98	27	94	80	100	27
1984	101	99	103	47	107	124	100	31	107	114	103	34
1985	103	95	110	44	109	104	111	26	118	111	122	30
1986	103	93	113	43	106	76	118	19	120	104	128	27
1987	106	93	118	42	108	74	120	18	136	114	146	26
1988	108	91	125	40	113	103	117	24	145	117	159	25
1989	116	99	131	41	121	96	131	21	155	109	176	22
1990	126	102	149	39	126	107	133	23	175	128	196	23

See footnotes at end of table.

--Continued

Table 9--Market basket of food products originating on U.S. farms by food group: Index of retail cost, farm value, and farm-to-retail price spread, and farm value share of retail cost 1/--Continued

Year	Fresh vegetables 4/				Processed fruit and vegetables				Bakery and cereal products			
	Retail cost	Farm value	Farm-to-retail spread	Farm value share	Retail cost	Farm value	Farm-to-retail spread	Farm value share	Retail cost	Farm value	Farm-to-retail spread	Farm value share
	---------1982-84 = 100---------			Percent	--------1982-84 = 100---------			Percent	---------1982-84 = 100--------			Percent
1965	34	41	31	35	35	37	35	21	32	5130	17	
1966	33	38	31	34	36	36	36	20	33	56	31	18
1967	33	38	31	32	36	33	37	18	34	54	32	17
1968	35	40	33	33	38	38	38	20	35	52	33	16
1969	36	42	35	33	39	39	38	21	36	52	34	16
1970	39	43	38	32	39	37	40	19	38	56	36	16
1971	40	46	38	33	41	38	42	18	40	57	38	16
1972	43	47	41	32	42	40	42	19	40	60	37	17
1973	53	64	48	35	44	43	44	19	44	90	38	22
1974	58	67	54	34	54	60	53	22	57	130	48	25
1975	55	67	51	35	61	66	60	21	63	106	57	18
1976	58	67	55	33	62	63	62	20	62	86	59	15
1977	65	74	62	33	65	59	66	18	63	72	61	12
1978	70	75	69	30	71	88	67	25	68	83	66	13
1979	73	71	73	28	77	91	74	24	75	95	73	14
1980	79	73	81	27	83	97	79	23	84	111	81	14
1981	94	104	90	32	92	106	89	23	92	110	90	13
1982	94	95	94	34	97	100	97	24	97	96	97	12
1983	98	97	98	34	98	93	100	23	100	101	99	12
1984	108	108	108	34	104	107	103	24	104	103	104	12
1985	104	93	109	31	107	118	104	26	108	94	110	11
1986	108	90	117	28	105	102	106	23	111	76	116	8
1987	122	110	128	31	109	111	108	24	115	71	121	8
1988	129	106	141	28	118	137	112	28	122	93	126	9
1989	143	123	153	29	125	134	122	25	132	102	137	9
1990	151	124	165	28	133	147	128	26	140	91	147	8

1/ See table 6 for aggregate market basket and explanation of data. 2/ Includes butter. 3/ Excludes butter and includes peanut butter. 4/ Includes potatoes.

The market basket farm-to-retail price spread attempts to measure charges for performing services connected with a fixed quantity of foods of a constant type and quality. However, the types of services incorporated into food sold in grocery stores have changed over time as a result of new product introductions and greater food preparation, such as fruit and vegetables sold at salad bars. These new and usually higher value foods are incorporated into the market basket retail price measurement calculations over time, thus changing the type and quality of foods in the market basket. These changes in foods marketed with added services may increase price spreads.

Price spreads increased for all food groups in the market basket in 1990, reflecting higher costs of marketing inputs, variations in farm prices, and greater use of some inputs, such as labor in food retailing (table 7). The farm-to-retail spread for red meat increased about 8 percent, due mainly to increases for pork. The price spread for pork increased about 11 percent, a likely adjustment to reduced pork sales and strong demand that resulted in a dramatic rise in prices. A year earlier, the price spread for pork had declined about 2 percent, and both the farm value and retail pork price were relatively stable. The 1990 farm-to-retail price spread for Choice beef increased about 4 percent.

The price spread for cereal and bakery products widened 7.4 percent in 1990, which was slightly less than the yearly increase in 1989. The increase reflected higher manufacturing and marketing costs, as well as much lower farm value that was largely absorbed by the spread. Industry advertising and product development costs rose, to capitalize on growing demand for products that consumers perceive to be nutritionally beneficial. However, sales of ready-to-eat cereals fell 1 percent in 1990 for the first time in more than a decade.

The price spread for poultry widened by about 7 percent in 1990, nearly absorbing all the decline in farm value. The price spread for eggs rose 11 percent last year, accounting for nearly all of the rise in retail egg prices.

The price spread for dairy products widened 14 percent, the largest increase among the 10 food groups in the market basket. The spread for dairy products grew more in 1990 than at any time since 1980. The marketing spread for dairy products most years of the decade rose about the same as most foods, even though the fluid milk processing industry experienced a large 4.5-percent annual increase in labor productivity during the 1980's. For much of 1990, the marketing spread for dairy products was about 10 percent higher than it was a year earlier. Farm value of milk dropped sharply in the fourth quarter; however, the marketing spread for dairy products widened to 21 percent above a year earlier. The unusually large increase in the spread for dairy products in 1990 probably reflects both the instability of markets that record-high farm prices caused earlier in the year, and the strong demand that increased commercial use of dairy products 3 percent in 1990.

The farm-to-retail price spread increased about 11 percent for fresh fruit and 7.5 percent for fresh vegetables. Price spreads for these commodities tend to vary with farm values. When the farm values increase, as in 1990, the price spread increases. Movement in the same direction suggests that pricing through marketing channels is based largely on a percentage markup on costs, rather than on a constant absolute markup.

A Look Back at the Decade

Retail prices of the market basket of food bought in grocery stores rose 52 percent during 1980-90. In contrast, the farm value was only 16 percent higher last year than in 1980 (figure 2). But the farm-to-retail price spread rose 71 percent, which accounted for 87 percent of the rise in retail prices.

The farm-to-retail price spread for the market basket of foods has increased each year since 1980. Increases in the farm-to-retail price spread usually were close to the general inflation rate, reflecting the link (in terms of products and services used) between the food industry and the economy. Input costs of the food industry have gone up with the rise in the general price level, resulting in higher food processing and distributing charges.

Figure 2
Food price components
Rise in food prices was mainly due to widening price spread.

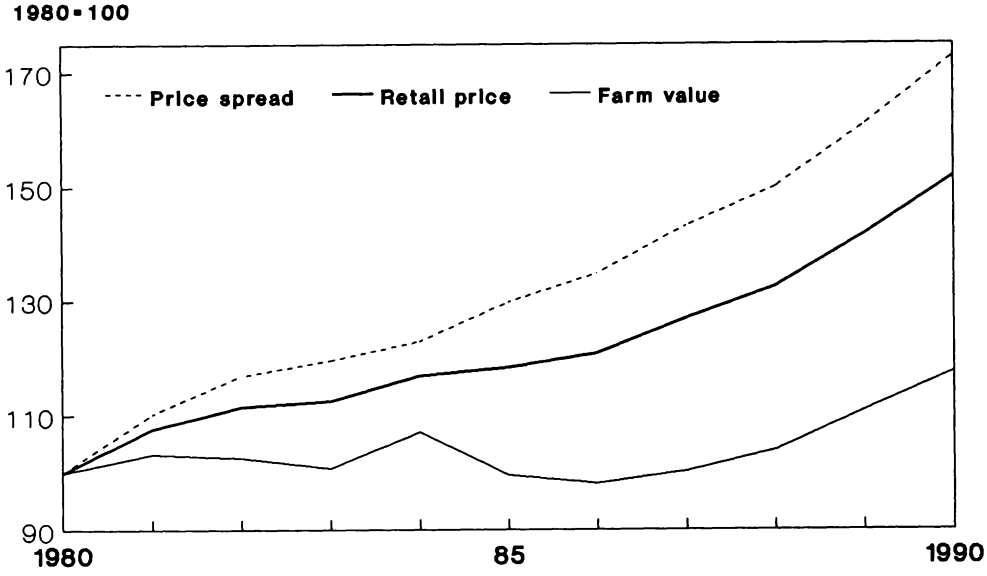

Retail prices based on the CPI for food eaten at home. Farm value based on prices received by farmers. Price spread represents processing and distributing charges.

Farm value of food varied during the 1980's, rising some years and then declining. Very large crop production and expanded meat supplies limited the rise in farm value to 3 percent in 1981. As a result, retail food prices went up much less than did inflation. Crop harvests were again large in 1982.

Although meat production declined slightly, the farm value slightly declined because the recession weakened domestic and foreign demand for agricultural commodities. The farm value declined in 1983 because of increased livestock production, particularly of hogs, and continued large supplies and weak demand for most food commodities. Farm value rose about 6 percent in 1984, mainly because of smaller supplies of oilseeds and fruit that drought damage to the soybean crop the previous year and a winter freeze of the citrus crop caused. However, a decline in farm value in 1985 and 1986, reflecting larger livestock and crop production, more than offset the rise in farm value in 1984. Farm value increased the last 4 years of the decade, due in large measure to higher cattle and poultry prices and the 1988 drought, which greatly reduced production of food grains and some vegetable crops. The 5.8-percent rise in farm value in 1990 was the third largest of the decade.

During the 1970's, farm value and the farm-to-retail price spread moved at similar rates. Between 1970 and 1980, all three market basket series--farm value, farm-to-retail spread, and retail price--more than doubled and greatly exceeded the rise in the 1980's.

The contrasting trend in the market basket series between the 1970's and the 1980's largely reflects the much different behavior of farm value. Amid strong world demand for grains and oilseeds and reduced supplies of meat, farm value rose 46 percent during 1972-74. Wheat and soybean prices at that time rose sharply following huge sales to the Soviet Union. Livestock price increases reflected higher feed costs and Government actions to limit retail meat price increases that disrupted livestock marketings and production. During 1978-80, a smaller but significant 17-percent increase occurred in farm value, largely because of lower beef production and strong world grain markets.

Price Spreads for Selected Foods

Higher prices for meat, dairy products, and fresh fruit heavily contributed to the rise in the CPI for food in 1990. Farm value also rose for most of these commodities, reflecting strong demand and smaller supplies of some commodities. The farm-to-retail price spread increased for all foods.

Choice Beef

Retail prices increased sharply in 1990 for the fourth consecutive year (table 10). The 1990 weighted average price of Choice beef, the highest yearly average on record, was $2.81 per pound, 15 cents higher than in 1989, and 54 cents higher than in 1986.

Table 10--Choice beef and pork: Retail price, farm value, price spreads, and the farm value share of the retail price

Item	Retail price 1/	Wholesale value 2/	Net farm value 3/	Price spreads: Farm-to-retail	Price spreads: Wholesale-to-retail 4/	Price spreads: Farm-to-wholesale 5/	Farm value share 6/
	Cents per retail pound						Percent
Choice beef: 7/							
1980	233.6	171.1	145.7	87.9	62.5	25.4	62
1981	234.7	164.4	139.1	95.6	70.3	25.3	59
1982	238.4	165.9	141.1	97.3	72.5	24.8	59
1983	234.1	160.1	136.8	97.3	74.0	23.3	58
1984	235.5	162.5	140.7	94.8	73.0	21.8	60
1985	228.6	148.8	127.4	101.2	79.8	21.4	56
1986	226.8	146.5	125.0	101.8	80.3	21.5	55
1987	238.4	160.0	138.7	99.7	78.4	21.3	58
1988	250.3	169.4	148.3	102.0	80.9	21.1	59
1989	265.7	176.8	157.6	108.1	88.9	19.2	59
1990	281.0	189.6	168.4	112.6	91.4	21.2	60
Pork:							
1980	139.4	98.0	63.2	76.2	41.4	34.8	45
1981	152.4	106.7	70.3	82.1	45.7	36.4	46
1982	175.4	121.8	88.0	87.4	53.6	33.8	50
1983	169.8	108.9	76.5	93.3	60.9	32.4	45
1984	162.0	110.1	77.4	84.6	51.9	32.7	48
1985	162.0	101.1	71.4	90.6	60.9	29.7	44
1986	178.4	110.9	82.4	96.0	67.5	28.5	46
1987	188.4	113.0	82.7	105.7	75.4	30.3	44
1988	183.4	101.0	69.4	114.0	82.4	31.6	38
1989	182.9	99.2	70.4	112.5	83.7	28.8	38
1990	212.6	118.3	87.2	125.4	94.3	31.1	41

1/ Composite of all cuts. 2/ For quantity equivalent to 1 retail pound: beef, 1.142 pounds of wholesale cuts; pork, 1.06 pounds of wholesale cuts. 3/ For quantity of live animal equivalent to 1 retail pound, minus byproduct allowance: beef, 2.4 pounds; pork, 1.7 pounds. 4/ Includes retailing, meat fabricating, wholesaling, and intracity transportation. 5/ Charges for livestock processing and transporting of meat to city where consumed. 6/ Percentage of retail price. 7/ Revised.

Prices at retail increased during 1990 from $2.71 per pound in February to a high of $2.95 in December. Prices of individual cuts ranged from an annual average of $1.59 per pound for ground beef to more than $6.00 per pound for the most expensive steaks.

Procedures used to calculate Choice beef prices and spreads were revised during August 1990. Major changes included replacing the carcass value at the wholesale level with a boxed beef value, and moving from a partially bone-in to a mostly boneless product at the retail level. When the changes were made, the historical data were also revised in accordance with the new procedures; thus, the historical data presented here differs from those previously reported.

Farm value increased about 4 cents less than the retail price from 1989 to 1990. But, farm value averaged 60 percent of the retail price of beef in 1990, 1 percent higher than in 1989. Farm value is now computed using the USDA Agricultural Marketing Service's five-region direct market price series for live slaughter steers, 65- to 80-percent Choice. Prices per pound of slaughter steers are multiplied times 2.4 pounds, the quantity of live animal required to sell 1 pound of Choice beef at retail. We then estimate the value of byproducts, principally the hide obtained from the slaughtered animal. We subtract this byproduct value to obtain the farm value of the meat alone.

The farm-to-retail price spread for Choice beef last year increased 4.5 cents to an average of $1.13 per pound. The spread varied from a high of $1.21 in September to a low of $1.03 in March and April. The price spread for beef has increased slowly. Even with increases the past 2 years, the price spread was only 18 percent higher in 1990 than in 1981.

The farm-to-retail price spread pays for various marketing functions. The 1990 change in procedures combined the slaughtering and boxing functions with the packer. Carcass movement of beef is now very small, but some difference does exist in the extent of fabrication before packers box beef. The estimated cost of slaughtering and boxing beef has been quite stable in recent years, except for a small variation in 1989 (table 11).

Transportation of beef from the packer to the retail marketing area cost 3.8 cents per retail pound in 1990. Warehousing and store delivery were estimated at 18.5 cents per pound at retail. This estimate is based on data in the 1982 Census of Wholesale Trade, published by the U.S. Department of Commerce, which indicated that these costs represented 8.3 percent of gross sales by meat wholesalers.

Cutting and merchandising of Choice beef cost 73 cents per pound in 1990. This amount represents the difference between the total of all other spreads and the retail price. Data for 1985-90 indicate a slow upward trend in both warehousing and store delivery and in cutting and merchandising the beef. The increases reflect the effect of inflation on marketing costs. In contrast, slaughtering and boxing costs have not increased, partly because of changes in byproduct values and the shift to boxed beef.

Pork

Retail pork prices averaged a record high $2.13 in 1990, 30 cents above a year earlier (table 10). Per capita pork supplies were down in 1990. The farm value in 1990 increased 17 cents above that in 1989, averaging 87 cents per retail pound equivalent. The farm value share increased from 38 percent to 41 percent.

Prior to 1990, the record-high net farm value was in 1982 at 88 cents per pound. The retail price and the farm-to-retail price spread in 1982 were, however, 38 cents lower than those in 1990, with the farm value share at 50 percent rather than the 1990 41-percent level. Consumption of pork on a per capita retail-weight basis was about the same in 1982 and 1990.

Farm value is computed from the average price of barrows and gilts at seven midwestern markets. This average price is then multiplied times 1.7 pounds, the quantity of live animals needed to sell 1 pound of pork at retail. A value of lard and other byproducts is then subtracted to obtain the net farm value.

Table 11--Choice beef and pork: Farm value, marketing costs by function, and retail price

Item	1985	1986	1987	1988	1989	1990
			Cents per retail pound			
Beef:						
Farm value	127.4	125.0	138.7	148.3	157.6	168.4
Slaughtering and boxing carcass	17.5	17.7	17.5	17.4	15.5	17.4
Intercity transportation	3.9	3.8	3.8	3.7	3.7	3.8
Warehousing and store delivery	15.0	14.9	15.7	16.5	17.5	18.5
Cutting and merchandising	64.8	65.4	62.7	64.4	71.4	72.9
Retail price	228.6	226.8	238.4	250.3	265.7	281.0
Pork:						
Farm value	71.4	82.4	82.7	69.4	70.4	87.2
Slaughtering and processing	26.1	25.0	26.8	28.2	25.4	27.6
Intercity transportation	3.6	3.5	3.5	3.4	3.4	3.5
Warehousing and store delivery	10.7	11.7	12.4	12.1	12.0	14.0
Cutting and merchandising	50.2	55.8	63.0	70.3	71.7	80.3
Retail price	162.0	178.4	188.4	183.4	182.9	212.6

The farm-to-retail price spread for pork increased to $1.25 per pound in 1990. Among components of the farm-to-retail spread for pork, the slaughtering and processing functions cost 28 cents in 1990, 3 cents more than in 1989, but about the same as in 1988 (table 11). This spread represents charges for cutting the carcass into primals and for processing hams, bacon, and other products. We estimated this spread by deducting the farm value and intercity transportation costs from a composite wholesale price of pork.

The transportation price spread for pork between the packer and retail marketing area was 3.5 cents per pound in 1990. The warehousing and store delivery spread was estimated at about 14 cents per retail pound in 1990, a 2-cent increase from the previous 3 years.

The cutting and merchandising price spread of 80 cents made up the largest component of the farm-to-retail price spread for pork. This figure was about 8 cents higher than in 1989, and had increased 30 cents from 1985. The cutting and merchandising component is derived as a residual between the total of all other functions and the retail price. Cost inflation and the time lag between changes in farm, wholesale, and retail prices may partly explain the increase in this spread.

Broilers

Broiler prices declined at both the farm and retail levels in 1990, mainly reflecting 7-percent greater production. Retail prices fell 2.8 cents per pound for whole, ready-to-cook chicken, but farm value dropped 4.5 cents in 1990. Thus, the marketing spread rose 1.7 cents in 1990. The spread was stable from 1981 to 1986, averaging 33.5 cents per pound (table 12). Since 1986, the marketing spread has trended up, due partly to an apparent increase in the retailing margin. Broiler processing costs have also increased because little gain has occurred in labor productivity since 1985 to offset rising labor and other input costs.

Table 12--Broilers and eggs: Farm value, marketing costs by function, and retail price

Item	Farm value 1/	Marketing costs: Assembly and procurement	Processing	Intercity transportation	Wholesaling	Retailing	Retail price
				Cents			
Broilers, ready-to-cook, whole (pound):							
1975	37.0	1.4	7.5	1.4	3.9	12.0	63.2
1976	32.6	1.1	7.8	1.3	3.7	13.2	59.7
1977	33.0	1.1	8.0	1.4	3.7	12.9	60.1
1978	36.8	1.2	8.7	1.4	3.8	14.6	66.5
1979	36.8	1.3	9.6	1.6	4.2	14.5	68.0
1980	39.4	1.4	9.8	1.7	4.3	14.3	70.9
1981	39.4	1.6	10.3	1.7	4.3	15.9	73.2
1982	37.8	1.6	10.4	1.7	4.3	15.6	71.4
1983	41.2	1.6	10.5	1.7	4.3	13.2	72.5
1984	46.7	1.6	10.8	1.7	4.4	15.8	81.0
1985	42.4	1.6	9.3	1.7	4.4	16.9	76.3
1986	49.0	1.6	9.1	1.7	4.4	17.7	83.5
1987	40.2	1.6	9.1	1.7	4.4	21.5	78.5
1988	48.1	1.6	9.1	1.7	4.4	20.5	85.4
1989	50.8	1.7	9.9	1.8	4.6	23.9	92.7
1990	46.3	1.7	10.4	1.9	4.8	24.8	89.9
Eggs, Grade A, large (dozen):							
1975	50.8	1.2	9.3	1.5	3.7	10.5	77.0
1976	58.0	.9	9.6	1.4	3.5	11.5	84.9
1977	53.8	.9	10.3	1.5	3.5	12.3	82.3
1978	49.7	.9	10.5	1.6	3.4	12.4	78.5
1979	53.7	1.1	11.7	1.8	3.9	13.7	85.9
1980	51.0	1.2	12.4	1.9	4.1	13.7	84.3
1981	56.9	1.2	12.2	1.9	4.1	13.6	89.9
1982	54.5	1.2	12.2	1.9	4.1	12.8	86.7
1983	59.5	1.0	11.6	1.7	3.5	12.1	89.4
1984	66.0	1.0	12.1	1.5	3.7	16.2	100.5
1985	51.4	1.0	11.0	1.5	3.7	11.8	80.4
1986	55.4	1.0	11.0	1.5	3.7	14.4	87.0
1987	46.0	1.0	11.0	1.5	3.7	15.1	78.3
1988	46.0	1.0	11.2	1.5	3.7	15.6	79.0
1989	64.4	1.0	11.4	1.6	3.7	17.7	99.8
1990	64.7	1.1	11.4	1.7	3.9	18.6	101.4

1/ Farm values are derived from U.S. average broiler and market egg prices that NASS publishes monthly for farmers. Broiler prices are multiplied times 1.41 to convert to retail equivalent. The egg price is multiplied times 1.03 to allow for marketing loss. Some historical data have been revised.

Much of the demand for broilers is for further processed products. Broiler producers are cutting chicken into parts, and most producers are further processing chicken into fillets, nuggets, and other value-added products according to buyers' specifications. The processor generally realizes a more favorable gross margin and increased volume from this further processing. Most of these products are served through fast-food and institutional outlets, but considerable volumes of chicken parts are sold through retail stores for home consumption. These further processed products are not included in farm-to-retail price spread computations, but they represent a source of market strength that supported prices in 1990 while consumption sharply rose.

Eggs

Following the largest price increase in years in 1989, larger egg supplies stabilized egg prices in 1990. For the year, prices averaged $1.01 per dozen of grade A large, 1 cent higher than the 1989 price (table 12). The farm value of eggs rose 0.3 cent per dozen. Thus, the price spread between farm value and retail price slightly widened to 35.7 cents per dozen. The price spread for eggs has trended up since 1985, mainly reflecting apparent increases in the retailer margin, which was 18.6 cents per dozen in 1990.

Fluid Milk

The retail price for a half gallon of whole milk sold in stores averaged $1.42 in 1990, up 15.5 cents from a year earlier (table 13). This was the second consecutive large annual increase in prices. The price increases in 1989-90 both exceeded the total price increase from 1980 to 1988. A rise in farm prices of milk, coupled with a large increase in the farm-to-retail price spread, account for the large 1990 rise in the retail price for milk.

The farm value of a half gallon of whole milk in 1990 was 63.6 cents, nearly 5 cents higher than in 1989. The farm value represented 45 percent of the consumer's milk dollar in 1990, only slightly less than the previous year, but 4 percentage points lower than in the mid-1980's.

Processing and wholesaling typically are performed by the same firm. The combined processing and wholesaling margin in 1988 (the latest data available) was about 38 cents per half-gallon, 33 percent of the retail price. The retailing margin was 19 cents per half gallon in 1988, which represented 16 percent of the retail price.

Fruit and Vegetables

Processing and other marketing costs for selected fruit and vegetables, such as fresh potatoes, lettuce, oranges, frozen concentrated orange juice, and canned tomatoes, help explain increases in price spreads and, therefore, retail prices over the years (table 14).

Retailing accounts for the largest share of the marketing expense for the fresh produce items (potatoes, oranges, and lettuce). Retailing expenses for oranges averaged 54 percent of the farm-to-retail spread during 1988-90. The retailing share averaged 67 percent for lettuce and 71 percent for potatoes. Produce margins generally exceed the average margin of the typical supermarket, and produce is the most profitable and fastest growing department of the typical store. While gross margins alone do not reflect actual profitability, the percentage of storewide gross profit dollars that fresh produce contributed has been much greater than the contribution to store sales would suggest. Produce accounts for 8.7 percent of total sales of the typical supermarket, but produce yields about 20 percent of net profit dollars, according to a survey by the Produce Marketing Association.

Over the past 3 years, packing costs made up the second largest share of the farm-to-retail price spread for fresh produce items, averaging 17 percent for lettuce and 15 percent for oranges and potatoes. Intercity transportation costs were the third largest share, accounting for 13 percent of the price spread for lettuce and 8 percent for potatoes. For oranges, wholesaling was third largest share at 14 percent.

Table 13--Fluid whole milk: Farm value, marketing costs by function, and retail price per half gallon

Item	Farm value 1/	Marketing costs: Assembly and procurement 2/	Marketing costs: Processing 3/	Marketing costs: Wholesaling 3/	Marketing costs: Retailing 4/	Retail price 5/
	Cents					
1974	40.9	2.7	10.7	13.6	8.9	76.8
1975	41.2	2.8	11.4	13.6	7.9	76.9
1976	46.2	2.8	10.6	12.1	9.3	81.0
1977	45.1	2.9	13.2	12.6	8.3	82.1
1978	47.0	3.1	14.6	14.3	7.1	86.1
1979	52.2	3.8	15.1	16.6	8.3	96.0
1980	55.8	4.5	15.6	18.9	10.2	104.9
1981	59.5	4.7	16.0	19.1	12.4	111.7
1982	59.2	4.5	16.5	19.3	13.0	112.4
1983	59.5	4.3	16.6	17.8	14.6	112.8
1984	58.2	4.4	17.3	17.3	15.5	112.7
1985	56.1	4.8	18.7	17.9	15.9	113.4
1986	54.8	4.7	19.5	18.4	14.0	111.4
1987	56.1	4.9	19.2	18.1	15.4	113.7
1988	54.2	5.3	19.5	18.4	19.0	116.4
1989	58.9	--	--	--	--	126.9
1990	63.6	--	--	--	--	142.4

-- = Not available.

1/ Prices farmers received are normally quoted for 3.5-percent butterfat at plant of first receipt. This price has been adjusted for transportation from farm to first plant to get the farm price, then adjusted to get the value of milk containing 3.3-percent butterfat, the usual butterfat content at retail. There are approximately 23.2 half gallons of milk per 100 pounds. 2/ Nonfarm costs of supplying milk to processors, including laboratory and onfarm field service to assure quality, pickup at farms, transportation, receiving and reloading as necessary, and management of raw milk reserves. 3/ Data for processing and wholesaling represent costs for 30 fluid milk processor-distributor firms that represent moderate-sized, single-plant operations throughout the country. Very small plants and plants that retail food chains operated are not included. 4/ May include some wholesaling formerly performed by processors. 5/ Average of Bureau of Labor Statistics monthly prices.

In 1990, the farm-to-retail spread for potatoes increased substantially, reflected by a 32-cents per pound increase in the retail price of Northeast round white potatoes. Most of the rise in the farm-to-retail spread was in retailing charges. Retail prices, farm values, and marketing charges were nearly stable for fresh oranges and lettuce in 1990.

For canned tomatoes, processing charges make up 60 percent of the farm-to-retail price spread. A principal component of the processing spread is packaging: the metal can, the label, and the shipping case. Processing charges went up little during 1988-90. Retail canned tomato prices rose moderately in the past 3 years, mainly reflecting increases in the retailing spread.

The retail price of a 12-ounce can of frozen concentrated orange juice took a dramatic jump in 1990, increasing 23 cents to $1.62. The price increase resulted from a severe freeze in Florida that greatly reduced domestic orange juice production. Reduced yields of juice from oranges depressed grower orange

Table 14--Selected fruit and vegetables: Farm value, marketing costs by function, and retail price

Item	Farm value 1/	Marketing costs: Packing or processing	Marketing costs: Intercity transportation 3/	Marketing costs: Wholesaling	Marketing costs: Retailing	Retail price 3/
			Cents			
Potatoes, Northeast, round white (10-lb. bag):						
1982	47.7 4/	19.8	10.5	8.1	95.1	181.3 5/
1983	55.7 4/	15.5	8.3	6.4	74.4	160.2 5/
1984	67.8 4/	18.2	9.7	7.5	87.6	190.9 5/
1985	37.0 4/	18.2	9.7	7.5	87.8	160.3 5/
1986	50.0 4/	15.7	8.4	6.4	75.3	155.8 5/
1987	61.9 4/	26.3	14.0	10.8	126.5	239.5 5/
1988	49.5 4/	26.5	14.1	10.9	127.4	228.4 5/
1989	76.8 4/	33.9	18.1	14.0	163.1	305.9 5/
1990	76.0 4/	38.8	20.7	16.1	186.8	338.4 5/
Oranges, California (pound):						
1982	17.1	4.0 6/	5.2	5.5	15.8	47.6
1983	5.3	8.6 6/	5.2	5.9	13.7	38.7
1984	17.2	5.8 6/	5.4	4.9	16.6	49.9
1985	12.4	9.4 6/	5.4	6.8	19.4	53.4
1986	8.2	9.9 6/	5.7	6.0	17.8	47.6
1987	10.0	9.9 6/	6.2	9.0	19.9	55.0
1988	11.8	8.0 6/	5.4	8.2	23.0	56.4
1989 9/	11.3	8.3 6/	5.4	9.0	22.1	56.1
1990	13.1	6.6 6/	5.8	4.3	26.8	56.6
Iceberg lettuce, California (pound):						
1982	8.5 7/	6.4 8/	5.7	5.2	30.4	56.2
1983	6.8 7/	6.4 8/	5.7	5.3	31.2	55.5
1984	5.1 7/	6.4 8/	5.7	4.4	28.8	50.4
1985	8.2 7/	6.4 8/	5.6	5.1	27.3	52.6
1986	6.8 7/	6.8 8/	6.0	6.1	28.2	53.9
1987	11.1 7/	6.8 8/	6.4	4.6	30.6	59.5
1988	10.1 7/	7.4 8/	5.6	4.3	32.9	60.3
1989	10.0 7/	7.3 8/	6.1	2.1	35.1	60.6
1990	9.3 7/	7.3 8/	5.6	4.5	32.9	59.6

--Continued

Table 14--Selected fruit and vegetables: Farm value, marketing costs by function, and retail price --Continued

Item	Farm value 1/	Marketing costs: Packing or processing	Marketing costs: Intercity transportation 3/	Marketing costs: Wholesaling	Marketing costs: Retailing	Retail price 3/
			Cents			
Orange juice, frozen concentrated (12-oz. can):						
1982	46.3	18.7	3.4	13.6	24.1	106.1
1983	44.0	20.1	3.5	13.3	23.5	104.4
1984	49.0	32.7	3.5	13.2	23.2	121.6
1985	61.9	18.5	3.5	17.2	30.5	131.6
1986	39.6	23.2	3.8	17.6	31.4	115.6
1987	42.5	32.2	3.9	13.0	23.2	114.8
1988	51.9	38.1	3.9	15.4	27.4	136.7
1989 9/	56.0	29.0	4.0	18.1	32.3	139.4
1990 10/	55.8	45.3	4.1	20.5	36.4	162.1
Tomatoes, California (303 can):						
1982	4.9	37.2	5.0	1.5	6.4	55.0
1983	5.1	30.5	5.1	2.3	9.6	52.6
1984	4.9	29.6	5.2	2.4	10.4	52.5
1985	4.9	29.3	5.3	2.3	9.7	51.5
1986	4.8	27.7	5.3	2.6	11.0	51.4
1987	4.6	30.0	5.4	2.0	8.7	50.7
1988	4.4	31.1	5.4	2.4	10.3	53.6
1989 9/	4.6	31.7	5.6	2.8	12.8	57.5
1990 10/	5.0	32.3	5.7	3.2	13.7	59.9

1/ Payment for the quantity of farm product equivalent to the retail unit minus imputed value of byproducts, computed from average grower prices. 2/ Costs are for truck shipment. 3/ U.S. average retail prices except as noted. Prices of fresh produce weighted by quantities marketed. 4/ Prices include some packing costs, since many growers may grade, wash, and bag potatoes. 5/ Selected eastern markets. 6/ Includes picking costs. 7/ Value in the field. 8/ Contract price for cutting, packing, hauling, cooling, and selling. 9/ Revised. 10/ Preliminary.

prices, resulting in no change in farm value. Price increases resulted from higher prices for imported orange juice concentrate and from marketing costs. Over the past 3 years, charges for processing made up 41 percent of the farm-to-retail price spread. Retailing equaled 35 percent of the price spread. Wholesaling charges were about 20 percent, and transportation costs were about 4 percent. Packaging represents a major cost of processing, but automated operations minimize the labor cost of concentrated orange juice processing.

Bread

The average retail price of white pan bread in 1990 was 69.5 cents per pound, 2.9 cents higher than in 1989 (table 15). This price is the average of monthly prices reported by the U.S. Bureau of Labor Statistics.

Table 15--White bread: Retail price, farm value of ingredients, farm-to-retail price spread, and farm value share of retail price per 1-pound loaf

Year	Retail price	Farm value of ingredients: Wheat 1/	Farm value of ingredients: Other farm ingredients 2/	Farm value of ingredients: All ingredients	Farm-to-retail spread	Farm value share: Wheat	Farm value share: All ingredients
	Cents					Percent	
1970	27.7	2.6	0.8	3.4	24.3	9	12
1971	28.5	2.6	.9	3.5	25.0	9	12
1972	28.2	2.9	.9	3.8	24.4	10	13
1973	31.5	4.1	1.4	5.5	26.0	13	17
1974	39.3	5.4	2.5	7.9	31.4	14	20
1975	41.0	4.5	2.3	6.8	34.2	11	17
1976	40.2	3.8	1.7	5.5	34.7	9	14
1977	40.5	2.7	.7	3.4	37.1	7	8
1978	41.7	3.3	.7	4.0	37.7	8	10
1979	46.7	4.1	.8	4.9	41.8	9	10
1980	50.9	4.5	.8	5.3	45.6	9	10
1981	52.5	4.7	.8	5.5	47.0	9	10
1982	53.2	4.4	.6	5.0	48.2	8	9
1983	54.2	4.5	.7	5.2	49.0	8	9
1984	54.1	4.3	.8	5.1	49.0	8	9
1985	55.3	4.1	.7	4.8	50.5	7	9
1986	56.5	3.5	.5	4.1	52.5	6	7
1987	54.7	3.3	.5	3.8	50.9	6	7
1988	61.3	4.1	.7	4.8	56.5	7	8
1989	66.6	4.8	.7	5.5	61.1	7	8
1990	69.5	3.7	.7	4.4	65.1	5	6

1/ Payment to farmers for the quantity of wheat (approximately 0.86 pound) required to produce the flour for a 1-pound loaf of white bread, minus the value of millfeed byproducts. Based on average farm prices for hard winter and spring wheat in 11 States producing these wheats through 1982; all wheat prices used beginning in 1983. 2/ Value for lard, shortening, granulated sugar, and nonfat dry milk through 1976. Value for 1977 forward is for lard, soybean oil, high-fructose corn syrup, corn syrup, and soy-whey blend.

The farm value of wheat, at 3.7 cents, was 1.1 cents lower in 1990 than in 1989. The farm value represents the payment to farmers for the quantity of wheat (approximately 0.86 pound) required to produce the flour for a 1-pound loaf of bread. The payment is computed from the average farm price for all wheat. A deduction is made for the value of millfeed, a byproduct of milling the wheat. The value of the millfeed ranges from 15 percent to 20 percent of the value of the wheat, depending on the flour-milling extraction rate, the price of flour, and the price of millfeed.

Other farm-derived ingredients, including lard, soybean oil, high-fructose corn syrup, and soy-whey blend, contributed 0.7 cent to a total farm value of 4.4 cents. Farm value of all ingredients was 6 percent of the retail price spread in 1990, down from 8 percent for 1989. Thus, the farm-to-retail spread--consisting of wheatmilling, breadbaking, and distribution costs--was nearly all of the retail bread price.

Sugar

Because of the stability that the price-support program for sugar provided, retail sugar prices, together with the farm value and price spreads, were relatively stable in the 1980's. In crop year 1989/90, the domestic raw sugar price increased about 0.8 cent per pound (3.6 percent) and the refined sugar price rose about 2.3 cents per pound (8 percent). These increases resulted in slightly higher farm values. The

processing and refining price spread also widened, as tight supplies of refined beet sugar and irregular arrivals of imported cane sugar caused prices to be bid upwards.

The 1989/90 farm value of a pound of sugar was 14.9 cents, about 2 percent higher than a year earlier (table 16). The farm value is based on the season average prices growers received in the United States for sugarcane and sugar beets, which are based on raw and refined sugar prices. The farm value accounted for 38 percent of the retail price of sugar, down about 1.5 percentage points from the previous year.

The farm-to-retail price spread was about 25 cents in 1989/90, up 2 cents from the previous year. This increase was due entirely to the processing and refining component of the spread, which rose to about 19 cents. This component is the difference between the farm value and an average effective wholesale price for sugar packed in 5-pound bags. The processing and refining component covers all the functions of transporting sugarcane and sugar beets to processing plants, processing sugarcane and refining raw cane sugar, processing sugar beets, and selling sugar to wholesalers.

The wholesaling and retailing spread, the difference between the average retail price and average wholesale price for sugar was estimated to be 5.6 cents per pound in 1989/90, down slightly from the previous year. While prices rose, wholesale prices rose even more. The wholesaling and retailing spread includes intercity transportation and wholesaling and retailing charges.

Food Industry Costs, Profits, and Productivity

Many factors influence how much the food industry charges for its services. Food industry input costs, profits, and productivity largely determine how much the price of food increases after it leaves the farm.

Prices of Marketing Inputs

Increases in farm-to-retail price spreads mainly reflect rising costs that food industry firms face. These costs include wages and salaries of workers and prices of many supplies and services that marketing firms bought from other parts of the economy. ERS maintains a food marketing cost index (FMCI) for monitoring and analyzing changes in variable operating costs incurred in processing, wholesaling, and retailing foods. The FMCI consists of hourly earnings of workers and price indexes of various marketing inputs, weighted by the share of each input in total operating costs. The FMCI is not a substitute for more conventional measures of marketing costs. However, the behavior of the index at least partially

Table 16--Sugar: Farm value, price spreads, and retail price

Item	Crop year beginning October					
	1984/85	1985/86	1986/87	1987/88	1988/89	1989/90
	Cents per pound					
Farm value 1/	13.4	13.3	13.6	14.0	14.6	14.9
Processing and refining spread 2/	15.9	14.6	14.4	14.1	16.9	19.1
Wholesaling and retailing spread 3/	5.5	6.1	5.6	6.0	5.9	5.6
Retail price 4/	34.8	34.0	33.6	34.1	37.4	39.6

1/ Based on season average prices continental U.S. sugar producers of sugarcane received in Louisiana and Florida and for all sugar beets. 2/ Difference between the farm value and an average of effective wholesale prices. 3/ Difference between the retail price and the wholesale price. 4/ Average of Bureau of Labor Statistics' monthly retail prices for sugar sold in 33-80-ounce packages.

indicates changes in operating costs of the food marketing sector. The index does not account for changes in productivity and profits.

The largest component of the index (45 percent) is labor costs. Food containers and packaging materials (15 percent), transportation rates (11 percent), and energy costs (8 percent) complete the list of leading cost components of the index. Other cost components include advertising, maintenance and repair services, insurance, short-term interest, rent, and miscellaneous supplies and services.

In 1990, the FMCI rose 3.3 percent, about the same increase as in 1989. Prices rose for most inputs required in food processing and distribution. Increases were largest for energy to operate stores and plants, advertising rates, taxes and insurance, and various business services. Interest rates on short-term credit declined, moderating the rise in the overall index (table 17). Because we assume that businesses must recover increases in variable costs, the rise in the FMCI partially explains the observed increase in the farm-to-retail price spread and food prices at retail. The smaller rise in the FMCI than in the farm-to-retail spread in 1990 indicates that other factors are affecting marketing charges. These factors could include: greater use of some inputs, such as labor, per unit of output; rising fixed costs, such as asset depreciation and interest on long-term debt; higher profits; lower productivity; and consumer demand.

Labor Compensation

Low unemployment rates and slightly higher inflation have given an upward push to labor compensation in the past 2 years. The labor cost index, the largest component of the FMCI, rose 3.6 percent in 1990. The index is computed from changes in workers' hourly earnings and a factor for wage supplements. However, the labor cost index does not reflect lump-sum payments that many workers have received, particularly in food retailing, in lieu of wage increases. Lump-sum payments are attractive to both labor and management because workers get a pay raise, but the basic wage rates remain the same. The latter is important to retailers because some compensation, such as overtime and vacation pay, is based on the basic wage rates. Greater use of part-time workers, who usually earn less than full-time workers, has likely held down the rise in hourly earnings in food retailing.

Hourly earnings of workers increased 2.7 percent in food manufacturing and in food wholesaling in 1990. Hourly earnings of foodstore workers rose 3.1 percent. The rise for foodstore employees was the largest since 1983 (table 18).

Wage supplements, the other component of the labor index, increased because of rising health insurance premiums, pensions, and Social Security taxes paid by employers. Social Security payroll taxes for employers went up a large amount because of an increase in the maximum amount of taxable wages from $48,000 to $51,300, and a rise in the tax rate on wages from 7.51 percent to 7.65 percent. Health insurance benefit costs, which have skyrocketed in recent years, increased because of the rising cost of medical care. In 1990, the CPI for medical services increased 9.7 percent.

Another measure of the change in the cost of labor is the Employment Cost Index (ECI), a quarterly series that the Bureau of Labor Statistics publishes. The ECI has several advantages in measuring labor cost changes over the average hourly earnings that are the basis of the FMCI. The ECI includes employers' cost of employee benefits and lump-sum payments, a growing compensation practice in recent years. Changes in wages and salaries are based on wage rates (rather than on average earnings) that eliminate the effect of shifts in the occupational mix of employment. Changes in the proportion of full-time and part-time workers in food retailing probably have caused average earnings both to increase at a slower rate than the ECI series and to understate the change in the price of labor.

The ECI for foodstores rose 4.6 percent for the year December 1989 to December of 1990 (table 19). This rise in worker compensation costs was larger than the December 1988 to December 1989 gain (3.6 percent). The compensation cost increase in 1990 reflected a wage and salary gain of 4 percent, up from 2.7 percent for the 12 months ending in December of 1989. Compensation costs rose more than wages and salaries in 1990 because benefit cost increases were much greater than gains in wage rates. Though

Table 17--Price indexes of food marketing costs 1/

Year	Labor, hourly earnings and benefits				Packaging and containers							Transportation services
	Total	Processing	Wholesaling	Retailing	Total	Paper boxes and containers	Metal cans	Paper bags and sacks	Plastic packaging	Glass containers	Metal foil	
						1967 = 100						
1968	106.5	105.9	106.7	107.0	96.3	95.9	104.4	101.0	78.4	107.5	100.2	102.0
1969	113.7	112.7	113.5	114.8	99.5	99.4	107.1	103.6	79.9	114.7	105.5	105.0
1970	122.5	121.2	125.1	122.6	103.6	101.1	113.1	108.0	86.0	120.3	106.3	114.3
1971	131.9	130.9	131.9	133.0	106.6	102.4	123.8	109.7	81.8	131.6	106.4	128.5
1972	143.3	134.0	143.7	146.4	110.4	105.5	131.8	113.6	82.9	135.1	106.1	132.5
1973	154.2	151.3	153.7	157.3	117.3	115.1	138.5	121.6	86.4	138.9	106.0	135.2
1974	168.7	164.3	167.4	173.7	149.7	152.2	170.3	144.9	129.6	155.5	113.0	156.3
1975	187.4	184.1	182.3	192.9	174.4	170.3	200.2	161.6	170.8	181.8	116.6	176.9
1976	203.8	200.1	197.6	210.3	184.8	176.2	212.1	170.0	188.1	195.4	127.1	194.4
1977	222.4	217.6	217.8	229.4	192.8	176.5	231.4	176.7	193.6	214.4	140.0	205.1
1978	244.4	237.7	239.3	254.0	204.7	179.6	263.8	186.5	192.1	244.4	159.3	220.5
1979	265.8	257.9	260.4	276.1	228.4	202.1	293.0	209.7	216.9	261.1	175.6	251.3
1980	292.6	283.3	283.5	306.4	261.5	234.6	325.7	236.5	238.5	292.7	184.1	296.8
1981	321.3	309.2	309.5	338.6	280.9	258.2	345.8	258.9	262.5	328.6	203.3	345.9
1982	342.7	330.0	335.1	359.3	275.1	254.9	363.6	264.4	200.0	355.7	213.2	371.1
1983	356.8	341.9	358.1	371.1	280.7	251.0	374.3	265.4	226.2	352.4	214.0	374.5
1984	365.5	350.2	371.1	378.3	303.5	264.0	397.3	290.9	273.1	360.8	226.9	391.7
1985	363.0	357.9	373.5	363.5	312.1	271.6	416.9	294.7	274.4	380.0	213.8	393.9
1986	359.4	363.4	376.3	347.9	317.4	269.1	430.1	307.9	274.8	398.0	209.3	391.7
1987	361.2	370.2	384.2	341.7	329.8	288.0	433.0	331.3	280.2	402.0	222.1	385.0
1988	368.9	380.5	393.9	349.5	350.7	308.1	442.3	372.2	305.7	398.9	266.9	403.5
1989	379.4	391.1	409.2	354.5	364.6	323.7	443.2	409.2	313.2	409.9	274.4	404.9
1990	393.1	404.9	421.5	368.8	367.6	323.9	455.0	413.0	307.1	427.3	258.4	411.3

See footnote at end of table.

--Continued

Table 17--Price indexes of food marketing costs 1/--Continued

Year	Advertising	Fuel and power: Total	Fuel and power: Electric	Fuel and power: Petroleum	Fuel and power: Natural gas	Communications, water, and sewage	Rent	Maintenance and repair	Business services	Supplies	Property taxes and insurance	Interest, short-term	Total marketing cost index
						1967 = 100							
1968	102.5	99.7	100.9	101.9	92.7	100.8	104.4	105.8	105.0	102.1	109.2	115.5	103.5
1969	107.5	100.5	101.8	102.4	93.2	102.8	109.4	113.7	109.9	102.8	118.3	153.2	109.2
1970	109.6	106.1	105.8	106.5	103.6	105.1	115.4	122.3	115.6	106.5	130.4	150.9	116.1
1971	108.7	112.3	113.6	110.3	108.0	111.3	121.7	131.5	123.5	108.7	141.9	100.0	123.0
1972	113.2	118.4	121.5	113.3	114.1	117.8	126.3	137.9	128.2	119.9	153.3	92.6	130.5
1973	118.2	133.1	129.3	139.7	126.7	120.8	131.1	146.7	133.3	113.4	158.4	159.5	139.4
1974	124.2	198.9	163.1	272.2	162.2	126.3	145.9	164.3	146.8	145.1	162.9	192.6	159.8
1975	136.9	236.1	193.4	309.4	216.7	131.8	167.0	182.2	159.6	169.9	180.1	123.7	178.8
1976	152.8	264.5	207.7	336.9	286.8	138.4	174.9	196.1	171.3	181.3	194.5	104.7	193.6
1977	166.3	310.6	232.9	384.1	388.0	142.6	185.0	209.2	182.5	188.9	219.0	109.8	209.2
1978	181.3	331.7	250.6	398.1	428.7	147.5	199.2	226.9	195.2	197.8	237.3	156.4	227.0
1979	197.4	418.2	270.3	574.6	544.8	148.7	216.4	249.7	211.0	224.3	246.9	213.5	252.2
1980	214.5	563.2	321.6	850.6	724.8	153.9	235.0	277.1	230.6	259.3	270.2	240.3	286.0
1981	234.9	669.2	367.9	1,056.2	826.3	168.7	255.0	304.0	254.2	283.8	294.0	288.8	317.5
1982	260.1	705.1	406.1	1,012.1	990.3	186.7	264.3	325.1	277.1	289.1	309.9	232.6	334.0
1983	280.2	705.1	417.9	895.9	1,155.6	199.6	260.6	338.2	291.9	286.5	327.5	174.0	343.0
1984	300.5	712.5	440.0	880.4	1,162.6	215.5	261.3	350.3	306.1	288.3	343.7	198.4	356.2
1985	320.2	700.0	453.5	821.5	1,158.2	224.9	262.9	360.3	321.9	287.9	362.0	157.2	358.6
1986	339.7	590.2	457.9	499.8	1,096.9	236.1	267.0	368.5	334.1	282.7	382.3	125.1	354.9
1987	361.1	596.7	450.5	561.4	1,049.0	238.4	262.3	382.6	346.1	286.8	399.6	132.9	360.4
1988	384.7	578.2	453.3	502.0	1,042.1	241.3	265.3	395.9	371.4	305.6	419.9	150.3	371.8
1989	410.4	619.4	468.9	592.1	1,070.9	247.3	269.8	410.7	388.3	321.4	439.7	172.1	384.8
1990	432.9	671.4	477.7	744.8	1,071.0	253.1	274.2	426.7	404.7	321.1	462.2	155.4	397.5

1/ Indexes measure changes in employee wages and benefits and in prices of supplies and services used in processing, wholesaling, and retailing U.S. farm food purchased for consumption at home.

Table 18--Average hourly earnings of production and nonsupervisory employees of food industries

Year	Manufacturing, food and kindred products	Wholesale trade, groceries, and related products	Foodstores	Eating and drinking places
		Dollars per hour		
1977	5.37	5.43	4.77	2.93
1978	5.80	5.92	5.23	3.22
1979	6.27	6.39	5.67	3.45
1980	6.85	6.96	6.24	3.69
1981	7.44	7.57	6.85	3.95
1982	7.92	8.25	7.22	4.09
1983	8.19	8.70	7.51	4.27
1984	8.39	9.03	7.64	4.26
1985	8.57	9.22	7.35	4.33
1986	8.75	9.30	7.06	4.35
1987	8.94	9.52	6.95	4.42
1988	9.12	9.79	7.01	4.57
1989	9.38	10.16	7.16	4.75
1990	9.63	10.44	7.38	4.97

Source: U.S. Department of Labor, Employment and Earnings.

Table 19--Changes in the Employment Cost Index for workers in food retailing

Period	Employment Cost Index for--			
	Total compensation costs	Wages and salaries	Total compensation costs	Wages and salaries
	Percentage change for 3-months ended		Percentage change for 12-months ended	
1987:				
December	1.1	0.9	--	--
1988:				
March	.8	.6	--	--
June	.5	.5	--	--
September	.3	.4	2.8	2.5
December	1.1	.8	2.8	2.4
1989:				
March	1.6	1.0	3.6	2.8
June	.2	0	3.3	2.2
September	.8	.4	3.8	2.2
December	.9	1.3	3.6	2.7
1990:				
March	1.5	1.1	3.4	2.8
June	1.4	1.5	4.6	4.3
September	1.1	.8	4.9	4.7
December	.7	.7	4.6	4.0

-- = Not available

Source: U.S. Department of Labor, Bureau of Labor Statistics.

not reported separately, the increase in benefit costs probably was about 6.5 percent in 1990, or 1.6 times the rise in the wage rate of foodstore workers.

Most major collective bargaining agreements in the food industry in 1990 provided wage-rate increases. Since the agreements are usually for a period of years, terms of the settlements are an important indicator of future changes in labor costs. A sampling of negotiated contracts reveal a broad range in wage increases and other terms among groups of workers in the various regions of the country.

For instance, after rejecting a tentative agreement and failing to approve a strike vote, 8,000 employees of foodstore chains in Kentucky and southern Indiana were obligated to accept the rejected agreement. The 3-year contract provides an 80-cents-per-hour wage increase for full-time, top-rated grocery clerks and meatcutters over the term of the contract. Their respective wage rates prior to the settlement were $10.32 and $12.55 per hour. The accord also increased employer monthly contributions to the health and welfare trust fund from $170 per employee to about $280 by the end of the contract. Health care costs are the single most difficult issue between workers and employers and were the cause of the dispute between the two parties.

In the largest settlement, 26,000 grocery-store clerks in New Jersey, upstate New York, and Pennsylvania agreed to a 3-year contract that gave them a $25-per-week wage increase (about 5 percent) followed by $20-per-week increases the second and third year of the contract. The weekly salary for full-time clerks at the top of the wage progression was $495 under the previous contract. Employers also agreed to establish a new comprehensive medical plan for employees. It is designed to provide improved benefits for seriously ill persons, while containing costs for routine medical services and requiring employees to pay more of the first dollar costs.

In the Dallas-Ft. Worth, Texas, area, 5,400 clerks and the employer agreed to a 3-year contract that gives them a 75-cents-per-hour wage boost (about 7.2 percent) over the contract term. In addition, a two-tier wage scale was adopted, with a lower rate of pay for new hires. Entry level pay for newly hired full-time clerks was set at $4 per hour in 1990, increasing to $4.25 in 1991, and to $8.60 by the end of the contract. The contract also provides several other provisions affecting newly hired grocery clerks: They will be paid straight time for work on Sundays and holidays for the first 2 years of employment; and newly hired clerks will receive a less comprehensive package of health and welfare benefits for the first 3 years of employment.

More than 15,000 employees of the three major food chains in the Denver, Colorado, area negotiated pay increases to be implemented over a 3-year period. Clerks at the top of the pay scale received a 60-cents-per-hour wage increase in the first year and 25-cent increases in the second and third years, bringing their pay to $12.60 an hour. However, meat cutters received an 80-cents-per-hour wage increase in the first year and 45-cent increases the second and third years, raising their pay to $14.28 per hour over the contract term. Other terms included minimum bonuses of 20 cents per hour the first year, and unspecified amounts in the other 2 years. The companies will also increase their contributions to the health and welfare fund, and will grant unpaid family care leave to employees for up to 6 months within a 2-year period with no loss of job security.

Overall, labor settlements in food retailing last year provided pay raises and benefit increases to most workers that will probably boost labor costs. However, through an assortment of changes in labor use and compensation, the rise in average hourly earnings of foodstore workers, as measured by the U.S. Department of Labor, was held to 3.6 percent in 1990. This was accomplished through lower wages for new workers, reduced overtime pay, changed work rules to allow lower paid workers to do additional jobs in stores, and employment of more part-time workers.

Labor contracts that increased wages and benefits of workers were also negotiated in the food processing industry in 1990. Employees of a large manufacturer of bakery products received a pay increase of 40 cents per hour for each year of the contract. The company also increased its payment for the health and welfare fund, and raised the monthly pension for retired employees.

In the meatpacking industry, where there has been intense worker-management disagreement over employee compensation, 950 hog slaughtering and processing workers in Minnesota negotiated a 2-year contract, the first contract since a work stoppage in 1985-86. The contract provides hourly wage increases of 15 cents each year, bringing base pay to $11.15. Other terms include a new employee health care contribution by the company, higher pension benefits for future retired workers, and strengthening of contract language dealing with the use of seniority for bidding on job vacancies.

In the sugar processing industry, 1,200 employees in eastern Oregon and Idaho signed a 3-year contract that pegs wage increases to health care costs, the major issue in the negotiations. Workers will receive 4-percent wage increases in the first and second years of the contract, and a 5-percent wage increase in the third year. The actual percentage change for the second and third years will be adjusted 0.5 percentage point up or down depending on whether health care claims are above or below the previous year. Other terms include a doubling of the maximum lifetime medical benefit and reduced eligibility for early retirement without a reduction in benefits.

Packaging, Supplies, and Services

Prices increased in 1990 for most principal categories of inputs that the food industry bought. Fuel and power rates averaged 8.4 percent higher, mostly due to a sharp rise in petroleum prices following the embargo of crude oil from Iraq and Kuwait. Electric rates rose only 2 percent, and natural gas rates were unchanged.

The index of prices paid for food containers and packaging materials rose less than 1 percent in 1990. Prices for paperboard shipping boxes and other paper products were nearly stable, contributing most to the small rise in the packaging index. Costs of plastic packaging went down 2 percent in 1990. Prices of metal cans, which were stable in 1989, rose 2.7 percent in 1990, and glass container prices rose 4.2 percent.

A price index of supplies that food processors and retailers used averaged about 5 percent higher in 1990. This index is based on producer prices of motor vehicle supplies, chemicals, cleaning materials, and numerous other items. Prices for most services also continued to increase last year. Advertising rates advanced nearly 6 percent, and business services, such as accounting and printing, went up 4 percent. Property taxes and insurance, a rapidly rising cost in recent years, advanced about 5 percent in 1990.

Lower interest rates tempered the rise in marketing costs. Short-term rates, measured by 4- to 6-month commercial interest rates, averaged 9 percent lower in 1990 than in 1989.

Transportation Rates

The transportation cost index, representing railroad freight rates, advanced by only 2 percent in 1990. Most foods shipped by railroad are canned and bottled products. Some meat and fresh fruit and vegetables are shipped in truck trailers on flat cars (TOFC), but information on these charges is not available. TOFC shipments of fresh fruit and vegetables declined about 6 percent during 1990, but remained at about 5 percent of total produce shipments. A slightly larger quantity of produce is shipped in rail cars.

Nearly 90 percent of fresh produce is transported by truck. Competition among different groups of truckers, including individuals who own and operate trucks, trucking companies, and companies that own trucks to distribute their own products but haul produce on return trips, have held down truck rates.

Operating costs of trucks hauling produce, as reported by USDA's Office of Transportation, rose 7 cents per truck mile in 1990. Truckers experienced the largest cost increases in fuel (3.3 cents) and wages (2 cents). Fuel and labor costs accounted for about half of total operating costs. Truck insurance and maintenance expense also went up last year.

Although costs were higher, truck rates for shipping fresh produce crept up moderately. For example, the rate for shipping apples from Washington to New York City averaged $3.36 per box in 1990, 1.5 percent

higher than in 1989. Truck rates averaged $3.23 per box for citrus fruit and vegetables in 1990, only 0.9 percent higher than in 1989 (table 20). The rate for lettuce declined slightly. As large numbers of refrigerated semitrailers are added to the fleet, slightly less than 20,000 in 1990, competition among truckers has intensified, moderating rate increases.

Financial Ratios

Two financial ratios are useful in evaluating the profitability of the food industry: profit margin and return on stockholder equity. The profit margin is net income as a percentage of sales. It measures the portion of the sales dollar left after paying all expenses, including the cost of food products. The profit margin helps explain the importance of profits compared with costs that, together, make up the consumer food dollar. Return on stockholder equity, which reflects the earning power of the owner's investment, shows food industry profitability compared with that of other industries.

The after-tax profit margin of food and tobacco manufacturers averaged 4 percent of sales in 1990, down from 4.2-percent in 1989, based on data compiled by the U.S. Bureau of the Census. Returns on stockholders' equity also slightly declined to 16.1 percent last year (table 21). However, returns on equity for the food and tobacco industry were higher than the 13.3-percent average for all manufacturers of nondurable products. The margin squeeze for food manufacturers last year is attributed partly to a huge reorganization expense of one company in the fourth quarter.

Table 20--Trucking costs and rates for fresh fruit and vegetables, selected items and routes, annual average

Year	Truck cost for fleet operators 1/	Truck rates by commodity and origin and destination 2/: Lettuce 3/, California to New York City	Citrus and vegetables, southern California to New York City	Apples, Washington State to New York City
	Dollars per mile	Dollars per box		
1980	0.96	3.36	2.77	3.09
1981	1.08	3.45	2.77	3.25
1982	1.11	3.62	2.91	3.20
1983	1.13	3.62	2.98	3.41
1984	1.15	3.65	3.18	3.19
1985	1.17	3.62	3.06	3.20
1986	1.14	3.75	3.16	3.21
1987	1.16	3.83	3.23	3.28
1988	1.18	3.69	3.14	3.30
1989	1.23	3.76	3.20	3.31
1990	1.31	3.74	3.23	3.36
		Percent		
Change, 1980-90	36.5	11.3	16.6	8.7

1/ Truck costs developed by Office of Transportation, USDA. 2/ Truck rates are the average rates reported by Agricultural Marketing Service, Market News Service, USDA, for the first week of the month. Rates per truck were converted for 1980 to 1983 at: Lettuce, 800 boxes/load; citrus fruit and vegetables, 1,000 boxes/load; and apples 900 boxes/load. Beginning in 1984, rates were converted at 850 boxes/load of lettuce from Salinas, CA; 860 boxes/load for lettuce from Imperial Valley, CA; and 1,000 boxes/load for apples. 3/ January to April: Imperial Valley, CA, to New York City; May to December: Salinas, CA, to New York City.

Table 21--Profit margins of food manufacturers and retail food chains, industry averages

Year and quarter	Food manufacturers 1/			Retail food chains 2/		
	After-tax profits as a percentage of--					
	Sales	Stockholder equity	Assets	Sales	Stockholder equity	Assets
	Percent					
1980	3.4	14.7	7.1	.9	13.7	4.5
1981	3.1	13.6	6.5	1.0	13.9	4.7
1982	3.1	13.0	6.3	.9	12.7	4.4
1983	3.3	13.3	6.0	1.1	13.6	4.9
1984	3.3	13.3	6.0	1.4	17.3	6.0
1985	4.1	15.3	6.6	1.3	14.5	5.3
1986	4.2	16.2	6.3	1.1	11.9	4.4
1987	4.6	17.5	6.8	.9	12.8	3.6
1988	5.5	20.9	8.1	.9	13.6	3.2
1989	4.2	17.1	5.5	.8	20.7	2.9
1990	4.0	16.1	5.2	1.2	26.6	4.4
1986:						
I	3.6	13.3	5.4	1.2	13.0	4.8
II	4.0	15.9	6.4	1.3	13.8	5.3
III	3.9	15.5	5.9	.7	7.1	2.6
IV	5.2	20.0	7.6	1.2	13.6	5.0
1987:						
I	3.7	13.6	5.1	.7	9.0	2.6
II	4.5	17.4	6.7	1.0	13.2	3.9
III	4.4	17.0	6.7	.7	9.7	2.6
IV	5.7	21.6	8.5	1.4	19.0	5.1
1988:						
I	5.2	19.1	7.5	.7	8.6	2.5
II	6.5	25.0	9.9	1.5	20.7	5.2
III	5.6	21.9	8.6	.8	11.5	2.9
IV	4.7	17.9	6.7	.6	14.3	2.0
1989:						
I	4.1	15.6	5.2	.8	19.1	2.6
II	4.0	16.5	5.4	.9	23.4	3.3
III	3.4	13.9	4.4	.8	18.9	2.7
IV	5.3	22.2	7.0	.9	21.5	3.1
1990:						
I	3.7	14.8	4.7	1.1	24.6	3.7
II	5.2	21.1	6.9	1.3	29.8	4.9
III	5.1	19.6	6.6	.9	20.3	3.4
IV	2.2	9.0	2.9	1.5	31.3	5.6

1/ Data represent aggregate estimates for corporations, based on a sample of company reports. Beginning in 1985, data are not comparable with earlier years because the tobacco industry was combined with food manufacturers. 2/ Data are based on reports from all food retailing corporations having more than $100 million in annual sales, at least 70 percent of which are derived from supermarket operations.
Source: U.S. Department of Commerce.

While the industry average declined, profit margins of many food processors improved last year as a result of declining commodity prices, new product lines, and greater concentration of market share in many packaged food categories. Among 28 companies selling branded food products listed in Forbes magazine's annual industry survey, 13 companies improved their net profit margin in 1990. One company earned the same margin, and 14 earned a smaller margin.

Profit margins of retail food chains averaged 1.2 percent of sales in 1990, up from 0.8 percent a year earlier. The 1990 industry average profit margin was the highest since the mid-1980's. Several factors explain the large increase in the profit margin. In previous years, some food chains took on heavy debt because of buyouts and takeover activities. In the past year, these companies have cut costs and have sold off assets to reduce debt and interest payments that have returned them to more normal profit levels. The industry also has been more efficient through the use of technology for inventory management and merchandising, labor savings at checkouts, energy conservation, and the routing of delivery trucks to stores. Retailers also have been building bigger stores to give greater space to the highest margin products including perishables, service departments, and nonfoods. After-tax profit margins for most leading food chains slightly improved in 1990 (table 22). Kroger, the largest food chain, returned to profitability following an extraordinary drop in profit margin from 1.2 percent of sales in 1988 to a loss of -0.2 percent in 1989. The improvement in the profit margin in 1990 resulted from strong sales during the Christmas season, increased sales of private label lines, which carry higher margins, and a reduction in interest expense.

Table 22--After-tax profits of selected supermarket food chains per dollar of sales, fiscal year or four calendar quarters

Firm	1985	1986	1987	1988	1989	1990
			Percentage of sales			
Ahold NV	--	--	1.12	0.95	1.10	1.39
Albertson's	1.68	1.86	2.14	2.40	2.65	2.84
American Stores	1.11	1.03	1.08	.53	.54	.82
Atlantic & Pacific Tea	.85	.88	1.09	1.27	1.32	1.33
Bruno's Inc.	--	--	--	2.15	2.35	2.60
Foodarama Supermarkets	--	--	.77	.71	-.20	-.16
Food Lion	2.55	2.57	2.90	2.95	2.96	3.09
Giant Food	2.54	1.84	2.78	3.28	3.34	3.55
Hannaford Bros. Co.	1.78	2.09	2.33	2.29	2.46	2.50
Ingles Markets, Inc.	--	--	1.37	1.81	1.76	1.00
Kroger	1.00	.81	1.04	1.20	-.18	.28
Marsh Supermarkets, Inc.	.90	.87	.92	.91	1.09	1.17
Penn Traffic Co.	--	--	.10	-.77	-1.08	-.87
Safeway	1.00	-.07	-.43	-.12	.02	.59
Vons Companies	--	--	--	-.61	-.48	.93
Winn-Dixie	1.34	1.26	1.30	1.41	1.67	1.60

-- = Not available.

Source: The American Institute of Food Distribution Inc., Food Institute Reports, Fair Lawn, New Jersey.

Labor Productivity

Labor productivity declined 0.8 percent during 1990 in the Nation's total business sector, excluding farming, the second consecutive annual drop. Food industry productivity estimates for 1990 were not available at press time. But, productivity of food stores and eating places declined in 1989. In 1990, output of grocery stores declined, as measured by food sales adjusted for inflation, and real sales in eating and drinking places were flat, likely precluding any rise in productivity. Productivity in food retailing and eating places has trended down during the past decade.

Labor productivity in industries that manufacture food has improved substantially. Output per unit of labor in seven food manufacturing industries for which data are available increased 1-5 percent per year over the 1980-88 period (table 23). These increases, in most instances, resulted from increased output and

Table 23--Indexes of output per employee hour in selected food manufacturing industries, retail food stores, and eating and drinking places

	Food manufacturing								
Year	Red meat products	Poultry dressing and processing	Fluid milk	Preserved fruit and vegetables	Grain mill products	Bakery products	Sugar	Retail food stores	Eating and drinking places
					1982 = 100				
1970	68.9	62.3	54.0	73.9	65.9	84.8	95.0	112.1	103.9
1971	70.7	68.0	58.5	77.0	68.9	86.7	93.9	112.7	101.1
1972	75.7	70.1	63.3	78.4	70.6	91.1	100.0	111.8	105.2
1973	73.7	61.7	66.0	86.3	67.5	90.6	106.6	107.2	106.7
1974	75.3	69.4	67.8	85.0	71.4	90.5	103.1	102.7	102.0
1975	75.2	69.9	71.3	86.8	72.1	90.4	104.0	103.4	104.0
1976	83.2	78.5	74.3	92.8	75.3	90.8	106.0	105.5	104.5
1977	89.1	79.6	75.7	92.8	82.6	96.8	110.7	104.7	103.2
1978	88.0	80.7	80.5	96.6	82.8	94.7	108.8	100.5	102.7
1979	90.5	84.5	85.9	91.8	83.5	92.0	114.1	103.0	102.7
1980	95.3	84.2	92.3	93.5	87.0	90.7	110.8	105.1	102.9
1981	96.1	92.6	94.6	91.9	91.6	93.1	109.3	101.7	100.4
1982	100.0	100.0	100.0	100.0	100.0	100.0	100.0	100.0	100.0
1983	103.2	104.8	106.2	102.7	103.7	103.5	109.1	99.4	99.0
1984	104.2	103.8	111.0	104.3	109.8	103.4	110.4	99.5	95.5
1985	106.4	106.0	115.8	105.1	116.5	105.1	116.7	99.5	92.9
1986	104.5	101.5	121.3	109.7	117.2	110.7	121.8	97.1	95.5
1987	105.9	107.7	126.9	108.5	130.2	109.7	139.3	95.9	97.4
1988	108.2	105.1	130.8	109.6	130.7	102.7	138.2	95.4	99.1
1989 1/	--	--	131.9	--	--	--	131.6	91.8	97.4
					Percent				
Average annual change:									
1970-80	3.3	3.0	5.5	2.4	2.8	0.7	1.5	-0.7	-0.1
1980-88	1.6	2.8	4.5	2.0	5.2	1.6	2.8	-1.2	-.5

-- = Not available.
1/ Preliminary. Some historical data were revised.
Source: U.S. Department of Labor, Bureau of Labor Statistics.

a small decline in hours worked. Labor productivity among food manufacturers has increased most in grain milling and fluid milk processing. Productivity has grown erratically for most industries, partly because of fluctuating output and business conditions.

Output per unit of labor among supermarkets has drifted lower since 1980. In 1989, output per employee hour fell 3.8 percent, the largest decline of the decade. However, some store operations have become more efficient because of computer-assisted checkout and data processing systems and new store formats, such as warehouse stores with a limited assortment of products. Warehouse stores provide reduced services and, thus, cut labor requirements, or they foster higher sales per unit of labor. On the other hand, supermarkets have expanded service-oriented operations, such as delicatessens, salad bars, and instore bakeries, in response to consumer demand for saving time in food buying and preparation. Providing the products and shopping convenience that consumers want has added to industry employment and has made productivity gains more difficult. In addition to tailoring products to consumer demand, many supermarkets are trying to make shopping easier and faster by opening more registers at busy times and by extending store hours.

Labor use in food retailing increased 24 percent between 1980 and 1989, based on the latest available U.S. Department of Labor data, and output rose 19 percent, resulting in lowered productivity. As a result of lower productivity, unit labor costs have likely gone up faster than average hourly earnings or workers.

The trend in productivity is similar but not as severe for eating places. Following three annual increases, labor productivity in eating and drinking places declined about 2 percent in 1989, and was 5 percent lower in 1989 than in 1980. Productivity declined since 1980 because hours worked rose 33 percent, but output rose 26 percent.

Food Spending: How It Was Distributed

Food spending for domestically produced food in 1990 represents the retail market value of food purchased by or for civilian consumers. Both the quantities of food bought and the prices paid affected spending levels. The expenditures reported in this section include spending at grocery stores, eating places, and institutions. In this section, food expenditures are broken into two components:

- The farm value is a measure of the payments farmers received for the raw commodities equivalent to food purchased by consumers at food stores and eating places.

- The marketing bill is the difference in dollars between the farm value and consumer expenditures for foods produced on U.S. farms.

Changes in last year's marketing bill can be evaluated by: (1) dividing the total marketing bill into costs of several principal marketing functions, such as processing and retailing, and (2) breaking the bill down into costs of principal inputs, such as labor and packaging.

Most of these estimates are based on secondary data, not on direct measures of consumer food expenditures or actual marketing costs, thereby limiting their accuracy. Thus, they are general indicators, not precise measures, of levels and yearly changes.

Food Expenditures

Consumers spent $441 billion for foods originating on U.S. farms in 1990 (figure 3 and table 24). Because it excluded expenditures for imported food and fishery products, this amount was less than what consumers spent for all food.

About 61 percent of consumers' food expenditures was spent at retail grocery stores on food for use at home. The remaining 39 percent represented the retail value of food served in public eating places, hospitals, schools, and other institutions. Market shares in 1990 were unchanged from 1989.

Figure 3
Distribution of food expenditures
Marketing bill was three-fourths of 1990 food expenditures.

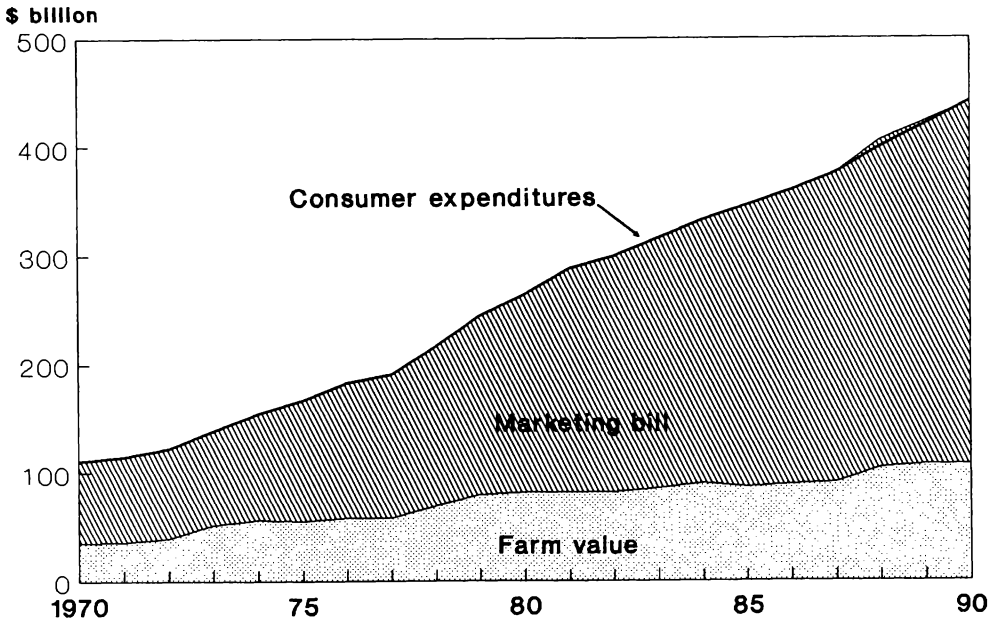

1990 preliminary. Data for foods of U.S. farm origin purchased by or for consumers for consumption both at home and away from home.

Consumer expenditures for domestic farm foods in 1990 rose about 5.1 percent. The increase in spending came largely from higher food prices. The quantity of food purchases likely decreased, based on sales data that the U.S. Bureau of the Census reported. Sales at eating places rose 5 percent in 1990, but when adjusted for the rise in prices, 1990 sales were only 0.3 percent higher than in 1989. Grocery store sales rose 5 percent in 1990, but after adjustment for price increases, sales dropped 1.4 percent. Foodstore sales consist of both food and nonfood items. After adjusting for nonfood sales, spending on domestic farm foods at grocery stores increased an estimated 4.9 percent in current dollars, but declined about 2.2 percent in real dollars, an indicator of reduced food purchases.

Meat products represent the largest share of total consumer food expenditures. Expenditures on meat in 1990 were 28 percent of total food expenditures, compared with 23 percent for fruit and vegetables, the next largest expenditure group (table 25). Because food consumption changes slowly, the proportion of expenditures that meat products and other food groups accounted for has changed little from year to year.

Farm Value

The farm value of food commodities originating on U.S. farms increased about $3 billion in 1990 to $107 billion (table 24). The increase was slightly greater than the average annual increase of the last 10 years. Higher farm prices for beef cattle, hogs, and oil crops accounted for much of the rise in farm value. However, lower prices for poultry and lower cash receipts for fruit and vegetables mitigated the farm value increase. The largest share of the money farmers received for domestic food sales was for meat products. In 1990, the farm value of meat was about 35 percent of the total farm value of foods. The next largest share, 19 percent, was for dairy products. Livestock and dairy producers garnered more than half of the total farm value, but they bought substantial amounts of grain from crop farmers.

The farm value of food commodities represented 24 percent of consumer expenditures for farm foods in 1990, down from 25 percent in 1989. The farm value is a much smaller part of expenditures for food eaten away from home than for food bought at stores, because the cost of preparing and serving food is a huge part of the cost of food eaten away from home. The 1990 farm value accounted for about 16 percent of

Table 24--Marketing bill and farm value components of consumer expenditures for domestically produced foods

Year	Consumer expenditures: Total	Consumer expenditures: At home 1/	Consumer expenditures: Away from home 2/	Marketing bill	Farm value	Farm value share of expenditures
	Billion dollars					Percent
1950	44.0	--	--	26.0	18.0	41
1951	49.2	--	--	28.7	20.5	42
1952	50.9	--	--	30.5	20.4	40
1953	51.0	--	--	31.5	19.5	38
1954	51.1	--	--	32.3	18.8	37
1955	53.1	--	--	34.4	18.7	35
1956	55.5	--	--	36.3	19.2	35
1957	58.3	--	--	37.9	20.4	35
1958	61.0	--	--	39.6	21.4	35
1959	63.6	--	--	42.4	21.2	33
1960	66.9	--	--	44.6	22.3	33
1961	68.7	--	--	45.7	23.0	33
1962	71.3	--	--	47.6	23.7	33
1963	74.0	56.0	18.0	49.9	24.1	33
1964	77.5	58.5	19.0	52.6	24.9	32
1965	81.1	60.2	20.9	54.0	27.1	33
1966	86.9	64.0	22.9	57.1	29.8	34
1967	91.6	66.8	24.8	62.4	29.2	32
1968	96.8	69.5	27.3	65.9	30.9	32
1969	102.6	73.1	29.5	68.3	34.3	33
1970	110.6	78.2	32.4	75.1	35.5	32
1971	114.6	80.6	34.0	78.5	36.1	32
1972	122.2	85.4	36.8	82.4	39.8	33
1973	138.8	98.5	40.3	87.1	51.7	37
1974	154.6	109.5	45.1	98.2	56.4	36
1975	167.0	116.2	50.8	111.4	55.6	33
1976	183.3	127.2	56.1	125.0	58.3	32
1977	190.9	130.8	60.1	132.7	58.2	30
1978	216.9	149.2	67.7	147.4	69.5	32
1979	245.2	169.4	75.8	166.0	79.2	32
1980	264.4	180.1	84.3	182.7	81.7	31
1981	287.7	194.0	93.7	206.0	81.7	28
1982	298.9	196.7	102.2	217.5	81.4	27
1983	315.0	204.6	110.4	229.7	85.3	27
1984	332.0	213.1	118.9	242.2	89.8	27
1985	345.4	220.8	124.6	259.0	86.4	25
1986	359.6	226.0	133.6	270.8	88.8	25
1987	375.5	230.2	145.3	285.1	90.4	24
1988	398.8	242.1	156.7	301.9	96.8	24
1989	419.4	255.5	163.9	315.6	103.8	25
1990 3/	440.8	267.9	172.9	334.2	106.6	24

-- = Not available.

1/ Includes food purchased primarily at retail foodstores. 2/ Includes food purchased at restaurants, fast-food outlets, and other public eating places, and food served in institutions, such as hospitals, schools, and rest homes. 3/ Preliminary. Some historical data have been revised.

Table 25--Consumer expenditures and farm value for major food groups

Item and year	Meat	Fruit and vegetables 1/	Dairy products	Bakery products	Poultry	Grain mill products 2/	Eggs	Other foods 3/	Total
				Billion dollars					
Consumer expenditures:									
1975	48.0	35.6	23.3	18.2	8.6	5.9	4.1	23.3	167.0
1976	55.2	38.8	26.4	18.8	9.1	6.1	4.8	24.1	183.3
1977	59.0	40.8	27.8	18.1	9.6	6.3	4.4	24.9	190.9
1978	69.5	46.3	30.1	21.1	10.9	6.4	4.3	28.3	216.9
1979	80.2	52.5	33.5	23.8	12.6	7.8	4.8	30.1	245.3
1980	83.3	55.5	37.8	26.8	13.3	8.4	5.0	34.3	264.4
1981	86.6	62.8	41.4	29.0	14.7	8.9	5.2	39.1	287.7
1982	91.9	66.7	42.0	30.6	15.1	9.0	5.2	38.4	298.9
1983	97.9	70.0	45.0	31.0	16.3	9.6	5.4	39.8	315.0
1984	101.7	74.7	47.4	33.0	18.4	10.3	5.8	40.7	332.0
1985	103.2	78.5	49.4	34.6	19.9	10.9	6.1	42.8	345.4
1986	106.3	81.6	51.4	36.6	21.2	11.7	6.4	44.4	359.6
1987	110.0	84.7	54.0	37.8	22.8	12.1	6.6	47.5	375.5
1988	117.6	89.3	55.8	41.5	24.7	13.2	6.6	50.1	398.8
1989	121.5	96.0	58.1	43.1	27.4	14.6	6.5	52.2	419.4
1990	124.7	101.7	59.9	47.6	29.9	16.0	6.5	54.5	440.8
Farm value:									
1975	20.6	8.4	10.0	3.0	4.1	1.1	2.2	6.2	55.6
1976	21.6	8.8	11.3	2.6	4.0	1.0	2.6	6.4	58.3
1977	22.0	8.6	11.5	2.3	4.2	.9	2.3	6.4	58.2
1978	28.0	10.0	12.7	2.8	5.1	1.0	2.2	7.7	69.5
1979	31.5	10.9	14.6	3.4	5.5	1.4	2.6	9.3	79.2
1980	30.8	11.7	16.0	3.5	5.9	1.6	2.5	9.8	81.7
1981	31.1	11.8	17.0	3.4	6.1	1.5	2.7	8.1	81.7
1982	31.5	11.5	16.7	3.4	6.0	1.4	2.5	8.4	81.4
1983	31.4	12.9	18.0	3.5	6.6	1.4	2.7	8.8	85.3
1984	32.4	13.5	18.1	3.7	8.0	1.4	3.0	9.7	89.8
1985	30.5	13.3	17.7	3.4	7.9	1.3	2.3	10.0	86.4
1986	30.9	14.6	17.8	2.9	9.0	1.1	2.5	10.0	88.8
1987	32.7	14.3	18.2	2.8	8.1	1.0	2.2	11.1	90.4
1988	33.5	16.2	17.9	3.6	9.9	1.3	2.2	12.2	96.8
1989	34.0	17.8	19.6	4.3	11.4	1.6	2.8	12.3	103.8
1990	37.0	16.6	20.6	3.7	11.1	1.4	2.8	13.4	106.6

1/ Also includes soup, baby foods, condiments, dressings, spreads, and relishes. 2/ Includes flour, flour mixes, cereal, rice, and pasta. 3/ Includes fats and oils, sugar, tree nuts, peanuts, and miscellaneous foods.

expenditures for food consumed away from home, compared with about 30 percent of expenditures for farm foods in foodstores.

Marketing Bill

The marketing bill, the difference between what consumers spent for food and the farm value of the food, amounted to $334 billion in 1990, $19 billion more than in 1989. This increase in the marketing bill accounted for 87 percent of the rise in consumer expenditures.

The 5.9-percent increase in the marketing bill in 1990 was due to higher prices of most inputs and greater use of some inputs, particularly labor. Higher labor costs accounted for about 47 percent of last year's increase in the marketing bill, about the same proportion as in 1989. Much of the remaining increase in the marketing bill occurred in food packaging materials and other costs, including such items as advertising and promotion, taxes and insurance, and professional services.

Marketing costs continued to be the most persistent source of rising food expenditures. Consumer expenditures for farm foods have increased $176 billion since 1980. About $151 billion of this increase consists of marketing charges. Farm value has increased only $25 billion since 1980.

What the Marketing Bill Bought

Developments in last year's marketing bill can be analyzed by looking first at four broad functions that the food industry performs--processing, wholesaling, transporting, and retailing--and then at the specific cost items that add up to the marketing bill.

Costs of the functions performed are different for food bought in foodstores than for meals and snacks purchased for consumption away from home (table 26). About 30 cents of each dollar spent in foodstores paid for the farm value in 1990. Thus, 70 cents paid the marketing bill for food eaten at home.

Table 26--Marketing function components of consumer expenditures

Expenditures and components	1980	1981	1982	1983	1984	1985	1986	1987	1988	1989	1990 1/
					Billion dollars						
Expenditures at foodstores	180.1	194.0	196.7	204.6	213.1	220.8	226.0	230.2	242.1	255.5	267.9
Farm value	65.9	65.4	64.1	66.5	69.5	66.6	67.6	67.5	72.5	77.9	79.8
Marketing bill	114.2	128.6	132.6	138.1	143.6	154.2	158.4	162.7	169.6	177.6	188.1
Processing cost	53.9	60.1	60.9	62.2	64.1	69.5	70.2	72.1	75.6	79.2	83.9
Intercity transportation cost	10.5	11.6	11.9	12.3	12.8	13.3	13.4	14.0	13.8	14.3	15.0
Wholesaling cost	15.7	17.7	20.0	20.5	21.5	22.3	22.5	23.2	24.3	25.3	26.8
Retailing cost	34.1	39.2	39.8	43.1	45.2	49.1	52.3	53.4	55.9	58.8	62.4
Expenditures for eating away from home	84.3	93.7	102.2	110.4	118.9	124.6	133.6	145.3	156.7	163.9	172.9
Farm value	15.8	16.3	17.3	18.8	20.3	19.8	21.2	22.9	24.3	25.9	26.8
Marketing bill	68.5	77.4	84.9	91.6	98.6	104.8	112.4	122.4	132.4	138.0	146.1
Processing cost	12.4	13.6	14.7	15.6	16.7	18.9	20.8	21.8	24.1	24.6	26.4
Intercity transportation cost	2.5	2.7	3.0	3.1	3.2	3.3	3.4	3.6	3.9	4.3	4.6
Wholesaling cost	4.7	5.3	5.9	6.6	7.1	7.5	8.0	8.6	9.5	9.9	10.5
Foodservice cost	48.9	55.8	61.3	66.3	71.6	75.1	80.2	88.4	94.9	99.2	104.6

1/ Preliminary. Data for 1989 have been revised.

Of each dollar spent for food in foodstores, 31 cents paid for processing. Between processor and retailer, another 10 cents was spent for wholesaling and 6 cents for intercity transportation. Finally, retailing charges added the last 23 cents (figure 4). These shares have not changed much over the years.

For each dollar spent for food away from home, 16 cents covered the farm value. Processing costs accounted for 15 cents, transportation charges for 3 cents, and wholesaling for 6 cents. Thus, 60 cents was for food service or the preparing and serving of food eaten away from home.

The food processing and marketing industry is an important part of the American economy. The $334 billion the industry received from consumers in 1990 paid the wages and salaries of millions of employees and paid for all of the other costs of doing business.

Labor: The Largest Cost

Direct labor costs, the largest part of the marketing bill, amounted to about $154 billion in 1990, or 35 percent of food expenditures (figure 5 and table 27). Labor costs consist of wages and salaries, employee benefit costs, such as group health insurance, estimated earnings of proprietors and family workers, and tips for food service. Direct labor costs do not include the costs of labor engaged in for-hire transporting of foods or in manufacturing and distributing supplies that industries used.

Labor costs of the food industry rose about 6 percent in 1990, a larger increase than in 1989. The increase reflected rising employment in the food industry and higher employee compensation. Food retailing employment climbed 3.3 percent, many being part-time, reflecting the continued growth of service departments in supermarkets, such as delicatessens, salad bars, and bakeries. Employment rose 2.3 percent in eating places and 0.3 percent in the food manufacturing industry. The total number of persons employed in the food industry rose about 2.2 percent in 1990, when nearly 12.5 million workers were employed in processing and distributing food. More than half, or about 6.6 million people, were employed in away-from-home eating places in 1990. Foodstores employed 3.3 million people, food processors employed 1.6 million people, and food wholesalers employed about 0.85 million people.

Packaging Costs

Food containers and packaging materials, the second largest food marketing cost, totaled $36 billion in 1990, about 8 percent of total food expenditures. Costs in 1990 rose only 3 percent above 1989 levels, largely reflecting sluggish sales of convenience foods, which require more packaging. Moreover, prices of plastic packaging dropped, while prices of paperboard boxes and food containers held steady.

Paperboard boxes and containers are the largest packaging cost. The food industry spent nearly $14.5 billion, or about 40 percent of total packaging expenses, on paper and paperboard products in 1990. Fiber (cardboard) boxes, the primary container used to ship nearly all processed foods, represented about 33 percent of total packaging expenses. Sanitary food containers, including those for such products as fluid milk, margarine and butter, ice cream, and frozen food, were also almost 33 percent of total packaging expenses. The third-largest paperboard item was folding boxes used for such dry foods as cereal and perishable bakery products.

Metal containers are next in importance, making up about 20 percent of total food packaging costs. Cans have become less important for food packaging because of the increased popularity of glass and plastic bottles, the year-round availability of fresh fruit and vegetables, and the increased use of microwavable dishes for frozen foods.

Costs of plastic containers and wrapping materials are nearly 20 percent of food packaging costs. Plastic is an important source of trays for meat and produce, bottles for milk and fruit juices, jars and tubs for cottage cheese and other dairy products, and flexible wrapping materials, such as polyethylene film for protective covering of baked goods, meat, and produce.

Figure 4
Marketing functions of the food dollar
Processing costs are the largest marketing function for food eaten at home.

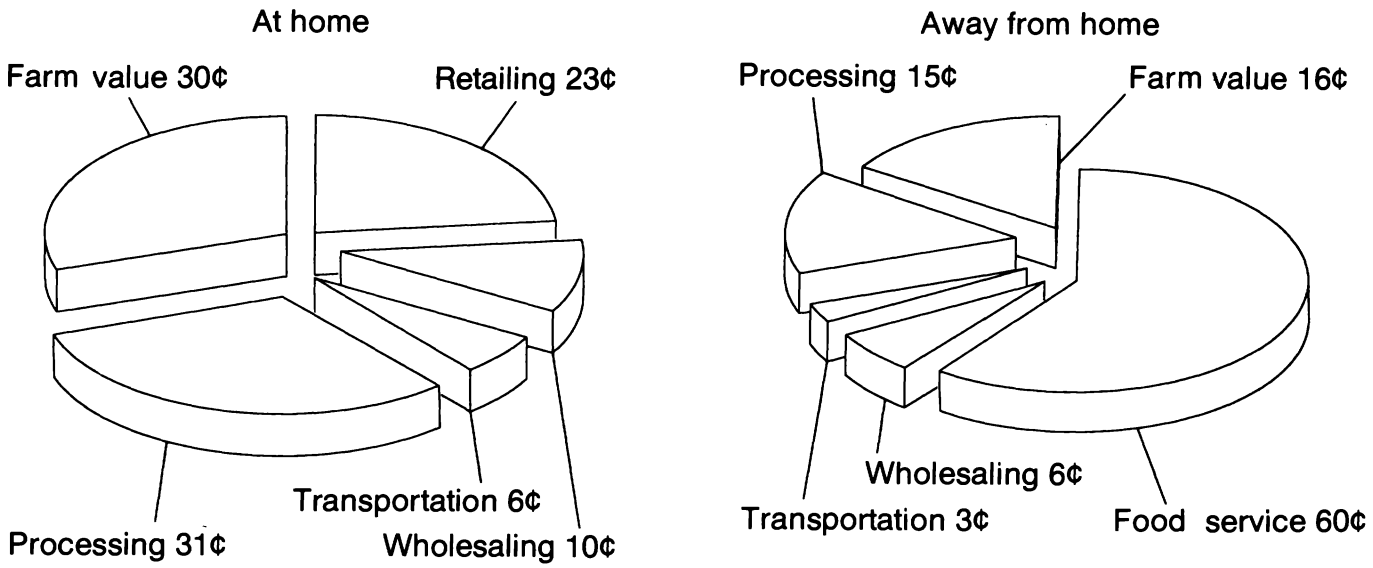

Figure 5
What a dollar spent on food paid for in 1990
About one-third went for food marketing labor costs.

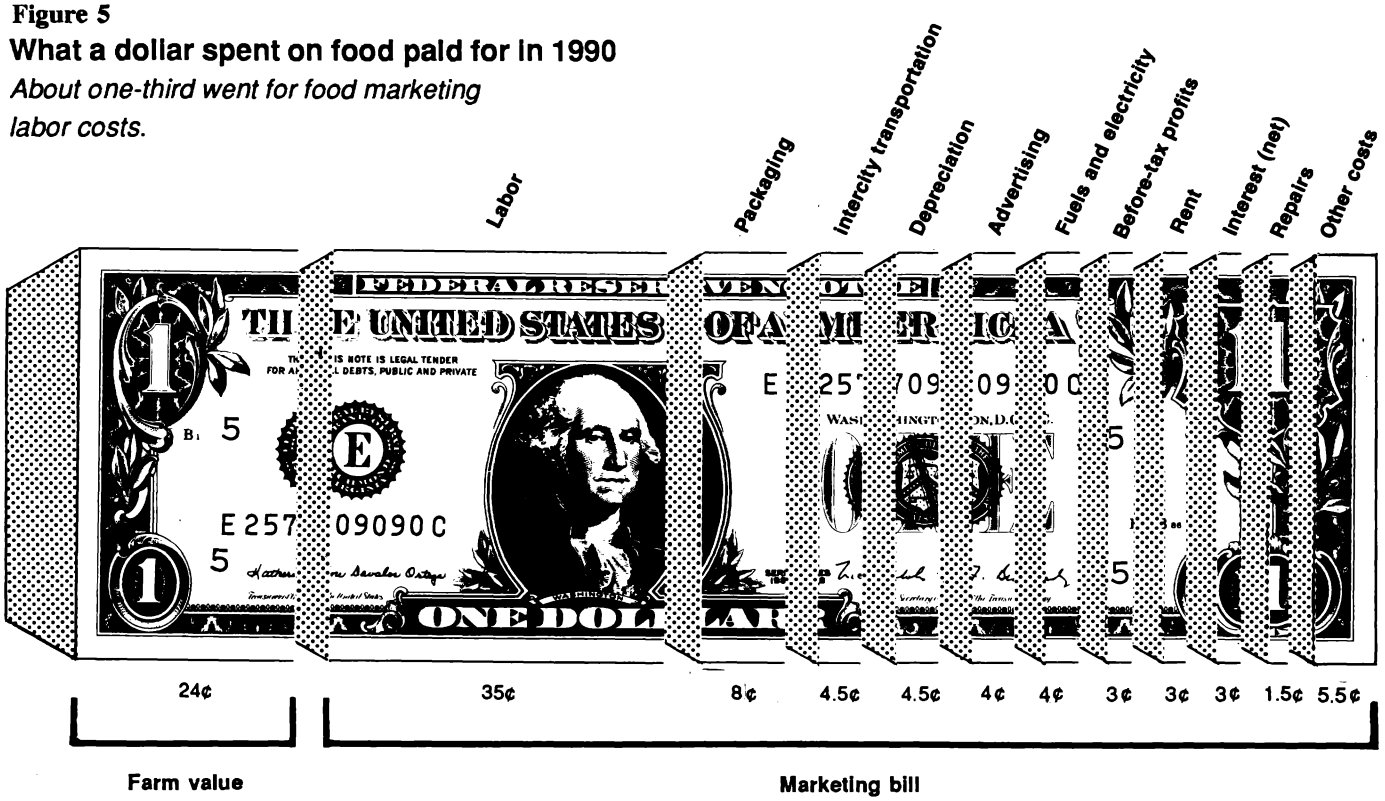

Includes food eaten at home and away from home. Other costs include property taxes and insurance, accounting and professional services, promotion, bad debts, and many miscellaneous items.

Table 27--Components of the marketing bill for domestically produced farm foods

Year	Labor 1/	Packaging materials	Intercity rail and truck transportation	Fuels and electricity	Corporate profits before taxes	Other 2/	Total marketing bill 3/
				Billion dollars			
1967	25.9	7.3	4.3	--	3.4	21.5	62.4
1968	28.0	7.6	4.5	--	3.6	22.2	65.9
1969	30.4	7.9	4.6	--	3.6	21.8	68.3
1970	32.2	8.2	5.2	2.2	3.6	23.7	75.1
1971	34.5	8.5	6.0	2.4	3.9	23.2	78.5
1972	36.6	8.9	6.1	2.5	4.0	24.3	82.4
1973	39.7	9.4	6.4	2.8	5.4	23.4	87.1
1974	44.3	11.8	7.5	3.7	6.1	24.8	98.2
1975	48.3	13.3	8.4	4.6	7.1	29.7	111.4
1976	53.8	14.5	9.1	5.0	7.7	34.9	125.0
1977	58.3	15.1	9.7	6.0	8.0	35.6	132.7
1978	66.2	16.6	10.5	7.1	9.9	37.1	147.4
1979	75.2	18.6	11.8	8.2	10.0	42.3	166.1
1980	81.5	21.0	13.0	9.0	9.9	48.3	182.7
1981	91.0	22.6	14.3	10.0	9.7	58.4	206.0
1982	96.6	23.7	14.7	11.0	9.3	62.2	217.5
1983	102.4	24.7	15.4	11.7	9.6	65.9	229.7
1984	109.3	26.2	15.9	12.5	9.6	68.7	242.2
1985	115.6	26.9	16.5	13.1	10.4	76.5	259.0
1986	122.9	27.7	16.8	13.2	10.3	79.9	270.8
1987	130.0	29.9	17.2	13.6	11.1	83.3	285.1
1988	137.9	32.6	17.8	14.1	11.6	87.9	301.9
1989	145.1	35.2	18.6	15.3	11.8	89.6	315.6
1990	153.8	36.2	19.6	16.3	14.1	94.2	334.2

-- = Not available.

1/ Includes employee wages or salaries and their health and welfare benefits. Also includes estimated earnings of proprietors, partners, and family workers not receiving stated remuneration. 2/ Includes depreciation, rent, advertising and promotion, interest, taxes, licenses, insurance, professional services, local for-hire transportation, food service in schools, colleges, hospitals, and other institutions, and miscellaneous items. Data for 1967-69 also include fuels and electricity. 3/ The marketing bill is the difference between the farm value and consumer expenditures for these foods both at foodstores and away-from-home eating places. Thus, it covers processing, wholesaling, transportation, and retailing costs and profits. Some historical data were revised.

Transportation Costs

Intercity truck and rail transportation costs for farm foods were about $19.6 billion in 1990, making up 4.5 percent of retail food expenditures. Larger food marketings and slightly higher rates boosted costs more than 5 percent last year, the largest increase since 1981. Higher oil prices resulting from the Persian Gulf

crisis boosted diesel fuel prices more than 50 percent in the last half of 1990, causing transportation costs to rise. Diesel fuel accounts for approximately 20 percent of truck transportation costs.

Energy Costs

Last year's energy bill for food marketing came to about $16 billion, making up about 4 percent of retail food expenditures. Costs were moderately higher in 1990, due mainly to the expanded size of the food industry. During 1973-82, fuel and electricity costs in the food industry rose more than 1.5 times the annual rate of other costs, reflecting the dramatic rise in energy prices. However, the overall rise in energy costs was similar to other costs from 1985 to 1990.

This energy bill counted only the costs of electricity, natural gas, and other fuels used in food processing, wholesaling, and retailing, including foodservice at eating places. The energy bill excluded transportation fuel costs, except for those incurred for food wholesaling.

Public eating places and other foodservice facilities incur more than a third of the fuel and electricity costs of food marketing. These energy expenses have risen because of the large growth of the away-from-home food market. Also, away-from-home foodservice has the highest energy costs per dollar of sales, averaging about 3.8 percent.

Food retailing and processing have each accounted for about 25 percent of food marketing's fuel and electricity costs. Energy costs rose compared with other retailing costs in the early 1980's, but have leveled off in the past several years. The major portion of the food retailing energy bill is electricity used to operate refrigeration equipment. Energy costs in food processing, which are about equally split between electric power and natural gas, average 0.7 cent of the retail food dollar.

Higher oil prices resulting from the Persian Gulf crisis had only a limited effect on the costs of processing and retailing foods. Higher oil prices did not significantly affect natural gas and electricity costs. Natural gas is domestically produced, and abundant supplies kept prices at about the same levels in 1990 as in 1989. Electric rates increased less than 2 percent, since oil is not the principal source of energy for generating electric power.

Other Costs Added Up

The major costs just discussed total about 68 percent of the 1990 food marketing bill. The rest of the bill included a variety of other costs (28 percent of the total) and profits (about 4 percent). Although most such costs were small individually, they added to $99 billion. These costs included depreciation, rent, advertising and promotion, repairs, bad debts, contributions, property taxes and insurance, interest, and the nonfood costs involved in providing foodservice in schools, hospitals, and other institutions. Some of these other costs are estimated using data from trade publications, the Internal Revenue Service, and the Bureau of the Census.

The largest of these costs are plants and equipment, rent, and depreciation (about 7 percent of total consumer expenditures), media--television, radio, and newspaper--advertising expenditures (about 4 percent), net interest (about 2.5 percent), and repairs (1.5 percent).

Sufficient data are not available for estimating many individual smaller costs, such as taxes and insurance, for-hire local truck transportation, professional services, and foodservice in schools and institutions. Together, these costs account for about 5.5 percent of the food dollar.

Corporate Profits

Before-tax profits that firms earned from marketing foods of U.S. farm origin were estimated at $14.1 billion for 1990, a 19-percent increase over 1989. Higher food industry sales and larger profit margins in food retailing mainly caused the dramatic jump in industry profits. Multiplying sales for food retailers, wholesalers, manufacturers, and public eating places times profit rates per dollar of sales derived from IRS

data from corporation income tax returns provided the profit estimate. Profits of the food industry last year were about 3 percent of food spending.

Food Spending in Relation to Income

Food spending has increased considerably over the years, but the increase has not matched the gain in disposable income. As a result, the percentage of income spent for food has declined (table 28). In 1929, the first year data of this type were recorded, 23.9 percent of disposable income was spent for food. This percentage has since tapered off fractionally almost every year. By 1970, the percentage had dropped to 14.1 percent. During the 1970's, the percentage held fairly constant because of high food-price inflation. By 1980, food spending was still 13.8 percent of disposable income, but has since declined steadily to a low of 11.8 percent in 1989-90.

The decline in the percentage of income spent for food is the direct result of the inelastic nature of the aggregate demand for food. Ernest Engel noted this phenomenon in the 19th century. Engel observed that as income rises, the proportion of income spent for food declines. This decline occurs because expenditures for food require a large share of income when income is low. A decline in this percentage reflects a highly developed economy in which there is money to spend on personal services and other discretionary items. Some of these additional services ordinarily are purchased along with food. This reasoning largely explains the slight increase in the percentage of income spent on food away from home.

The percentage of income spent for food varies widely among households of different sizes and income. For instance, data from the 1989 Consumer Expenditure Survey that the U.S. Department of Labor conducted showed that the percentage of after-tax income spent for food was 15.3 percent for households with incomes of $30,000-$39,999, but was 30.7 percent for households with incomes of $5,000-$9,999.

ERS developed the estimates of food expenditures in table 28, which differ from the U.S. Department of Commerce estimates of personal consumption expenditures (PCE). The trend in food expenditures is similar, but the ERS series shows a lower level of spending for food than does the PCE series, particularly for food purchased at grocery stores and other retail outlets for consumption at home. The ERS estimate of at-home expenditures is lower partly because it excludes pet food, ice, and prepared feeds, which are included in PCE estimates. ERS estimates also deduct more from grocery store sales for nonfoods, such as drugs and household supplies, in estimating food purchases for at-home consumption.

Table 28--Food expenditures by families and individuals as a share of disposable personal income

Year	Disposable personal income	Expenditures for food			Proportion of income spent for food		
		At home 1/	Away from home 2/	Total	At home	Away from home	Total
	Billion dollars	Million dollars			Percent		
1929	81.7	16,918	2,617	19,535	20.7	3.2	23.9
1939	69.7	12,952	2,289	15,241	18.6	3.3	21.9
1949	187.9	33,774	7,768	41,542	18.0	4.1	22.1
1959	344.6	49,291	12,137	61,428	14.3	3.5	17.8
1961	373.8	51,069	13,100	64,169	13.7	3.5	17.2
1962	396.2	51,996	13,897	65,893	13.1	3.5	16.6
1963	415.8	52,374	14,546	66,920	12.6	3.5	16.1
1964	451.4	54,530	15,685	70,215	12.1	3.5	15.5
1965	486.8	57,382	16,946	74,328	11.8	3.5	15.3
1966	525.9	59,884	18,636	78,520	11.4	3.5	14.9
1967	562.1	60,254	19,776	80,030	10.7	3.5	14.2
1968	609.6	63,510	21,723	85,233	10.4	3.6	14.0
1969	656.7	67,956	23,362	91,318	10.3	3.6	13.9
1970	715.6	74,166	26,418	100,584	10.4	3.7	14.1
1971	776.8	78,074	28,085	106,159	10.1	3.6	13.7
1972	839.6	84,441	31,329	115,770	10.1	3.7	13.8
1973	949.8	93,133	33,914	128,047	9.8	3.7	13.5
1974	1,038.4	105,374	38,534	143,910	10.1	3.7	13.9
1975	1,142.8	115,087	45,918	161,005	10.1	4.0	14.1
1976	1,252.6	122,949	52,575	175,524	9.8	4.2	14.0
1977	1,379.3	131,616	58,560	190,176	9.5	4.2	13.8
1978	1,551.2	144,991	66,755	211,746	9.3	4.3	13.7
1979	1,729.3	161,674	76,915	238,589	9.3	4.4	13.8
1980	1,918.0	178,421	85,407	263,828	9.3	4.5	13.8
1981	2,127.6	190,284	95,866	286,150	8.9	4.5	13.4
1982	2,261.4	197,714	104,553	302,267	8.7	4.6	13.4
1983	2,428.1	207,865	114,254	322,119	8.6	4.7	13.3
1984	2,668.6	219,238	122,527	341,765	8.2	4.6	12.8
1985	2,838.7	228,493	128,607	357,100	8.0	4.5	12.6
1986	3,013.3	238,465	138,061	376,526	7.9	4.6	12.5
1987	3,194.7	244,315	147,127	391,442	7.6	4.6	12.3
1988	3,479.2	255,884	158,462	414,346	7.4	4.6	11.9
1989	3,725.5	272,716	166,768	439,484	7.3	4.5	11.8
1990	3,946.1	286,932	178,167	465,099	7.3	4.5	11.8

1/ Includes food purchases from grocery stores and other retail outlets, including purchases with food stamps and food produced and consumed on farms, because the value of these foods is included in personal income. Excludes Government-donated foods. 2/ Includes purchases of meals and snacks by families and individuals, and food furnished employees because it is included in personal income. Excludes food paid for by government and business, such as food donated to schools, meals in prisons and other institutions, and expense-account meals.

* U.S. G.P.O.:1991-281-091:40063/ERS

Get these timely reports from USDA's Economic Research Service

These periodicals bring you the latest information on food, the farm, and rural America to help you keep your expertise up-to-date. Order these periodicals to get the latest facts, figures, trends, and issues from ERS.

Agricultural Outlook. Presents USDA's farm income and food price forecasts. Emphasizes the short-term outlook, but also presents long-term analyses of issues ranging from international trade to U.S. land use and availability. Packed with more than 50 pages of charts, tables, and text that provide timely and useful information.

Economic Indicators of the Farm Sector. Updates economic trends in U.S. agriculture. Each issue explores a different aspect of income and expenses: national and State financial summaries, production and efficiency statistics, and costs of production for livestock and dairy and for major field crops.

Farmline. Concise, fact-filled articles focus on economic conditions facing farmers, how the agricultural environment is changing, and the causes and consequences of those changes for farm and rural people. Synthesizes farm economic information with charts and statistics.

Food Review. Offers the latest developments in food prices, product safety, nutrition programs, consumption patterns, and marketing.

Foreign Agricultural Trade of the United States. Every 2 months brings you quantity and value of U.S. farm exports and imports, plus price trends. Subscription includes two big 300-page supplements containing data for the previous fiscal or calendar year. A must for traders!

Journal of Agricultural Economics Research. Technical research in agricultural economics, including econometric models and statistics on methods employed and results of USDA economic research.

Rural Conditions and Trends. Tracks rural events: macroeonomic conditions, employment and underemployment, industrial structure, earnings and income, poverty and population.

Rural Development Perspectives. Crisp, nontechnical articles on the results of the most recent and the most relevant research on rural areas and small towns and what those results mean.

World Agriculture. Deals with worldwide developments in agricultural markets and trade. Updates current conditions and recent economic changes, and highlights significant trends—all with an emphasis on implications for global and U.S. agriculture.

❑ Check here for a **free** subscription to *Reports*, a quarterly catalog describing the latest ERS research reports. It's designed to help you keep up-to-date in all areas related to food, the farm, the rural economy, foreign trade, and the environment.

	1 year	**2 years**	**3 years**
Agricultural Outlook (11 per year)	_____ $26	_____ $51	_____ $75
Economic Indicators of the Farm Sector (5 per year)	_____ $14	_____ $27	_____ $39
Farmline (11 per year)	_____ $12	_____ $23	_____ $33
Food Review (4 per year)	_____ $11	_____ $21	_____ $30
Foreign Agricultural Trade of the United States (8 per year)	_____ $25	_____ $49	_____ $72
Journal of Agricultural Economics Research (4 per year)	_____ $8	_____ $15	_____ $21
Rural Conditions and Trends (4 per year)	_____ $14	_____ $27	_____ $39
Rural Development Perspectives (3 per year)	_____ $9	_____ $17	_____ $24
World Agriculture (4 per year)	_____ $21	_____ $41	_____ $60

Complete both sides of this order form.
Single copies of all periodicals available for $8.00 each.

Save by subscribing for up to 3 years!

Situation and Outlook Reports. These reports provide timely analyses and forecasts of all major agricultural commodities and related topics such as finance, farm inputs, land values, and world and regional developments.

	1 year	2 years	3 years
Agricultural Income and Finance (4 per year)	_____ $12	_____ $23	_____ $33
Agricultural Resources (5 per year, each devoted to one topic, including *Inputs, Agricultural Land Values and Markets*, and *Cropland, Water, and Conservation.*)	_____ $12	_____ $23	_____ $33
Aquaculture (2 per year)	_____ $12	_____ $23	_____ $33
Cotton and Wool (4 per year)	_____ $12	_____ $23	_____ $33
Dairy (5 per year)	_____ $12	_____ $23	_____ $33
Feed (4 per year)	_____ $12	_____ $23	_____ $33
Fruit and Tree Nuts (4 per year)	_____ $12	_____ $23	_____ $33
Livestock and Poultry (6 per year)	_____ $17	_____ $33	_____ $48
Livestock and Poultry Update (monthly)	_____ $15	_____ $29	_____ $42
Oil Crops (4 per year)	_____ $12	_____ $23	_____ $33
Outlook for U.S. Agricultural Exports (4 per year)	_____ $12	_____ $23	_____ $33
Rice (3 per year)	_____ $12	_____ $23	_____ $33
Sugar and Sweetener (4 per year)	_____ $12	_____ $23	_____ $33
Tobacco (4 per year)	_____ $12	_____ $23	_____ $33
U.S. Agricultural Trade Update (monthly)	_____ $15	_____ $29	_____ $42
Vegetables and Specialties (3 per year)	_____ $12	_____ $23	_____ $33
Wheat (4 per year)	_____ $12	_____ $23	_____ $33
Agriculture and Trade Reports (5 per year) Supplement your subscription to *World Agriculture* by subscribing to these five annuals: *Western Europe, Pacific Rim, Developing Economies, China*, and *USSR*.	_____ $12	_____ $23	_____ $33

For *fastest* service, call our order desk toll free: 1-800-999-6779 (8:30-5:00 ET in the U.S. and Canada; other areas please call 301-725-7937)

- Use purchase orders, checks drawn on U.S. banks, cashier's checks, or international money orders.
- ***Make payable to ERS-NASS.***
- Add 25 percent for shipments to foreign addresses (includes Canada).

Name _____

Organization _____

Address _____

City, State, Zip _____

Daytime phone (_____)_____

☐ Bill me. ☐ Enclosed is $_____.

Credit Card Orders:

☐ MasterCard ☐ VISA Total charges $ _____.

Credit card number: ☐☐☐☐☐☐☐☐☐☐☐☐☐☐☐☐

Expiration date: Month / Year ☐☐

Complete both sides of this order form and mail to:

ERS-NASS
P.O. Box 1608
Rockville, MD 20849-1608