AgEcon SEARCH
RESEARCH IN AGRICULTURAL & APPLIED ECONOMICS

The World's Largest Open Access Agricultural & Applied Economics Digital Library

This document is discoverable and free to researchers across the globe due to the work of AgEcon Search.

Help ensure our sustainability.

Give to AgEcon Search

AgEcon Search
http://ageconsearch.umn.edu
aesearch@umn.edu

*Papers downloaded from **AgEcon Search** may be used for non-commercial purposes and personal study only. No other use, including posting to another Internet site, is permitted without permission from the copyright owner (not AgEcon Search), or as allowed under the provisions of Fair Use, U.S. Copyright Act, Title 17 U.S.C.*

#8297.

AGRICULTURAL POLICY ADJUSTMENTS IN THE KOREAN RICE ECONOMY

Hiroshi Yamauchi
Professor
Agricultural & Resource Economics
University of Hawaii, USA

and

Yong Dae Kwon
Assistant Professor
Agricultural Economics Department
Chungnam University, Korea

UNIVERSITY OF CALIFORNIA
DAVIS
NOV 29 1990
Agricultural Economics Library

1990

Abstract: A political preference function is used to endogenize government actions in a simultaneous equation model that is tested for Korean rice policy. The effects of macroeconomic changes on rice pricing decisions through estimated political weights are validated to open the way for better understanding of policy adjustments in East Asia.

Key words: endogenous rice policy, macroeconomy, political preference function, political weights, simulation, trade, Korea, East Asia

August 1990

Korea - Agriculture

AAEA 1990

#8297

AGRICULTURAL POLICY ADJUSTMENTS IN THE KOREAN RICE ECONOMY

INTRODUCTION

Models designed to analyze the welfare impacts of agricultural policies on producers, consumers, and taxpayers have tended to treat the actions of government as exogenous to the private market economy. As a result, policy implications derived from such models have met with limited success in furthering our understanding of the reform process. More recent modeling efforts based on the theory of efficient government redistribution attempt to endogenize the role of government consistent with the actual policy making process (Rausser and Freebairn 1974, Zusman 1976, Sarris and Freebairn 1983, and Paarlberg and Abbott 1986). The model presented in this paper adopts this new approach to test the hypothesis that political activities of competing interests in both the private sector and the public sector are functionally related to the pressures of economic changes over time. A political preference function is used to measure the relative political weights of competing interests in the institutional decision making process. The economic factors that influence changes in the political weights are then tested econometrically. Government is explicitly endogenized in the model which was designed for the East Asian rice economies and has, thus far, been applied to the case of Korea.

STRUCTURE OF THE MODEL

The components of the political economic system of the East Asian rice economy can be described by three sets of equations as follows: (i) economic structural equations, (ii) endogenous policy decision equations, and (iii) political macroeconomic system equations. The model focuses on measuring how policymakers accommodate the competing interests of private and public groups to influence rice price policy in the context of changing macroeconomic environments.

The Domestic Rice Economy

The structure of the domestic rice economy in East Asia is reflected in its supply of and

demand for rice. In the model, supply and demand are specified in terms of domestic production and domestic consumption that clears the market. The following implicit functions may be specified in simple linear terms. Time subscripts are omitted. Domestic production is a function of the ratio of domestic producer prices divided by the producer cost index.

$$DP = F1(PDP/PAI) \quad (1)$$

Domestic consumption is a function of the ratio of domestic consumer prices divided by the consumer price index, and per capita income.

$$DC = F2(CDP/CPI, PGNP) \quad (2)$$

where:
DP and DC are the quantities supplied and demanded,
PDP and CDP are the current prices faced by domestic producers and consumers,
PGNP is per capita income,
PAI is the index of prices paid by producers,
CPI is consumer price index.

The market-clearing constraint accounts for changes in storage and net imports. Thus, domestic production is equal to domestic consumption plus net changes in stock minus net imports.

$$DP = DC + (ST - ST1) - NIM \quad (3)$$

where:
ST and ST1 are the rice stocks in the current and previous years respectively,
NIM is net imports of rice.

Political Preference Function to Endogenous Policy Decisions

Endogenous policy decisions are reflected in a political preference function that is designed to capture the relative influences of producers, consumers, and government agencies in setting the levels of domestic rice prices to producers (PDP) and consumers (CDP). The model is specified in simple weighted additive terms as follows.

$$W = WP*UP + WC*UC + WG*UG \quad (4)$$

where:
WP, WC, and WG are the political weights attached to the rice producers, consumers, and government respectively,
UP, UC, and UG are the welfare measures of the rice producers, consumers, and government respectively.

Policymakers arbitrate the conflicting objectives of interest groups seeking their own benefits from the rice policy. The political weights (WP, WC, and WG) capture the marginal values accruing to the welfare measures of the respective interest groups as a result of political bargaining. These weights also reflect the political willingness of the policymakers to redistribute income through adjusting the rice policy based on the assumption that optimum actions are taken to maximize the value of the political preference function. The weights are associated with each interest group's welfare measure as follows. The producers' welfare (UP) is measured by a profit function that depends upon the price of rice received by the producers. The consumers' welfare (UC) is measured by an expenditure function that depends upon the price paid by the rice consumers at a given utility level. And finally, the government's welfare is measured by the net fiscal balance in the grain management fund after accounting for all receipts from consumers and outlays to producers, importers, and for storage costs.

$$UP = P(PDP) \tag{5}$$

$$UC = -E(CDP, Ucons) \tag{6}$$

$$UG = CDP*DC - PDP*DP - BPR*NIM + (PDP - CDP)*(ST - ST1) \tag{7}$$

where:

P(.) is the profit function of rice producers,
E(.) is the rice expenditure function of consumers for given utility level Ucons,
BPR is the border price for rice.

The first term on the RHS of equation (7) is the revenue from selling rice to consumers, and the second and third terms are costs of purchasing domestic production and importing, respectively. The fourth term represents changes in storage costs resulting from both outlays (negative) and receipts (positive) due to the addition of or draw down on the rice stock. Thus, the government's interest (as viewed from the vantage point of policymakers) accounts for the distribution of social revenues and costs of agricultural rice policy incident upon consumers, producers, exporters, and taxpayers.

Approach to Quantifying the Political Weights : A set of computational formulas for the political weights was derived by maximizing the political preference function W given in

equation (4), subject to the market-clearing constraint of equation (3) with respect to the three main policy instruments, the producers' domestic price (PDP), the consumers' domestic price (CDP), and the net imports (NIM). The underlying assumption for pluralistic societies is that the actual price levels approximate the politically feasible optimal policy (i.e., the revealed preference assumption in Rausser and Freebairn, 1974, and in Gardner, 1987). From the first order conditions, the following formulas were derived with the sum of the political weights normalized to equal 300.

$$WG = 300/(X+Y+1) \tag{8}$$

$$WP = 300 - WG - WG*Y \tag{9}$$

$$WC = 300 - WG - WP \tag{10}$$

where:

$X = \{DP+(PDP-BPR)*[\partial DP/\partial(PDP/PAI)]+ST-(ST1)\}/DP$,
$Y = \{DC+(CDP-BPR)*[\partial DC/\partial(CDP/CPI)]+ST-(ST1)\}/DC$,
$\partial DP/\partial(PDP/PAI)$ is the price coefficient of domestic production,
$\partial DC/\partial(CDP/CPI)$ is the price coefficient of domestic consumption.

If there are different political attitudes toward the interest groups in the policymaking process, political weights will be differentiated since the weights are designed to represent the political willingness of policymakers to favor one interest group over another. When the weights are tested to be different among interest groups, we can reject the null hypothesis that there is no political willingness to adjust the rice policy in favor of a particular group. In that case, political weights may vary with changing political circumstances. For this purpose, we assume that the policy-makers are aware of the underlying domestic behavioral relationships that are stable over time.

Determination of Endogenous Rice Price Policy: Once the political weights are quantified, we can derive the formulas for the endogenous domestic prices. By simply rearranging equations (11), (12), and (13) we have the following relationships that reflect political and economic influences.

$$PDP= BPR + (DP*WP/WG -DP-ST+ST1)/(\partial DP/\partial(PDP/PAI)) \tag{11}$$

$$CDP= BPR + (DC*WC/WG -DC-ST+ST1)/(\partial DC/\partial(CDP/CPI)) \tag{12}$$

From these equations, it is possible to evaluate how the various political economic factors

contribute to the establishment of the endogenous price levels. From equation (11), for example, the increasing political weight of producers relative to that of consumers and government clearly shows how this contributed to the rising producer prices.

Further, if we move the border price variable (BPR) to the LHS of equations (11) and (12), we can see how the political economic factors influence the differences between the domestic and international prices in equations (13) and (14).

$$PDP\text{-}BPR = (DP*WP/WG\text{-}DP\text{-}ST+ST1)/(\partial DP/\partial(PDP/PAI)) \quad (13)$$

$$CDP\text{-}BPR = (DC*WC/WG\text{-}DC\text{-}ST+ST1)/(\partial DC/\partial(CDP/CPI)) \quad (14)$$

These equations suggest the potential utility of the political weights in evaluating the historical changes in nominal protection rates of the East Asian rice economies. Equation (13) suggests that it was again the surging political power of rice producers that largely contributed to the widening price differentials between domestic producer prices and international border prices.

On the other hand, the difference between producer and consumer prices is determined without regard to international border prices, which cancel out in equation (15). Here, the differences are influenced purely by domestic demand and supply factors that are also reflected in the political weights of consumers and producers relative to that of government.

$$CDP\text{-}PDP = (DC*WC/WG\text{-}DC\text{-}ST+ST1)/(\partial DC/\partial(CDP/CPI)) - (DP*WP/WG\text{-}DP\text{-}ST+ST1)/(\partial DP/\partial(PDP/PAI)) \quad (15)$$

Channels of Macroeconomic Influences on the Domestic Rice Economy

Once the political weights of interest groups are shown to have significant influence on rice policy decisions, the next step is to test for macroeconomic factors that may be functionally related to changes in the political weights. Macroeconomic changes and their links to the agricultural sector have been shown to have significant causal relationships to policy developments in the United States, leading to government intervention in agriculture (Andrews and Rausser, 1986).

Conceptually, macroeconomic forces are translated into rice policymaking in a sequential

process. Changing macroeconomic factors that impact on the rice industry enter a "political black box" where conflicting interests lobby to adjust the institutional rules that govern operating decisions at the farm level and ultimately the performance of the rice economy. Attention is focused on how macroeconomic forces are transmitted to rice policy adjustments that are brought about through the policy-influencing efforts of interest groups. The actual transmission processes can be quite complicated and include both forward and backward linkages between the rice economy and the macroeconomy. The selection of macrovariables depends upon the particular political economic conditions of the economy.

EMPIRICAL TEST OF THE KOREAN RICE ECONOMY

The role of the Korean government in the domestic rice economy has been a major factor in the political macroeconomy of agricultural policy adjustments since direct government procurements of rice from the farmers began in 1961. Ever since then, there has been much political conflict over determining the government procurement price, which impacts directly on the income and welfare of rural farmers and urban consumers.

The changing macroeconomic conditions over the past 25 years have created political pressures to adjust rice prices in accordance with the special interests involved. The Korean rice economy offers an opportunity to specify and empirically test a political macroeconomic modeling framework for expanding our knowledge of the agriculture policy adjustment process.

The Korean Rice Economy Model

Based on previously identified factors and relationships, the following econometric model consisting of 10 behavioral equations (f1-f10) and two accounting identities (I1-I2) was constructed to test the effects of macroeconomic changes on domestic rice policies.

1) Structural Equations of the Rice Economy

f1. DP = f1(LAG(PDP/PAI), FWI/SAI, LAG(DP), DUM1)

f2. DC = f2(CDP/CPI, GNP/POP, LAG(DC))

I1. NIM = DC - DP + ST - LAG(ST)

2) Endogenous Policy Decisions

f3. PDP = f3(USBPR*EX, PAI, LAG(DP)*WP/WG, LAG(FWI))

f4. CDP = f4(USBPR*EX, CPI, DC*WC/WG, LAG(CDP))

3) Political Macroeconomy of Rice

f5. WG = f5(GMFD, GVD, LAG(WG), DUM2)

f6. WP = f6(SAI/PAI, DP/DC, RRUI, GNPA/GNP, DUM2)

f7. WC = f7(GNP/POP, CDP/CPI, LAG(WC))

f8. CON = f8(GNP, LAG(CON))

f9. MS = f9(LAG(MS), GMFD, GVD, GNP)

f10. CPI = f10(LAG(MS), GNP, SAI, LAG(CPI))

I2. GNP = CON + INV + GVC + GX - GM

where:

SAI/PAI is the parity price index (ratio of prices received [SAI] to the prices paid [PAI] by farmers),
DP/DC is the self-sufficiency rate,
RRUI is the ratio of rural household income to urban household income,
GNPA is the aggregated value of agricultural products,
GNP is the gross national product,
GNP/POP is the per capita GNP,
CDP/CPI is the real consumer price for rice,
GMFD is the deficits of the Grain Management Fund (GMF),
GVD is the total government budget deficits,
CON is the aggregate consumption,
USBPR*EX is the border price of rice in terms of Korean *won*,
DUM1 and DUM2 are dummy variables,
MS is the money supply,
INV is the gross investment,
GVC is the government expenditure,
GX is the gross exports,
GM is the gross imports.

Figure 1 illustrates the major linkages among the relevant variables. Basically, macroeconomic factors play major roles in bringing about functional linkages among the variables.

[Figure 1]

Quantification of the Political Weights

Figure 2 shows the results of applying equations (8), (9), and (10) on page 4 with data from official Korean sources covering the 25-year period 1961–1985. The estimated patterns

and trends are significantly different from the 100 baseline and pairwise among the three interest groups at the 5 percent level. The changing political weights clearly indicate that Korean rice policymakers favored producers by raising prices for their outputs.

[Figure 2]

This implies an increased political willingness to redistribute income in favor of rural farmers. Their political weights increased by about 30 percentage points, while those of consumers and government both fell by about -15 percentage points over the period. In other words, the welfare of rice farmers (indicated by their income status) gained in the preference ranking of policymakers relative to that of consumers (expenditures) and the government (net revenues). This is consistent with the historical perspective of rice policy in Korea. The present policy of direct rice purchases from farmers began in 1961. But it wasn't until about 1968 that the food agency began increasing the purchase prices. The effects of the first oil crisis in 1973-1974 is clearly seen in the opposite swings in the political weights as the border price of rice shot sharply upwards. This temporary situation corrected itself in a couple of years as the government's domestic purchase prices continued to escalate in favor of the rice producers and border prices stabilized at a lower level. The second oil shock in the late 1970's had little effect on the border prices as the official domestic purchase prices continued to increase. A poor harvest in 1980 led to further sharp increases in producer and consumer prices, which then tended to correct themselves with better harvests in the following years.

Simulation Analysis of Macroeconomic Impacts

The estimated results of 10 behavioral equations representing the political macroeconomic system are summarized in Table 1. Since the mathematical structure of the model is nonlinear, the nonlinear three-stage least square method (N3SLS) was used to insure high efficiency in estimating the parameters. Based on the estimated equations,

we experimented with dynamic simulation analysis to explore the question of how external macroeconomic changes affected endogenous rice prices and the Korean rice economy.

[Table 1]

To test the validity of the model for this purpose, a historical simulation covering the period from 1962 to 1985 was carried out to compute the root mean square errors (RMSE) and root mean square percentage errors (RMSPE) of the simulated levels for the endogenous variables. Reasonable results were obtained, as shown in Table 2. Except for the money supply variable (MS) with a RMSPE of 36.3 percent, all the other variables have less than 20 percent RMSPE with the best precision in the political weights (less than 4 percent). The direct and indirect uncertainty effects of macro-level changes on the rice economy are reflected in the higher RMSPEs for domestic prices, production, and consumption.

[Table 2]

Results of Macroeconomic Impacts Simulation: Two simple scenarios of macroeconomic changes were simulated for the period 1969-1985 to test the general effects of expansionary versus contractionary macroeconomic policies. In the expansionary policy, gross government expenditure, budget deficits, and exchange rates were increased by 20 percent per year. In the contractionary policy, the same three same macrovariables were decreased by 20 percent per year. The results are summarized in Table 3.

[Table 3]

In the case of expansionary policy, the total net increase of producers' price is 870

thousand Korean won per ton and the net rice production increases by 2,791 thousand tons for the period. On the other hand, simulation of contractionary policy results in a net decrease of producers' price by 2,110 thousand won and production drops by 2,025 thousand tons over the same period. The implications are as follows. First, macroeconomic expansion is an important source of strengthening the political efforts of rice producers to increase rice prices and production levels. Second, the political influencing power of consumers with respect to rice prices gets weaker as the expansion of the economy continues. As a result, consumer rice prices move upward, in spite of a steady decline in the consumption of rice. Third, the required amount of rice imports is less in the expansionary phase than in the contractionary phase. This may be due to the fact that economic expansion leads to an increasing rate of rice production as the rate of consumption declines.

SUMMARY CONCLUSIONS AND IMPLICATIONS

The thrust of our efforts in this study has been to analyze the endogenous behavior of government in adjusting agricultural policy. We have focused on the conceptual and methodological approaches to (i) measuring the political weights of special interest groups including producers, consumers, and government in the formulation of agricultural policies, and (ii) measuring the macroeconomic determinants of changes in the political weights over time. An analytical model has been designed for East Asia with three major component parts including (i) structural equations representing the supply, demand, and market clearing functions for rice in the domestic economy, (ii) a political preference function to estimate the relative weights of the interest groups in establishing domestic rice procurement and price policies, and (iii) a set of 12 simultaneous equations to estimate the functional relationships between changes in the macroeconomy and the political economic system of the rice industry.

The model has been successfully tested for the case of Korea with data covering 25 years (1961–1985) of adjustments in government rice procurement and pricing policies. The dramatic increase in agricultural protectionism in Korea during this period can be explained

principally by changes in the domestic rice economy that contributed to the rapid rise in the political weight of producers and the gradual decline in political weights of both government and consumers.

The effects of changing rural-urban terms of trade on producers' political weight are clearly measurable through selected price and income parity ratios and the long-term structural decline in agriculture's share of GDP. The measurable effects on consumers' political weight are found in the changing aggregate per capita income and real price of rice. Government's political weight is significantly related to its fiscal balances in the general budget and the more specific grain management fund. The reasonable validity of the model allows us to conduct simulation experiments for alternative macroeconomic expansion and contraction conditions. During periods of prolonged economic expansion, political preference tends to favor higher producer prices and, therefore, increased production. This coincides with declining rice consumption, thereby lessening the need to import. The opposite tends to prevail during contractionary times.

The design and testing of our analytical model, thus far, has been limited to capturing the endogenous nature of agricultural policy adjustments on an incremental basis. Nevertheless, the way has been opened for further improvements in the specification of policies, the criterion function, and the transmission of domestic and international macroeconomic forces into the agricultural policy reform processes of East Asia.

CITED REFERENCES

Andrews, M.S., & G.C. Rausser. (1986). "Some Political Economy Aspects of Macroeconomic Linkages with Agriculture, "*American Journal of Agricultural Economics*, 68 (2): 413–417.

Gardner, Bruce L. (1987). *The Economics of Agricultural Policies*, New York: Macmillan Publishing Company

Paarlberg, Philip L., & Philip C. Abbott. (1986). "Oligopolistic Behavior by Public Agencies in International Trade: the World Wheat Market," *American Journal of Agricultural Economics*, 68 (2): 8–19.

Rausser, G.C., and J.W. Freebairn. (1974). "Estimation of Policy Preference Functions: An Application to U.S. Beef Import Quotas," *Review of Economics and Statistics*, 56:437-449.

Sarris, A.H., & John Freebairn. (1983). "Endogenous Price Policies and International Wheat Prices," *American Journal of Agricultural Economics*, 65:214–224.

Zusman, P. (1976). "The Incorporation and Measurement of Social Power in Economic Models," *International Economic Review*, 127:447-462.

Figure 1. Schematic Diagram of Model

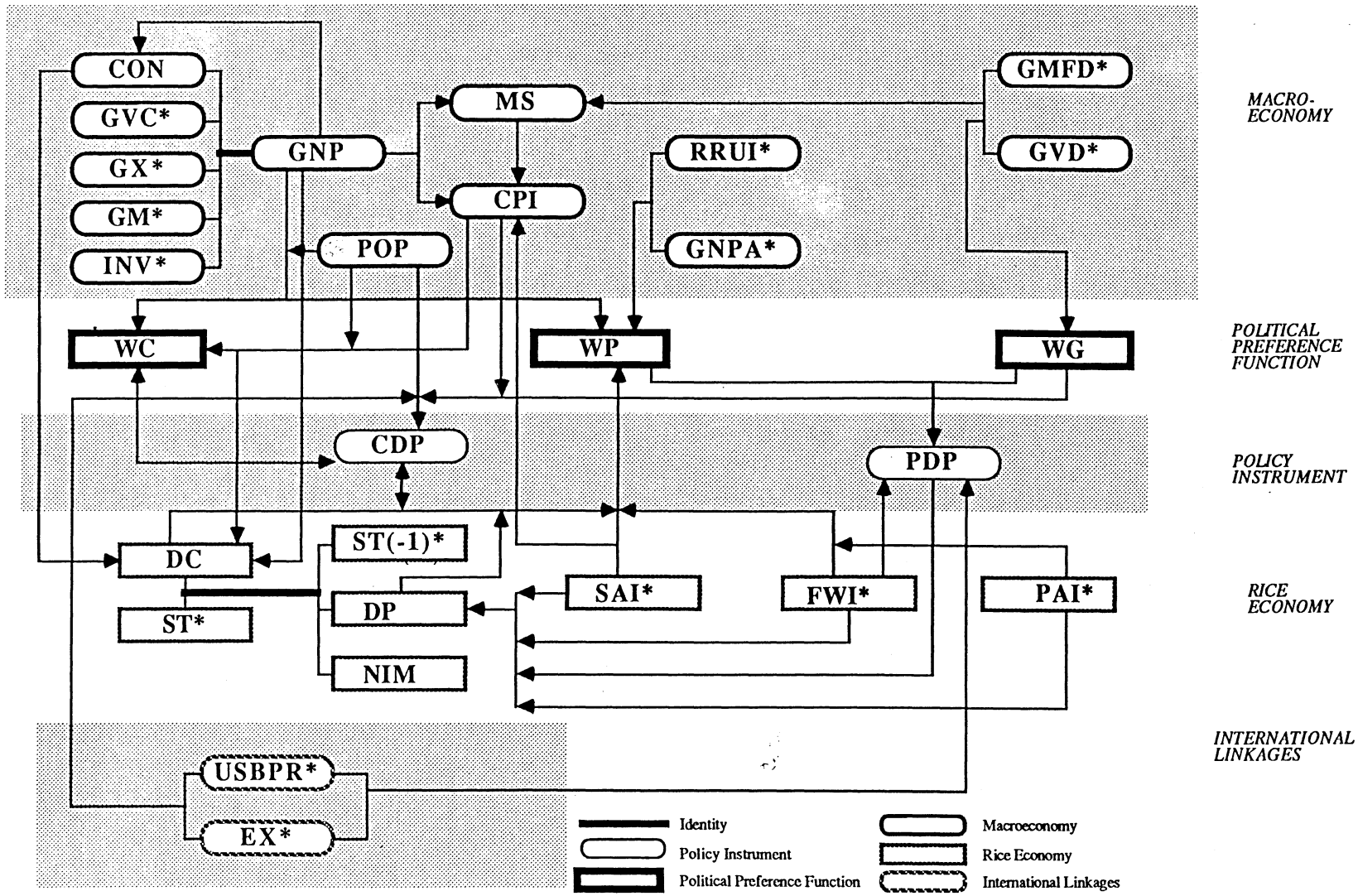

*Notes: * marked variables are exogenous*

Figure 2. Political Weights for the Korean Rice Economy

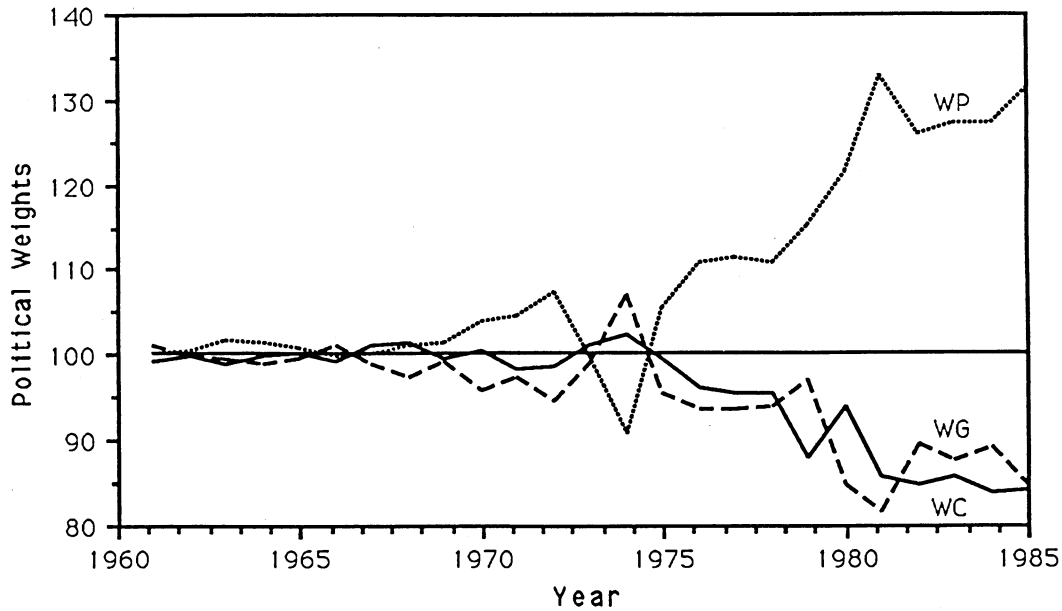

Table 1. Empirical Estimates

f1. DP = - 1296.13 + 5.0344*LAG(PDP/PAI) + 0.3829*LAG(DP) + 2136.17*(FWI/SAI) - 2183.5*DUM1
(3.11) (3.37) (4.48) (-7.60) $R^2 = 0.8577$

f2. DC = 1657.52 + 0.11805*(CDP/CPI) + 1.2584*(GNP/POP) + 0.44008*LG(DC)
(0.16) (3.02) (3.18) $R^2 = 0.8984$

f3. PDP = 46.99 + 0.10994*(USBPR*EX/10) + 388.69*PAI + 0.01499*(LAG(DP)*WP/WG) +
(0.76) (2.58) (2.98)
1.00286*LAG(FWI) $R^2 = 0.9945$
(2.07)

f4. CDP = 59.783 +0.3927*(USBPR*EX/10)) + 668.38*CPI - 3085*(DC*WC/WG) - 0.03379*LAG(CDP)
(4.25) (7.53) (-3.01) (-0.29) $R^2 = 0.9938$

f5. WG = 79.504 - 0.0053591*GVD - 0.0031151*GMFD + 0.19181*LAG(WG) + 13.541*DUM2
(-4.21) (-6.67) (2.30) (7.16) $R^2 = 0.8531$

f6. WP = 76.575 - 0.95619*(GNPA/GNP) + 0.004522*(SAI/PAI) + 0.3466*RRUI - 19.124*(DP/DC) -
(-10.64) (3.05) (6.18) (-2.12)
21.1182*DUM2 $R^2 = 0.8975$
(-5.52)

f7. WC = 65.942 - 0.01408*(GNP/POP) + 0.004786*(CDP/CPI)+0.388*LAG(WC)
(-3.46) (0.63) (2.78) $R^2 = 0.8386$

f8. CON = 1157.12 + 0.17245*GNP + 0.71657*LAG(CON)
(3.88) (8.66) $R^2 = 0.9977$

f9. MS = - 324.92 + 1.1164*LAG(MS) + 0.1029*GMFD + 1.2791*GVD + 0.0232*GNP
(50.24) (0.85) (6.25) (1.96) $R^2 = 0.9983$

f10. CPI = 0.02086 - 0.00000167*LAG(MS) + 0.00000205*GNP + 0.00612*SAI + 0.32862*LAG(CPI)
(-0.76) (2.58) (12.7) (3.86) $R^2 = 0.9980$

Note: Numbers in parentheses are t-values.

Table 2. Validation Test Results, RMSE and RMSPE of Historical Simulation (1962-1985)

Variable	RMSE	RMSPE
DP	766.62	19.93
DC	319.58	7.01
PDP	23.89	17.34
CDP	33.66	17.20
CPI	0.02	8.88
WG	2.21	2.41
WP	4.07	3.75
WC	2.65	2.64
GNP	960.29	5.22
CON	960.29	6.93
MS	1667.74	36.26

Table 3. Dynamic Impact of Macroeconomic Changes on the Endogenous Variables (1969-1985)

	EXPANSIONARY POLICY[1]		CONTRACTIONARY POLICY[2]	
	Total Net Changes		Total Net Change	
	Amount	Percent	Amount	Percent
DP (thous. m/t)	2, 791	78.9	-2,025	-26.6
DC (thous. m/t)	-1,281	-23.7	-4,039	-77.1
PDP (10 thous. won/t)	87	66.9	-211	-44.8
CDP (10 thous. won/t)	282	112.1	-237	-26.9
CPI (index)	-0.11	-30.8	-0.18	-45.3
WG (index)	2.56	4.1	8.17	10.3
WP (index)	26.5	26.4	-63.75	-55.2
WC (index)	-10.27	-8.7	11.54	15.4
NIM (thous. m/t)	-4,071	-1831.1	-2,013	-2,956.1
GNP (bil. real won)	7,696	17.8	-38,996	-123.2
CON (bil. real won)	-4,498	-29.5	-26,802	-127.0
MS (100 mil. current won)	33,714	499.9	-2,139	-71.6

Notes:

1. Expansionary macroeconomic policy is represented by 20% per annum increases in aggregate demand variables to expand output.
2. Contractionary macroeconomic policy is represented by 20% per annum reductions in aggregate demand variables to contract output.