AgEcon SEARCH
RESEARCH IN AGRICULTURAL & APPLIED ECONOMICS

The World's Largest Open Access Agricultural & Applied Economics Digital Library

This document is discoverable and free to researchers across the globe due to the work of AgEcon Search.

Help ensure our sustainability.

Give to AgEcon Search

AgEcon Search
http://ageconsearch.umn.edu
aesearch@umn.edu

*Papers downloaded from **AgEcon Search** may be used for non-commercial purposes and personal study only. No other use, including posting to another Internet site, is permitted without permission from the copyright owner (not AgEcon Search), or as allowed under the provisions of Fair Use, U.S. Copyright Act, Title 17 U.S.C.*

Vol XXXVII
No. 4

ISSN 0019-5014

OCTOBER-
DECEMBER
1982

INDIAN JOURNAL OF AGRICULTURAL ECONOMICS

INDIAN SOCIETY OF
AGRICULTURAL ECONOMICS,
BOMBAY

MANAGEMENT IN AGRICULTURE AND THE ROLE OF AGRICULTURAL ECONOMISTS IN INDIA*

D. K. Desai†

I

MANAGEMENT IN AGRICULTURE

Some scholars have considered management as a technique, a process, an activity, or a system for getting things done. Although a lot has been written about management, as a concept it has remained ambiguous in the minds of many people. Traditionally, the scope of management was seen in the context of enterprise-based activities. Matthai broadened the scope of management to include any form of organized human activity which requires planning, making decisions, and implementing them. Management in Agriculture is conceptualised under this broadened scope.

Three Dimensions of Management in Agriculture

Management in agriculture in India has three important dimensions; two of these form a setting, and differentiate it from other branches of management: (1) the agricultural system which is primarily a biological phenomenon, and composed of several sub-systems and (2) the people. In these two dimensions, the third dimension of management process operates. (see Figure 1).

The Concept of the Agricultural System

Mosher identifies four fundamental components of the agricultural system: farming, commercial agri-support activities, non-commercial agri-support activities, and agri-milieu. The concept of agri-business as developed by Davis and Goldberg includes mostly commercial activities. I had earlier attempted to develop the concept of the agricultural system and integrate the business and non-business components (Figure 2). This concept helps managers in the agricultural system to develop commercial and non-commercial activities and understand the linkages among them. Various sub-systems in the agricultural system are classified in such a way that when they are studied in relative isolation, the resulting increased knowledge about them can be fitted back into the whole system from which they are derived, and thus contributing to our understanding of the agricultural system. Each sub-system can also be viewed in a three dimensional form. Figure 3 gives a three dimensional form of the agricultural research sub-system.

---

* Presidential Address delivered at the 42nd Annual Conference of the Indian Society of Agricultural Economics held under the auspices of the G. B. Pant University of Agriculture and Technology, Pantnagar, District Nainital, Uttar Pradesh on November 5, 1982.

† Professor, Centre for Management in Agriculture, Indian Institute of Management, Ahmedabad.

I am extremely thankful to Professors Tirath R. Gupta, C. G. Ranade and Shreekant Sambrani for going through the first draft of my Address and giving very useful comments.

Figure 1. THREE DIMENSIONS OF MANAGEMENT IN AGRICULTURAL SYSTEM

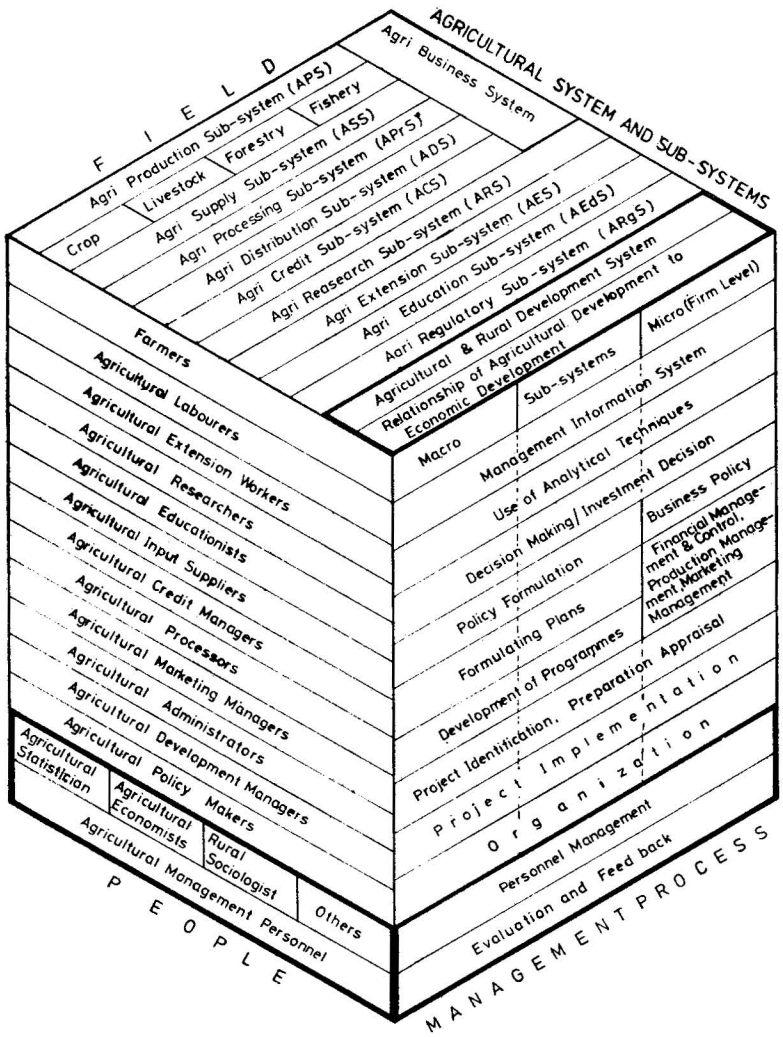

Figure 2. AGRICULTURAL SYSTEM

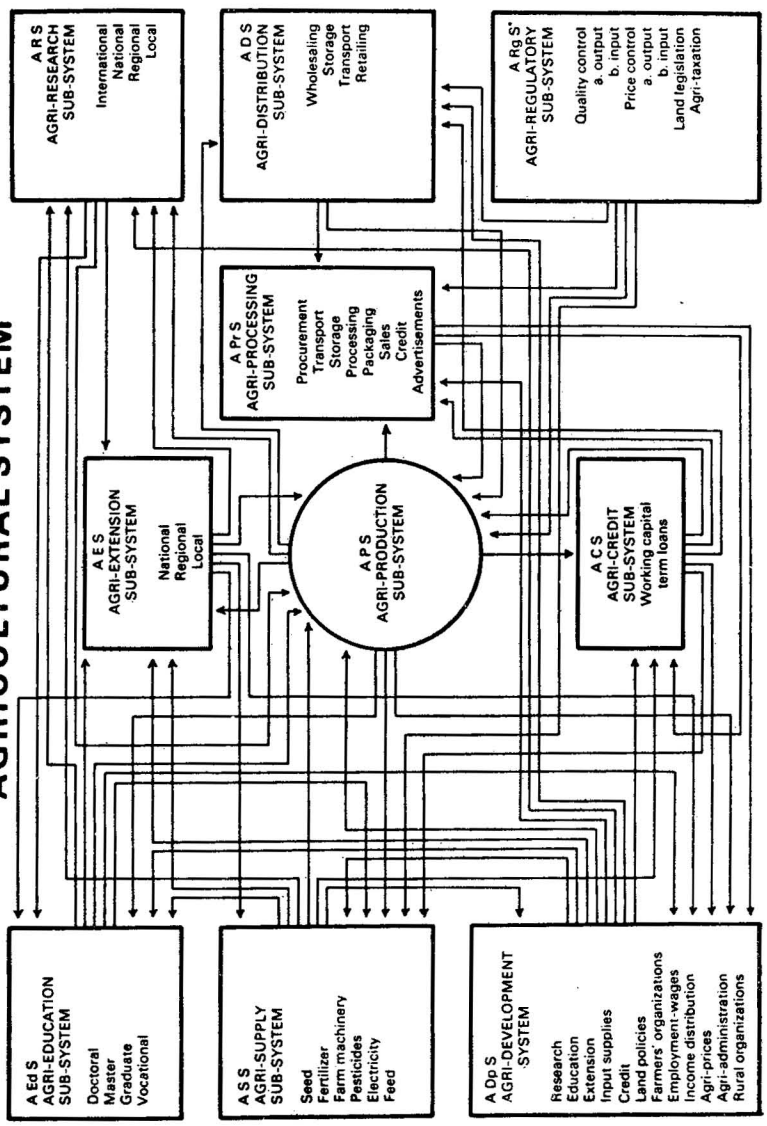

FIGURE 3 THREE DIMENSIONS OF MANAGEMENT IN AGRICULTURAL RESEARCH SUB-SYSTEM

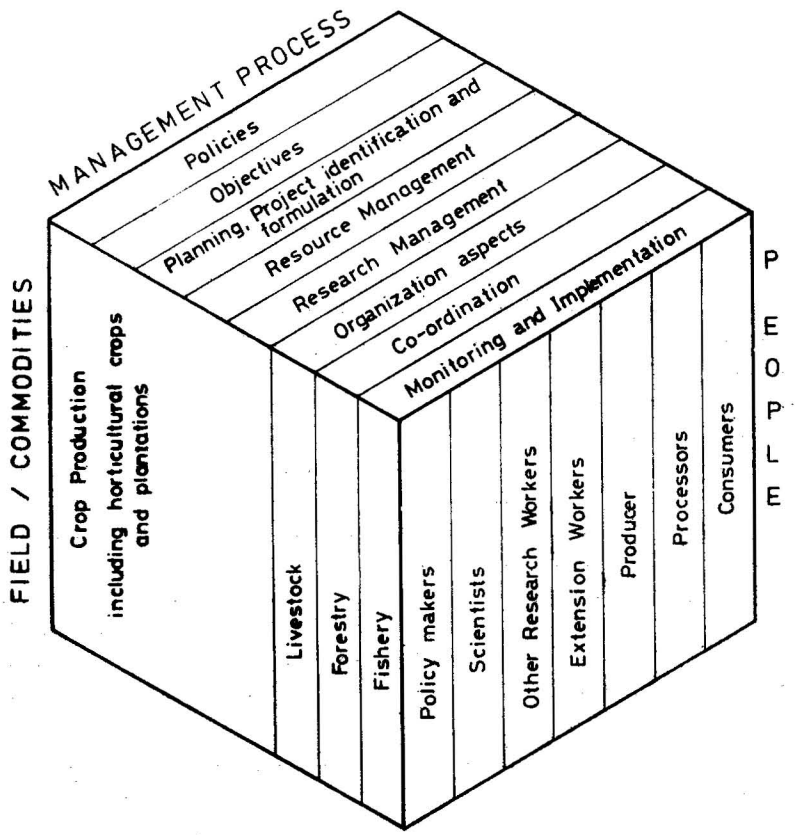

The Setting

I shall discuss each of the sub-systems along with people which constitute the setting of the agricultural system in India. The management process will be discussed for macro and micro levels of the agricultural system. In the discussions of the setting and management process the focus will be on the role of agricultural economists.

Agri-Production Sub-System (APS)

The most important agricultural sub-system in the developing countries is the agri-production sub-system (APS). The major components of the agricultural production sub-system are: crops including horticulture, and plantations; livestock; fisheries; and forestry production. In India crop production is the most important component, so much so that it is considered as synonymous with agricultural production. Although livestock population in India is the largest in the world, production of milk is very poor. Very inadequate attention is paid by agricultural economists to the livestock sector. Fisheries is slowly gaining importance. The scope for increasing production and marketing of both marine and inland fisheries is enormous. Forests cover nearly 22.7 per cent of the total geographical area. This is nearly half of the area under crop production which forms nearly 45 per cent of the total geographical area.

With the modernization of Indian agriculture, the use of new inputs like fertilizers and hybrid seeds has increased considerably. With the help of these modern inputs and the growth of irrigation, foodgrains production has sustained an upward turn since 1966-67, and has never gone below the best production of the decade (1956 to 1966). This upward trend in foodgrains production after the introduction of new technology of hybrid seeds, fertilizers and irrigation, was termed as 'green revolution'. The 'green revolution', however, created a controversy among Indian agricultural economists. To some the 'green revolution' was just a myth. According to them, foodgrains output actually declined in the 1960s. Others held that such conclusions were arrived at on the basis of erroneous statistical analysis; in reality, foodgrains production had registered an increase with the introduction of new seeds. Figure 4 shows the trend of foodgrains production in India from 1955-56 to 1980-81.

Although superior foodgrains, wheat and rice, have kept pace with the population growth, the coarse grains particularly jowar, bajra and maize, and pulses and oilseeds have shown a slower growth. They have received much less attention from the people concerned with APS. Now the time has come when we have to use the theory of comparative advantage, and see where these crops, for which there is good demand, could be developed. The problems of these slow growth crops will be discussed in one of our Sessions. In APS, many problems have to be solved by agricultural economists. I shall refer to these problems later.

FIGURE 4: FOODGRAIN PRODUCTION IN INDIA 1955-56 TO 1980-81

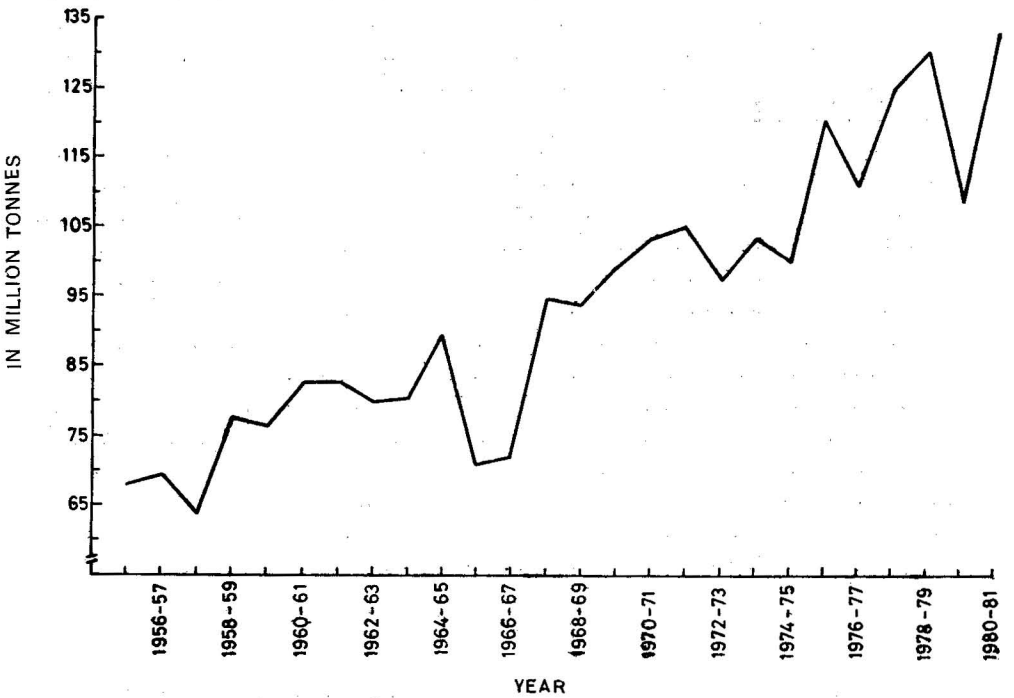

The key personnel in APS are farmers. Skewness in distribution, both of ownership holdings and operational holdings, vexed agricultural economists and policy makers since Independence. Because of the pre-occupation with the structural aspects of land distribution, very little attention is paid by agricultural economists to farmers as managers of agricultural production.

There are hardly any studies of classification of farmers on the basis of production efficiencies, management levels, or even educational levels. The concern for resource availabilities with different classes of farmers has overshadowed the problems of how these resources are put to use. Farm management specifically deals with economic efficiency and productivity of farm resources.

On the one hand, we are concerned with a large number of small and marginal farmers having inadequate resources even to eke out a living at a reasonable standard, and on the other, no study is undertaken as to how much success we have achieved in making non-viable small and marginal farms viable, when productive resources are diverted for this purpose. No systematic study is undertaken to find out whether the income of small and marginal farmers can be increased through self-employment by providing them additional assets or through wage-paid employment by providing facilities to viable farms or non-farm activities which could provide employment.

There are very few studies in India by agricultural economists to show how investment in education of farmers (human capital) would improve managerial abilities of farmers. In USA Schultz has shown the economic value of education. Welch has already documented the effect of differences in the quality of schooling on earnings of rural farm people in USA. An interesting study was made by Baldev Singh on impact of education on farm production in India.

If the attention is shifted from the resource ownership or operational rights of resources to management efficiency of resource use by viable peasant, co-operative or corporate farming, it may be possible to solve our major national problems of employment and low income. To improve production and productivity of the agricultural production sub-system, the farmers' attitude and abilities to learn and adopt new technologies need to be studied.

The second most important group in APS consists of agricultural labourers. While concern, perhaps rightly, is shown towards the problem of a large population of agricultural labourers and low wage rate, and poverty of this class, not enough attention is paid to skills and labour productivity which would tackle the problems of low wages and poverty. The topic of labour market in rural areas was discussed at the Thirtieth Conference of our Society (1970). The concerns of most of these papers were for wage rates and employment. Very little concern was shown for labour productivity.

Agri-Supply Sub-System (ASS)

ASS links agriculture with industry and business of the economy. The more developed is the agricultural system of an economy, the larger is the contribution of the ASS to the agricultural system. It provides inputs to the agricultural production sub-system (APS) which are manufactured by the organized industry sector (fertilizers, pesticides, veterinary medicines, farm machinery and implements). At the Twenty-sixth Annual Conference of our Society (1966), the topic on location and role of agricultural processing and supply industries was discussed and several papers were submitted on the subject but there was hardly any discussion on supply management of agricultural inputs.

The role of agricultural economists in helping farmers on the optimal use of modern inputs through farm management studies and to help input industries through market surveys for supply management need not be emphasized. But unfortunately in both these functions, the number of agricultural economists involved is quite inadequate. Agricultural economists working at the agricultural universities and colleges are trying to generate knowledge at the farm level and help farmers through farm management advisory functions but at the input industry level, there are very few agricultural economists to help agricultural input suppliers.

Because of the high demand created by the new technology and relative short supply of modern inputs, the efficiency of marketing management of input suppliers of the developed countries is not seen in our country. We do

not have a cadre of people in the agricultural supply sub-system, who are aggressively selling inputs to the farmers.

Agri-Processing Sub-System (APrS)

The agricultural processing sub-system (APrS) comprises agro-industries based on the output of agricultural production sub-system. It is striking that a large proportion of the production value of these industries comes from raw materials produced by the agricultural production sub-system. For example in India, cotton formed about 41 per cent of the final product. Because of this high degree of dependence, the agricultural processing sub-system displays some unique characteristics such as seasonality, perishability of the produce, and variability of its quality, which emerge because of agronomic, biological and economic variables. The high proportion of raw materials to the final value of production of agro-industries has locational implications. These industries are generally located in the raw material production areas rather than in the consumption areas.

By and large, the value added by processing to agricultural raw materials in most agricultural processing industries is quite low. For example, the value added to raw material in edible oil industry in India varied from 9 to 21 per cent. The management of APrS concentrates largely on the problems of procurement of raw materials. This becomes much more complicated where production of raw materials is dispersed among a large number of small producers scattered over a large area and its availability is concentrated in a short seasonal period. Even the processing technology adopted in the industry is largely governed by the economics of procurement of raw materials (for example, rice mills and groundnut expellers and extraction industries).

Although the use of modern agricultural inputs at the farm level has drawn at least some attention of agricultural economists, not enough attention is paid by them to the marketing of agricultural produce as raw material to agro-processing industries, except perhaps milk. The problems of procurement of raw materials by APrS from APS need a great deal of attention from agricultural economists who understand the problems of agricultural production, pricing and marketing. Very few studies of agricultural processing industries have been conducted by agricultural economists. The scope of agro-industries in the utilization of by-produce of APS and agricultural waste is not yet assessed. For the development of understanding of agro-industries and their potentials for increasing income and employment, industry level studies are required to be conducted by agricultural economists.

Agri-Distribution Sub-System (ADS)

There are two facets of the agricultural distribution sub-system: (1) procurement from producers, and (2) distribution of the produce to the consumers, with or without processing. Several agricultural economic studies have concentrated on the price spread between what the producer received

and what the consumer paid. Inferences drawn from studies on price spread have led to the belief that the private distribution system is exploitative and anti-social and hence should be curbed. No serious attention is paid to the costs of alternative systems of distribution and the satisfaction the consumer derives at present from the private distribution system.

At present about 700 crores of rupees are being spent in subsidising public food distribution system. In our discussion on subsidy for agricultural production, we should discuss whether it is possible to consider alternatives for subsidy in public food distribution to achieve the same objective of providing essential food supplies to the weaker sections of the society at reasonable prices.

Agri-Business System

The four enterprise-based sub-systems, namely, (1) the agri-supply sub-system, (2) the agri-production sub-system, (3) the agri-processing sub-system, and (4) the agri-distribution sub-system form an agri-business system which is depicted by an agri-business flow chart conceived by Davis and Goldberg. I had occasion to use this scheme of agri-business flow charts and made comparisons of flow charts of some developing countries with that of USA for approximately the same point of time. The comparisons showed that in developing countries the contribution of agricultural production sub-system was around 50 per cent of the total consumption expenditure on agri-business items whereas it was only 13 per cent in USA. The higher the contribution of the agricultural supply sub-system, the more modernized was the agricultural system. When the demand of consumers of agricultural commodities got better satisfied, the consumers paid higher prices not only for better quality but also for convenience. At this stage of development of the agricultural system, agricultural distribution sub-system got a very high proportion of the total expenditure on agri-business items.

Agri-Credit Sub-System (ACS)

The credit sub-system is closely related to all the sub-systems of the agri-business system and in a way can be considered an adjunct of the agri-business system. ACS can be developed as an enterprise-oriented activity. Because of the historical problems of indebtedness of the poor farmer community and the usurious rate of interest in the non-institutional credit market in India, the government had promoted the co-operative credit movement. In the fifty years of its existence, the co-operative credit movement has become a huge movement. Not satisfied with the performance of the co-operative credit movement, the government directed the nationalized banks to reserve a certain percentage of their loan-portfolio for agriculturists and small borrowers.

It appears that the share of the non-institutional credit has gone down. However, with the increase in the absolute demand for financing agriculture, the non-institutional finance is also becoming important. The usuriousness of interest of non-institutional finance is now not felt that much because the effective rate of interest of institutional finance is not much different.

Agricultural economists have taken great interest in the problems of institutional agricultural credit. This topic has been discussed several times in our Annual Conferences. There are several studies on credit needs but there are hardly any studies on demand for credit. There are no estimates of credit available from non-institutional finance and funds from self-financing.

The National Commission on Agriculture (NCA) has discussed the agricultural credit policy and has made recommendations to give special preference to small and marginal farmers. I have suggested that there is a need to have a second look at the credit policy for small and marginal farmers.

Agri-Research Sub-System (ARS)

The modernization of agriculture depends on technological development which in turn depends on the non-enterprise sub-systems of agricultural research, education and extension. It has been established by many agricultural economists that returns on investment in research far exceeds on-going rate of interest. The importance of management of agricultural research has been recognized by the Indian Council of Agricultural Research (ICAR) and it has set up the "National Academy for Agricultural Research Management" (NAARM) to undertake research and training for the management of agricultural research. The NCA has also stressed the need for improvement of agricultural research management and has made several specific recommendations.

An association of agricultural economists with the agricultural research institutions at the national, State and regional levels can help agricultural researchers in considering the socio-economic constraints at the stage of formulation of research policies, programmes, and projects. The evaluation of the impact of research recommendations is also a major function of agricultural economists.

Agri-Extension Sub-System (AES)

The back-bone of transfer of technology from ARS to APS is the agricultural extension sub-system (AES). In 1966-67, a breakthrough in the yields of foodgrains was achieved by the agricultural research sub-system. The limited spread of the green revolution had led the government, with the help of the World Bank consultants, to adopt a new approach which is known as the training and visit (T and V) programme. Although the T and V system is innovative in the administration of extension, its essential success depends on the technological package. This package has to be sufficiently profitable at the farm level to provide an incentive for the farmer to adopt innovations. A proper co-ordination of ASS with AES to deliver the demanded inputs at the right time is called for.

Discussions on the Economics of Investment in Organization of Extension Services in Agriculture were held at the Thirty-ninth Annual Conference of the Society (1979). They showed that investment in agricultural extension played a significant role in agricultural production but it was not uniformly effective in all States. It played a positive role in high productivity areas but not a very positive role in low productivity areas. The studies about agricul-

tural extension workers reveal that, by and large, they are inadequately trained, but the real burden of the extension work is shouldered by them.

Agri-Education Sub-System (AEdS)

The objective of establishing agricultural universities was to bring about an integrated approach to education, research and extension, and for this purpose the responsibilities of research have also been partly transferred to the agricultural universities. However, the links between research and extension have not become strong and hence during the Sixth Five-Year Plan, it is decided to further strengthen the linkages between development departments and agricultural universities.

With the T and V programme a large number of extension training programmes are established. The *Krishi Vigyan Kendra* Programme (KVKs) started towards the end of the Fourth Five-Year Plan has been expanded, and will be further strengthened during the Sixth Five-Year Plan. The NCA has made important recommendations on agricultural education.

If agricultural universities accept to train the manpower for enterprise-based agricultural sub-systems in addition to non-enterprise agricultural sub-systems, it would be necessary to impart sound knowledge of social sciences, such as economics, sociology, psychology and principles of business management at the bachelor degree level. The role of agricultural economists is to strengthen the place of social sciences in general and agricultural economics in particular at the agricultural colleges and universities.

Agri-Regulatory Sub-System (ARgS)

Because of a recognition that the major hurdles in agricultural development were the structural problems of land ownership, several legislations were enacted to protect the rights of tenants, to abolish tenancy altogether, and to establish ceiling on holdings. The effective implementation of all these regulations is yet to be achieved. Many agricultural economists believe that without a structural reorganization of farming, development cannot take place. In spite of the partial or indifferent implementation of land reforms, the development of agricultural production is unmistakable.

Several legislative measures are enacted to exercise quality control on agricultural inputs such as certification of seeds, and ban on the use of harmful pesticides. Control measures are used to divert irrigation from cash crops to food crops. Measures are taken to supply electricity on a priority basis to agriculture, even applying a cut to the industrial use. Attempts are made to give preferential treatment for irrigation facilities to small and marginal farmers. Measures are adopted to undertake community tasks such as contour bunding and water harvesting. Price controls, levy systems and take-over of wholesale foodgrains business are some of the measures taken to help the public distribution system for essential food commodities. The role of agricultural economists is to see that in their recommendations there is a judicious mix of regulatory measures which further promote the growth of agriculture rather than inhibit it.

Agricultural and Rural Development System (ARDS)

This is a co-ordinating system of all the sub-systems discussed so far The following quotation from Tarlok Singh summarises the problems of the agricultural and rural development system adequately: "If we give to the organization of agriculture a broad enough meaning, we could comprehend not only the state of ownership and operation of typical farm unit or units, and the distribution of land, but also levels of techniques, institutional services of the supply of credit, fertilizer, seed and other inputs, extension and training services, and arrangements for marketing and processing agricultural produce." This is similar to what I have described as the agricultural system.

Describing the problems of agricultural development, he says: "For all but a small proportion of farmers and some favoured regions, the prevailing organization is not in line with the technological, economic, and human imperatives of modern scientific agriculture, which involves continuing improvements in technology, increasing use of industrial inputs, rising levels of skills and knowledge, and greater social control over scientific management of land, water and energy resources." Various efforts should be made to make the agricultural system more dynamic so that it does not only solve the problems of agricultural development but also leads to rural development.

In addition to the intra-and inter-relationships of sub-systems of the agricultural system, we must also include at the field level, inter-sectoral relationships between agriculture and industry, the relationship of the agricultural system with rural development and the total economy. The general problems of economic development towards which the agricultural system should contribute its due share through agricultural taxation and other measures have to be looked into. The field of rural development, which covers a much larger canvas than agricultural development, is closely related to management in agriculture. For the present address, I have restricted only to the field of management in agriculture.

People Not Connected with Specific Sub-Systems

Agricultural policy makers: Policy formulation is an important task in which academicians, practitioners, administrators, and politicians take part. But the ultimate responsibility of policy making rests with politicians. Training of politicians in policy formulation is a very important task. Although there may not be a felt need by the present day politicians for such training, as the country develops, this aspect will gain importance, and we would find politicians who would consider getting training in policy formulation as their important function.

Agricultural statisticians: Data collection and analysis are the basis for all macro and micro management functions related to decision-making. Agricultural statisticians are required to collect relevant information on a systematic basis and analyse it in such a way that would be useful for decision-making. Fortunately, agricultural statistics is well-developed in India. The contribution of agricultural statisticians in providing relevant data to agri-

cultural economists and planners is valuable. India can reasonably be proud in the application of knowledge of advanced statistical techniques in agriculture even without the advanced types of computerized aids which are available in the developed countries. Although we have substantial achievements with regard to the quality of application of statistical techniques, we do not have trained agricultural statisticians in the number required to carry out the planning function at the district level, not to speak of at the block level.

Agricultural economists: In the academic world, there is no better discipline other than agricultural economics which explains the relationships between the agricultural system and the total economy, inter-system relationship and intra-system relationships. Understanding and explaining the economic functions involved in the whole agricultural system, sub-systems, and the micro levels of the off-farm-firm and the farm and helping decision-makers in the selection of alternatives under the given resource constraints and choice criteria are the important functions of agricultural economists. While describing different agricultural systems I have already referred to their roles. It is quite obvious that although agricultural economists are important personnel to help management in agriculture, they are the ones among many others whose roles are equally important in managing the agricultural system, sub-systems, organizations, and firms within the sub-systems.

Management Process

The management process is much broader in scope and diversity in management in agriculture than that in other branches of management discipline. Because of this wide scope and diversity, management in agriculture differs much from the business management which generally deals with the management problems at the firm level in industrial and business sectors of the economy.

The management process for the agricultural system as a whole can be divided into two levels: macro and micro. Some of the important management functions which can be understood and explained by agricultural economists are as follows:

(1) Management information collection and analysis;
(2) Use of analytical techniques for decision-making;
(3) Decision-making/investment decision;
(4) Macro policy formulation: (*a*) policy formulation for agricultural development in the context of overall economic development; (*b*) policy formulation for the agricultural system; and (*c*) policy formulation for individual sub-system;
(5) Developing and formulating plans for the agricultural system and sub-systems;
(6) Development of programmes: identification, formulation, and appraisal;
(7) Project identification, preparation and appraisal;

(8) Programme/project implementation;
(9) Organization for implementing policies, programmes, and projects;
(10) Personnel management;
(11) Evaluation and feedback.

In addition to these, the functions which are important at the micro level are financial management, accounting and control, production management, and marketing management.

The management functions in the organizations working in the non-enterprise-based agricultural sub-systems are not exactly like those of enterprise-oriented agricultural sub-systems. Because the overall objectives of these organizations in the non-enterprise-based agricultural sub-systems are development-oriented, and not profit making *per se*, the practitioners in these organizations have to orient themselves to these objectives, and perform their tasks accordingly. However, the efficiency and cost consciousness which are developed in the profit-oriented organizations have to be developed in these organizations also. Because of these differences, there are schools of thoughts which believe in delinking teaching of management for such organizations from that of profit-oriented organizations. Hence we have separate institutions for Co-operative Management, Public Enterprise Management, Management of Rural Development and others. It is a matter of controversy whether separation of management education on the basis of enterprise and non-enterprise activities, public and private sectors, development and other activities should be done.

For the management aspects of the firm/farm working in APS, a special discipline of farm management is developed. Similar to farm management which deals with management problems of APS, particularly crops and livestock production, a separate discipline is developed for forestry management and a separate Institute for Forestry Management is established in India. Similar institutions may develop for fisheries management. For management of agricultural research, the National Academy for Agricultural Research Management is already established. Serious thinking is going on to include management of agricultural education in this institution. The long-term objective of this institution is to develop into an institution doing research and teaching in agricultural development management.

It appears that the setting in which management functions are required to be carried out makes such differentiations that people feel a need for establishing a separate management institution for a particular setting.

II

CONTRIBUTIONS OF AGRICULTURAL ECONOMISTS

To find out what kind of help is received by management in agriculture from agricultural economists, a sample of materials from the vast literature generated by them was selected. I have restricted the selection of the sample only to two important journals to which most agricultural economists

contribute: (1) *Indian Journal of Agricultural Economics* (*IJAE*), and (2) *The Economic and Political Weekly* (*EPW*).

Fortunately, Shah and Sundaram have analysed articles contributed to *IJAE* for the period from 1946 to 1964. I have reclassified these articles on the basis of their contributions to management in agriculture. In addition, I have selected and analysed all the articles and notes of *IJAE* and *EPW* from 1965 to 1981 which were considered useful to management in agriculture.

In this study, I have analysed 895 articles of *IJAE* written by 1,360 authors and 225 articles of *EPW* written by 279 authors. The total number of articles analysed covering the three dimensions of management in agriculture are as follows:

Dimensions	Number of articles (1965-81)		
	IJAE	*EPW*	Total
1. Agricultural system and sub-systems ..	967	238	1,205
2. People	985	257	1,242
3. Management process			
Macro	638	159	797
Micro	273	66	339
Total	911	225	1,136
Number of actual articles*	895	225	1,120
Number of authors of articles**	1,360	279	1,639

* If an article pertains to more than one dimension, it is double-counted.
** If the same author/authors have contributed more than one article, they are double-counted.

The First Dimension: Agricultural System and Sub-Systems

I shall begin by comparing the contributions of articles in *IJAE* for the period 1946 to 1964 with those in *IJAE* and *EPW* for the period 1965 to 1981. This comparison is restricted only to the contributions towards the first dimension of management in agriculture, *viz.*, the agricultural system and its sub-systems (Table I). The pattern of distribution of articles of *IJAE* according to the sub-systems of the agricultural system has changed considerably during the second sub-period 1965-1981 from the first sub-period 1946-1964. In the first sub-period the emphasis was on agricultural and rural development system (ARDS) (35 per cent). The agricultural production sub-system (APS) (which meant primarily crop production) was given a little less importance (29 per cent). The next concern was the agricultural distribution sub-system (ADS) which emphasized mainly food distribution (15 per cent) followed by the agricultural credit sub-system (ACS) (12 per cent).

TABLE I—CLASSIFICATION OF *IJAE* AND *EPW* ARTICLES ACCORDING TO DIFFERENT SUB-SYSTEMS OF THE AGRICULTURAL SYSTEM

Sub-systems	Number of articles							
	IJAE Period 1946-1964		*IJAE* Period 1965-1981		*EPW* Period 1965-1981		Total of *IJAE* 1946-1981	
	No.	Per cent	No.	Per cent	No.	Per cent	No.	Per cent
Agri-production sub-system	174	29	430	45	56	24	604	39
Agri-supply sub-system	—	—	76	8	33	14	76	5
Agri-processing sub-system	—	—	13	1	1	0	13	1
Agri-distribution sub-system	87	15	98	10	23	10	185	12
Agri-credit sub-system	71	12	60	6	9	4	131	8
Agri-research sub-system; Agri-extension sub-system; Agri-education sub-system	39	5	36	4	6	3	75	5
Agricultural and rural development system	207	35	107	11	56	24	314	20
General agricultural and related aspects	20	4	147	15	52	21	167	10
Total	598	100	967	100	238	100	1,565	100

The second sub-period witnessed a dynamic change in the contribution of articles. The relative proportion of articles dealing with agricultural production increased by one and half times (45 per cent). The emphasis on agricultural supply sub-system (ASS) which deals with new inputs increased from nil to 8 per cent. The emphasis on ARDS reduced from 35 per cent to 11 per cent. Not only there was a quantitative change in the contributions pertaining to agricultural production but also there was a qualitative change. In the former sub-period the articles were more on macro aspects whereas in the latter period micro aspects were also emphasized.

In addition to the comparison of the compositions of articles for the period 1946 to 1964 and 1965 to 1981, I have also analysed the time trends in the contributions of articles related to management in agriculture (Table II). It becomes clear that the increase and decrease in the proportion of

TABLE II—TRENDS IN THE CONTRIBUTION OF ARTICLES ACCORDING TO SUB-SYSTEMS OF THE AGRICULTURAL SYSTEM

Years	APS		ASS		APrS		ADS		ACS		ARS AES AEdS		ARDS		General		Total	
	IJAE	*EPW*	*IJAE*	*EPW*	*IJAE*	*EPW*	*IJAE*	*EPW*	*IJAE*	*EPW*	*IJAE*	*EPW*	*IJAE*	*EPW*	*IJAE*	*EPW*	*IJAE*	*EPW*
1946-50	44 (20)	—	—	—	—	—	51 (23)	—	10 (5)	—	12 (5)	—	98 (44)	—	6 (3)	—	221 (100)	—
1951-55	20 (20)	—	—	—	—	—	5 (5)	—	18 (18)	—	15 (15)	—	36 (37)	—	4 (5)	—	98 (100)	—
1956-60	38 (31)	—	—	—	—	—	12 (10)	—	16 (13)	—	10 (8)	—	36 (30)	—	10 (8)	—	122 (100)	—
1961-64	72 (46)	—	—	—	—	—	19 (12)	—	27 (17)	—	2 (1)	—	37 (24)	—	— —	— —	157 (100)	— —
1946-64	174 (29)	—	—	—	—	—	87 (15)	—	71 (12)	—	39 (5)	— —	207 (35)	— —	20 (4)	—	598 (100)	—
1965-69	127 (38)	10 (19)	20 (6)	10 (19)	9 (3)	—	26 (8)	12 (23)	13 (4)	—	12 (4)	2 (4)	44 (13)	9 (17)	85 (24)	9 (18)	336 (100)	52 (100)
1970-74	112 (42)	20 (21)	28 (11)	22 (12)	2 (1)	1 (1)	26 (10)	6 (6)	2 (10)	5 (5)	—	4 (4)	41 (16)	21 (22)	28 (10)	28 (29)	265 (100)	96 (100)
1975-79	130 (49)	28 (32)	24 (9)	12 (14)	1 (0)	—	36 (14)	4 (5)	17 (6)	4 (5)	18 (7)	—	8 (3)	25 (29)	31 (12)	14 (15)	26 (100)	87 (100)
1980-81	61 (60)	—	4 (4)	—	1 (1)	—	10 (10)	1 (33)	3 (3)	—	6 (6)	—	14 (14)	1 (33)	3 (2)	1 (34)	102 (100)	3 (100)
1965-81	430 (45)	58 (24)	76 (8)	33 (14)	13 (1)	1 (0)	98 (10)	23 (10)	60 (6)	9 (4)	36 (4)	6 (3)	107 (11)	56 (24)	147 (15)	52 (21)	967 (100)	238 (100)
1946-81	604 (39)	58 (24)	76 (8)	33 (14)	13 (1)	1 (0)	185 (12)	23 (10)	131 (8)	9 (4)	75 (5)	6 (3)	314 (20)	56 (24)	167 (10)	52 (21)	1,565 (100)	238 (100)

N.B.:—Figures in brackets indicate percentages to the total.

articles pertaining to APS and ARDS respectively took place gradually over the period. The percentage of articles in *IJAE* on APS increased from 20 in the first quinquennium of 1946-50 to 49 in the quinquennium of 1975-79, whereas there was a decline for ARDS from 44 to only 3 per cent in the corresponding periods. In 1980-81 period, the percentage of articles on ARDS had increased to 14.

A greater diversification has taken place during the last three quinquennia. Greater attention has been paid to ASS which was non-existent in the earlier period. The surprising aspect is that with huge expansion in agricultural credit, the proportion of articles written for ACS in *IJAE* had declined. The concern for agricultural distribution sub-system (ADS), particularly foodgrains distribution and pricing system, has remained more or less the same during the whole period of 1946-1981.

Although about 45 per cent of *IJAE* and 24 per cent of *EPW* articles pertained to APS during the period 1965-1981, the concentration was mainly on crop production; other components of APS (to which I referred earlier) were more or less ignored (Table III).

TABLE III—CLASSIFICATION OF APS ARTICLES ACCORDING TO ITS MAIN COMPONENTS (1965-1981)

Components of APS	*IJAE*		*EPW*		Total	
	No.	Per cent	No.	Per cent	No.	Per cent
I. Crop production	352	81	51	88	403	82
(*a*) General	265	60	34	58	299	61
(*b*) Food crops	39	9	5	9	45	9
(*c*) Cash crops	25	6	1	2	26	5
(*d*) Input use	11	3	1	2	12	2
(*e*) Structural aspects	12	3	7	12	18	4
(*f*) Insurance	—	—	3	5	3	1
II. Livestock production	50	12	3	5	53	11
(*a*) General	49	—	2	1	51	10
(*b*) Dairying	1	—	1	0	2	1
III. Fisheries	11	3	0	0	11	2
IV. Forestry	13	3	0	0	13	3
V. General	7	1	4	7	11	2
Total	433*	100	58*	100	491	100

* The total number differs from that in Table I, because some articles although belonging to the same sub-system dealt with more than one topics in the sub-system.

Out of 491 articles on APS, as many as 403 (82 per cent) pertained to crop production only. Livestock was the subject of only 11 per cent of the articles whereas fisheries and forestry were dealt with in only 2 per cent each. This shows that crop production remained the major concern of agricultural economists. A dearth of articles on livestock, forestry and fisheries indicates a lack of appreciation of the importance of these components of APS.

The second important aspect to which agricultural economists paid attention right from the beginning is agricultural and rural development. I identified 30 different items under this system. The items on which a large number of articles were written are shown in Table IV. Most of the articles pertained to agricultural development. Although income distribution has been the concern of agricultural economists, it has not attracted that much attention even while dealing with the subject of agricultural and rural development.

TABLE IV—DISTRIBUTION OF ARTICLES ON AGRICULTURAL AND RURAL DEVELOPMENT SYSTEM (1965-1981)

Major components	*IJAE*		*EPW*		Total	
	No.	Per cent	No.	Per cent	No.	Per cent
1. Agricultural development	44	41	28	50	72	44
2. Income distribution	12	11	0	0	12	7
3. IADP	9	8	0	0	9	6
4. Rural development	3	3	5	9	8	5
5. Planning	7	7	1	2	8	5
6. Others	32	30	22	39	54	33
Total	107	100	56	100	163	108

The third important aspect on which the articles could be grouped was general agricultural and related aspects. Among these articles the important topics were agricultural regulations, agricultural development in the context of economic development and general agricultural system (Table V).

TABLE V—DISTRIBUTION OF ARTICLES ON GENERAL AGRICULTURE AND APPLIED ASPECTS (1965-81)

Major components	*IJAE*		*EPW*		Total	
	No.	Per cent	No.	Per cent	No.	Per cent
(1) Agricultural regulations	11	7	8	15	19	10
(2) Agricultural and economic development	25	17	9	17	34	17
(3) General agricultural system	97	66	33	63	130	65
(4) Others	14	10	2	5	16	8
Total	147	100	52	100	199	100

The fourth aspect on which a large number of articles were contributed during the period 1965-81 was on agricultural distribution sub-system. The major topics discussed in these articles were: (1) foodgrains distribution, (2) distribution of agricultural commodities, (3) agricultural exports, (4) price analysis, and (5) nutritional aspects (Table VI).

TABLE VI—DISTRIBUTION OF ARTICLES PERTAINING TO AGRICULTURAL DISTRIBUTION SUB-SYSTEM (1965-81)

Major components	*IJAE*		*EPW*		Total	
	No.	Per cent	No.	Per cent	No.	Per cent
Foodgrains	22	18	16	70	38	27
Agricultural commodities	12	10	0	0	12	8
Exports	11	9	0	0	11	8
Price analysis	7	6	2	9	9	6
Nutrition	9	8	0	0	9	6
Others	58	49	5	21	63	45
Total	119	100	23	100	142	100

The fifth aspect of importance was the agricultural supply sub-system. Under this sub-system, the articles pertained to fertilizers, labour, farm machinery and implements and others (Table VII). In the early period of development of agricultural economics in India, no articles were written on modern inputs. The very fact that fertilizers acquired equal importance as traditional input of labour in the later sub-period indicates the movement towards modernization.

TABLE VII—DISTRIBUTION OF ARTICLES ON AGRICULTURAL SUPPLY SUB-SYSTEM (1965-81)

Major components	*IJAE*		*EPW*		Total	
	No.	Per cent	No.	Per cent	No.	Per cent
Labour	19	24	12	36	31	28
Fertilizers	19	24	6	18	25	23
Farm machinery and implements	11	14	7	21	18	16
Energy	8	10	0	0	8	7
Others	21	28	8	25	29	26
Total	78	100	33	100	111	100

Agricultural credit has been discussed by agricultural economists from the beginning of the development of the discipline of agricultural economics in India. Perhaps it is one of the important reasons which had drawn the general economists of the early period to the discipline of agricultural economics. Institutional credit has been the subject of prime importance. Although non-institutional credit and self-financing are important sources of finance for agricultural production, they have not attracted due attention of agricultural economists (Table VIII).

TABLE VIII—DISTRIBUTION OF ARTICLES ON AGRICULTURAL CREDIT SUB-SYSTEM (1965-81)

Major components	*IJAE*		*EPW*		Total	
	No.	Per cent	No.	Per cent	No.	Per cent
Institutional credit	32	53	5	56	37	54
Credit for inputs	10	17	0	0	10	14
Deposit mobilization	8	13	0	0	8	12
Others	10	17	4	44	14	20
Total	60	100	9	100	69	100

The Second Dimension: People

The analysis of articles on the basis of people involved would indicate a concern for the clientele. There were about 20 different types of people who could be identified as clientele. The analysis shows that agricultural economists were overwhelmingly addressing their articles to policy makers. Looking to the present concerns of the policy makers one wonders whether such a large proportion of articles (56 per cent) addressed to the policy makers is a right thing (Table IX). Should we not evaluate our effort in terms of cost-benefit analysis? I have also analysed the time trend in the pattern of distribution of articles according to people. I did not notice any change in the particular trend different from the aggregate.

TABLE IX—DISTRIBUTION OF ARTICLES ACCORDING TO PEOPLE TO WHOM THEY ARE PRIMARILY ADDRESSED TO

People	Number of articles (1965-1981)					
	IJAE		*EPW*		Total	
	No.	Per cent	No.	Per cent	No.	Per cent
1. Policy makers	584	59	113	44	697	56
2. Agricultural economists	97	10	94	37	191	15
3. Farmers	139	14	20	8	159	13
4. Input supply managers	31	3	13	5	44	4
5. Credit managers	36	4	4	2	40	3
6. Programme project managers	19	2	1	0	20	2
7. Others	79	8	12	4	91	7
Total	985	100	257	100	1,242	100

The Third Dimension: Management Process

Articles pertaining to management processes were divided into two broad levels: macro and micro: (1) macro level covering the whole agricultural system and its sub-systems, and (2) micro level covering organizations, firms and farms.

The fact that about 70 per cent of the articles pertained to the macro level of management processes speaks about the state of affairs of concerns of agricultural economists. No doubt, the problems at the macro level (which are mostly to be solved by the policy makers, administrators, programme managers and financial institutions) are very important, but unless there is a demand for action at the micro level created by practitioners, all the efforts of agricultural economists writing on macro level problems would not give commensurate results. Hence it is very important that agricultural economists should address themselves to micro level also. We did not notice any trend different from what was observed at the aggregate level (Table X).

TABLE X—TRENDS OF MACRO AND MICRO LEVEL ARTICLES ON MANAGEMENT PROCESS

Years	*IJAE*						*EPW*					
	Macro		Micro		Total		Macro		Micro		Total	
	No.	Per cent	No.	Per cent	No.	Per cent	No.	Per cent	No.	Per cent	No.	Per cent
1965-1969 ..	202	60	115	40	317	100	37	72	14	28	51	100
1970-1974 ..	164	65	82	35	252	100	59	67	29	33	88	100
1975-1979 ..	191	76	61	24	252	100	62	74	21	26	83	100
1980-1981 ..	81	60	15	40	136	100	1	33	2	67	3	100
1965-1981 ..	638	70	273	30	911	100	159	70	66	30	225	100

III

EXPECTATIONS

In Part I of this Address, I discussed the concept of management in agriculture in India, its scope, and the roles which agricultural economists can, and should play. In Part II, I discussed the kinds of help received by the discipline of management in agriculture from agricultural economists in India. In this concluding part, I shall discuss what further help is expected from agricultural economists by the practitioners of management in the agricultural system.

The most important consideration to me is that the scope of agricultural economics in India should be expanded from the traditional concept of agricultural sector which resembles agricultural production sub-system to the entire agricultural system. Fortunately, we, agricultural economists in India, have increasingly moved away from the traditional concept, and have dealt with forward and backward linkages, and the necessary infrastructure of agricultural research, extension and education. My plea is that we accept expli-

citly the whole of agricultural system as our major field of work. Economic research of the whole agricultural system and recommendations based on this research work will help expeditious modernization of management in agriculture, and India would be able to play a leadership role in this discipline among all the developing countries.

The work done by us for the setting of management in agriculture is commendable but it does not cover the whole area of the setting adequately. The emphasis on agricultural production sub-system is necessary, but the time has now come when we have to expand our horizon from crop production to livestock, forestry, and fisheries. In crop production, instead of concentrating on foodgrains (mainly cereals), diversification is needed to include other food crops such as pulses, oilseeds, fruits and vegetables. The export possibilities of some of the food crops should not also be ignored. In livestock production, processing of milk and distribution have consumed most of the energies of people who are interested in this aspect. Enhancement of milk production, and research on livestock improvement have not received our adequate attention. Fisheries and forestry, although included as important components of the agricultural sector, have been more or less ignored by us. The scope of increasing fish production and marketing is tremendous. Instead of periferial attention, intensive and strenuous efforts are needed from us to push this aspect of the agricultural economy. Forestry needs a different kind of attention. In the anxiety to increase food production, much of the land which should have been preserved as forest area has been encroached. Indiscriminate forest exploitation in the past has now created problems of inadequate wood supply for construction and other wood-based industries. Conservation of forest is very essential for India. If half clout of agricultural economists is used on this issue, forestry development would accelerate.

Even as the agricultural supply sub-system is getting organized, the attention of agricultural economists is concentrated on the policy makers regarding pricing policies of inputs and equitable distribution instead of helping the practitioners of ASS to deliver the right kinds of input at the right time and at the right place for increased agricultural production. If we are not concerned solely with ideologies, perhaps more freedom, less control, better guidance through practical studies of economics of input use and delivery system will go a long way in modernizing the agricultural supply sub-system. We should change gears of our studies and pay more attention to the problems of the practitioners.

Unfortunately, agricultural processing is almost a field ignored in our studies, perhaps because of the mistaken thinking that it belongs to the industrial sector. If we want to modernize the agricultural system, it cannot be done without modernizing the processing sector. The dairy industry in India has proved this point. It is the modernization of the processing of milk which has given the fillip to milk production and conferred prestige on the dairy industry of India. Geographically, India is situated in such a position that processing would contribute much more to the national economy through export of processed food and products. The problems of agricultural processing,

procurement of raw materials, transport, storage, choice of technology, use of by-products and agricultural waste, and the demand for processed agricultural commodities need our immediate attention.

Traditionally in India we have been taught that the intermediaries, —traders, wholesalers, retailers, village merchants—are the exploiters who take away a lion's share of the consumer rupee. All our efforts to find alternatives to the 'exploiters' have ended up saddling us with higher costs. There is now a disguised form of exploitation. Instead of consumers paying for the services rendered to them, the non-consumers are made to pay through the subsidies given by the public exchequers for the alternatives to intermediaries. It is not always true that all consumers who get subsidised products are poor and consumers who do not use subsidised products are rich. Let us find out the real costs of distribution and then make recommendations regarding appropriate systems. If we find that the existing method of distribution is the cheapest among all the alternatives, our efforts should be to make it more efficient and make it still cheaper to serve the poor.

Although the HYV programme has proved that research can become the engine of modernization of the agricultural system, we have become more concerned about the side effects of this driving force. The duty of agricultural economists is to commune with agricultural scientists with regard to scientific and socio-economic constraints, so that the results of research help direct modernization of the agricultural system in the desired direction. But if the gains of modernization of agricultural system through research outweigh the losses because of the side effects, we should not castigate the agricultural scientists for the side effects. We should search for some other instruments to compensate for the losses due to the side effects. A close relationship between us and agricultural scientists is therefore a 'must' for the further development of the agricultural system.

If we want to become 'realists' and understand the problems of the real world of agricultural production, our association with agricultural extension workers should also increase. Farm management, which is gaining importance due to the efforts of agricultural universities, should get much greater attention in the discipline of agricultural economics. Let the farm management specialists work more closely with the agricultural extension workers and farmers instead of hobnobbing with the policy makers. Knowledge of the real world problems will help solve many on-the-ground-difficulties which hamper our progress in modernization instead of our 'preconceived' notions as to the difficulties farmers face.

Agricultural education should become much more business oriented. It should produce trained people who would be ready to undertake agricultural enterprises, both on-farm and off-farm. The need for good agricultural scientists and extension workers is also not to be ignored. But if this task is to be performed by agricultural universities, much more investment and better management of agricultural education system than obtaining at present are required. We can play an important role in 'influencing' the policy makers in this respect.

The source of finance for the agricultural system is thought to be only the institutions. Because of the past experience, non-institutional finance is discredited. Now when the demand for finance of the whole agricultural system is increasing, we should study all avenues of supplies and work out their relative costs and benefits, and then recommend strategies which are best for the modernization of the agricultural system. It may turn out that instead of a single pure strategy of institutional finance, a mixed strategy of institutional, non-institutional, and self-financing strategies may be an optimum one.

Considering the situation in India, properly designed and well meaning regulations have had a tendency of deteriorating into strait-jacket control measures. We need regulations for the quality control of agricultural produce, organized marketing, and good quality seeds, and agricultural inputs. We also need some kind of prioritization for use of electricity in irrigation and fossilized fuel for agricultural purposes. We should search for such recommendations as would be facilitating rather than controlling growth.

The development of the agricultural system based on the strengthening of individual sub-system will have a synergistic effect. The modernization of the whole system will be accelerated if we begin to work at the individual sub-system level and exchange our views instead of remaining at a general level and make recommendations from preconceived notions.

We should divert some of our attention from the policy makers to the practitioners. Firstly, the policy makers in the present context are preoccupied with many other things, hence it may be difficult for them to spare time to listen to what we have to say for policy making. Secondly, looking to the past efforts, too much of our time and energy have already been spent in addressing to the policy makers. The time has now come to take stock of the whole situation. Anyway, nothing will be lost and possibly something will be gained if we will do little less of advising policy makers for some time and pay a little more attention to the needs of the practitioners.

Fortunately, farmers have got some attention from us. What is required is even greater attention to the problems of communication with farmers. Translation of some of our articles in regional languages will go a long way in communication with farmers as also a concern for stating our conclusions plainly, simply and with conviction.

Productivity of agricultural labourers is a subject which needs much greater attention from us. With the development of APS, unionization of agricultural labour may well be inevitable. We should foresee these possibilities and help farmers and agricultural labourers in devising the right kind of wage policies.

The great need of the day is to train programme/project formulators and implementors. A whole new discipline on project identification, preparation, appraisal and implementation is emerging. It is easy for us to foster this discipline and help train programme/project managers.

Training of other people like input supply managers, processors, agricultural credit managers, agricultural scientists, extension workers and educators

in understanding the agricultural economy of the country and managing the tasks are absolutely essential for modernizing agriculture.

Agricultural management personnel have very high expectations from agricultural economists, who have accumulated a great deal of knowledge for more than half a century, to develop the relatively new discipline of management in agriculture in India. I am convinced that we have reached a state in India where with the abilities of agricultural economists, scientists, development managers and others, it is possible to modernize the agricultural system rapidly and efficiently.

I think modernizing the agricultural system is an urgent task and we as agricultural economists have an important role to play in this urgent and difficult task. This is the reason why I have chosen to speak on this otherwise unwieldy subject.

Let us get the agricultural system moving.

REFERENCES

1. V. N. Asopa and D. K. Desai: Assessment of the Requirements of High Yielding Seeds and the Development of the Seed Industry, Monograph No. 32, Centre for Management in Agriculture, Indian Institute of Management, Ahmedabad, 1973.

2. Pranab K. Bardhan, "Green Revolution and Agricultural Labourers", Seminar on Rural Development for Weaker Sections, Seminar Series—XII, Indian Society of Agricultural Economics, Bombay and Indian Institute of Management, Ahmedabad, 1974.

3. G. K. Chada: Production Gains of New Agricultural Technology, Panjab University, Chandigarh, 1979.

4. V. M. Dandekar, "Planning in Indian Agriculture", Presidential Address, *Indian Journal of Agricultural Economics*, Vol. XXII, No. 1, January-March 1967, pp. 7-23.

5. M. L. Dantwala, "Agricultural Policy in India Since Independence", in C. H. Shah and C. N. Vakil (Eds.): Agricultural Development of India: Policy and Problems, Orient Longman Ltd., Bombay, 1979.

6. John H. Davis and Ray A. Goldberg: A Concept of Agribusiness, Harvard University, Boston, 1957.

7. D. K. Desai: Credit Policy for Small and Marginal Farmers —A Second Look, Working Paper No. 398, Indian Institute of Management, Ahmedabad, 1981.

8. D. K. Desai, "Evolution of a Concept of Agri-business and Its Application", *Indian Journal of Agricultural Economics*, Vol. XXIX, No. 4, October-December 1974, pp. 32-43.

9. D. K. Desai: Management in Agricultural System, Indian Institute of Management, Ahmedabad, 1981 (unpublished).

10. D. K. Desai: Management in Rural Development, Centre for Management in Agriculture, Indian Institute of Management, Ahmedabad, 1981 (mimeo.).

11. D. K. Desai "Planning a Progressive Infrastructure", in The Future of Agriculture Technology, Policies and Adjustment, Oxford Agricultural Economics Institute, Oxford, 1974.

12. G. M. Desai, P. N. Chari and S. C. Bandopadhyay: Dynamics of Growth in Fertilizer Use at Micro Level, Monograph No.35, Centre for Management in Agriculture, Indian Institute of Management, Ahmedabad, 1973.

13. J. D. Drilon, Jr.: Agribusiness Management Resource Materials (Vol. I)—Introduction to Agribusiness Management, Asian Productivity Organization, Tokyo, 1971.

14. "Beyond Issue Prices", Editorial, *The Times of India*, August 2, 1982, Ahmedabad.

15. Robert E. Evenson and Dayanatha Jha, "The Contribution of Agricultural Research System to Agricultural Production in India", *Indian Journal of Agricultural Economics*, Vol. XXVIII, No. 4, October-December 1973, pp. 212-230.

16. P. S. George, V. V. Choukidar and M. B. Dave: Consumption Pattern and Preferences for Rice, Monograph No. 28, Centre for Management in Agriculture, Indian Institute of Management, Ahmedabad, 1972.

17. J. Price Gittinger: Economic Analysis of Agricultural Projects, Johns Hopkins University Press, Baltimore, 1972.

18. Ray A. Goldberg: Agribusiness Coordination: A Systems Approach to the Wheat, Soybean and Florida Orange Economics, Harvard University, Boston, 1966.

19. Tirath R. Gupta, "Nature of the Environment for the Forestry Sector in India", *The Indian Forester*, Vol. 104, No. 12, December 1977, pp. 787-796.

20. V. K. Gupta and P. S. George: Modernization of Rice Processing Industry in Punjab, Monograph No. 54, Centre for Management in Agriculture, Indian Institute of Management, Ahmedabad, 1974.

21. V. K. Gupta, T. P. Gopalswamy and D. P. Mathur: Studies in Modernization in Paddy-Rice System, Monograph No. 16, Centre for Management in Agriculture, Indian Institute of Management, Ahmedabad, 1969.

22. V. K. Gupta *et al.*: Marine Fish Marketing in India, Vols. I-VIII, Centre for Management in Agriculture, Indian Institute of Management, Ahmedabad, July 1981.

23. Government of India: Report of the National Commission on Agriculture, Part XI—Research, Education and Extension, Ministry of Agriculture and Irrigation, New Delhi, 1976.

24. Government of India: Report of the National Commission on Agriculture, Part XII —Supportive Services and Incentives, Ministry of Agriculture and Irrigation, New Delhi, 1976.

25. Governmnet of India: Sixth Five Year Plan, Planning Commission, New Delhi, 1981.

26. "Economics of Investment in Organization of Extension Services in Agriculture", Thirty-Ninth Conference Number, *Indian Journal of Agricultural Economics*, Vol. XXXIV, No. 4, October-December 1979, pp. 1-55.

27. "Forestry Development in India", Twenty-seventh Conference Number, *Indian Journal of Agricultural Economics*, Vol. XXII, No. 4, October-December 1967, pp. 135-195.

28. "Identification, Appraisal and Evaluation of Agricultural Projects", Thirty-eighth Conference Number, *Indian Journal of Agricultural Economics*, Vol. XXXIII, No. 4, October-December 1978, pp. 185-257.

29. "Issues in Agricultural Price Determination and Price Policy", Forty-first Conference Number, *Indian Journal of Agricultural Economics*, Vol. XXXVI, No. 4, October-December 1981, pp. 66-119.

30. "Labour Market in Rural Areas", Thirtieth Conference Number, *Indian Journal of Agricultural Economics*, Vol. XXV, No. 3, July-September 1970 and Vol. XXV, No. 4, October-December 1970.

31. "Location and Role of Agricultural Processing and Supply Industries", Thirty-sixth Conference Number, *Indian Journal of Agricultural Economics*, Vol. XXI, No. 4, October-December 1966, pp. 1-74.

32. "Price Spreads of Agricultural Commodities", *Indian Journal of Agricultural Economics*, Vol. XXXIV, No. 4, October-December 1979, pp. 130-204.

33. Dayanatha Jha, "Summary of Group Discussion—Economics of Investment in Organization of Extension Services in Agriculture", *Indian Journal of Agricultural Economics*, Vol. XXIV, No. 1, January-March 1980, pp. 46-48.

34. Dayanatha Jha, "Rapporteur's Report on Returns from Investment on Agricultural Research", *Indian Journal of Agricultural Economics*, Vol. XXXII, No. 3, July-September 1977, p. 241-247.

35. A. S. Kahlon and M. V. George, "The Role of Processing Industries in Agricultural Marketing Integration," *Indian Journal of Agricultural Economics*, Vol. XXI, No. 4, October-December 1966, pp. 41-53.

36. A. S. Kahlon *et al.*, "Productivity of Agricultural Research in India", Paper Presented at ADR/RIN Conference on Research Allocation and Productivity in National and International Agricultural Research, Virginia, January 26, 1975.

37. K. Kalirajan, "The Contribution of Location Specific Research to Agricultural Productivity", *Indian Journal of Agricultural Economics*, Vol. XXXV, No. 4, October-December 1980, pp. 8-16.

38. Uma Lele, "Marketing Studies in India", in Some Issues Emerging from Recent Breakthrough in Food Production, Cornell University, Ithaca, New York, 1971.

39. Lee R. Martin (Ed.): A Survey of Agricultural Economics Literature, Vols. 1, 2 and 3, University of Minnesota Press, Minneapolis, 1979.

40. Ravi J. Matthai, "Management, Education, Institutional Strategies and Process", in Suresh A. Seshan (Ed.): Professionalization of Management in Developing Countries, Indian Institute of Management, Ahmedabad, 1979.

41. John W. Mellor *et al.*: Developing Rural India: Plan and Practice, Cornell University Press, New York, Ithaca, 1968.

42. B. S. Minhas and T. N. Srinivasan, "Food Production Trends and Buffer Stock Policy", *The Statesman*, November 14 and 15, 1968.

43. A. T. Mosher: To Create a Modern Agriculture, Agricultural Development Council, New York, 1971.

44. N. T. Patel and D. S. Parmar, "Contribution of Extension Services in Agricultural Production", *Indian Journal of Agricultural Economics*, Vol. XXXIV, No. 4, October-December 1979, pp. 49-54.

45. C. G. Ranade, K. R. Rao, and D. C. Sah: A Study of Co-operative and Private Trade Channels in Groundnut Marketing, Monograph No. 92, Centre for Management in Agriculture, Indian Institute of Management, Ahmedabad, 1982.

46. Shreekant Sambrani and K. R. Picholiya: Area Planning: Precepts and Practices, Monograph No. 90, Centre for Management in Agriculture, Indian Institute of Management, Ahmedabad, 1981.

47. T. W. Schultz: The Economic Value of Education, Columbus University Press, New York, 1963.

48. C. H. Shah, "Rapporteur's Report on Agricultural Development in Developing Countries—A Comparative Study", *Indian Journal of Agricultural Economics*, Vol. XXII, No. 4, October-December 1967, pp. 1-3.

49. C. H. Shah, "Towards Modernization of Agricultural Production in India: Performance, Potentialities and Constraints", A Paper Presented at the Indo-Soviet Joint Symposium on Agricultural Productivity, Dushanbe (USSR), May 11-13, 1982.

50. C. H. Shah and T. R. Sundaram, "Research Problems in Agricultural Economics in India —An Analysis of Articles Published in the Indian Journal of Agricultural Economics, 1940-1964", *Indian Journal of Agricultural Economics*, Vol. XX, No. 2, April-June 1965, pp. 83-90.

51. Prakash M. Shingi, Sanjay Wadwalkar and Gurinder Kaur: Management of Agricultural Extension: Training and Visit System in Rajasthan, Monograph No. 96, Centre for Management in Agriculture, Indian Institute of Management, Ahmedabad, 1982.

52. Tarlok Singh, "Planning for Agriculture", in Shah and Vakil (Eds.): Agricultural Development of India: Policy and Problems, *op. cit.*

53. U. K. Srivastava: Project Planning, Financing, Implementation and Evaluation, Monograph No. 95, Centre for Management in Agriculture, Indian Institute of Management, Ahmedabad, 1981.

54. F. Welch: The Determination of the Returns to Schooling in Rural Farm Areas, 1959, Ph. D. Dissertation, University of Chicago, 1966 (unpublished).

55. Sterling Workman and Ralph W. Cummings, Jr: To Feed This World: The Challenge and the Strategy, Johns Hopkins University, Baltimore, Maryland, 1978, p. 440.