AgEcon SEARCH
RESEARCH IN AGRICULTURAL & APPLIED ECONOMICS

The World's Largest Open Access Agricultural & Applied Economics Digital Library

This document is discoverable and free to researchers across the globe due to the work of AgEcon Search.

Help ensure our sustainability.

Give to AgEcon Search

AgEcon Search
http://ageconsearch.umn.edu
aesearch@umn.edu

*Papers downloaded from **AgEcon Search** may be used for non-commercial purposes and personal study only. No other use, including posting to another Internet site, is permitted without permission from the copyright owner (not AgEcon Search), or as allowed under the provisions of Fair Use, U.S. Copyright Act, Title 17 U.S.C.*

Agris on-line Papers in Economics and Informatics

Volume IX Number 2, 2017

A Low Cost Irrigation System with Raspberry Pi – Own Design and Statistical Evaluation of Efficiency

Š. Koprda, M. Magdin, E. Vanek, Z. Balogh

Department of Computer Science, Faculty of Natural Sciences, Constantine the Philosopher University in Nitra, Slovakia

Abstract

Nowadays is automation a permanent part of ordinary households and subject to constant evolution. Standard of home automation is a smart (intelligent) home that meets the requirements of the owner and gives him considerable comfort. To the offer of solutions, the intelligent home includes, are control of lighting and temperature, camera system or irrigation system. Technologies of an irrigation system are being developed with an emphasis on smart management of water, advanced features and remote control of the irrigation system. The aim of this paper is to point out the new trends in irrigation systems. In this paper, we describe our own design, implementation and statistical evaluation of low-cost solutions for a smart irrigation system. This is a higher level of automation through intelligent devices with the requirements for user experience and quality of life. This device is according to our design and subsequent testing able to autonomously control three independent irrigation areas and the user experience is ensured by using the web interface (application runs on smartphones with system Android)..

Keywords

Smart irrigation system, raspberry, smartphone, statistical analyze.

Koprda, Š., Magdin, M., Vanek, E. and Balogh, Z. (2017) "A Low Cost Irrigation System with Raspberry Pi – Own Design and Statistical Evaluation of Efficiency", *AGRIS on-line Papers in Economics and Informatics*, Vol. 9, No. 2, pp. 79 - 90. ISSN 1804-1930. DOI 10.7160/aol.2017.090207.

Introduction

From the mid-20th century onwards, the concept of agriculture has changed substantially. It has become an economic activity and it is no longer a subsistence activity that produces food for the family who works the land. Between 1960 and 1995, the global use of nitrogen fertilizer increased and agriculture became an activity intended to maximize profit (Pereira & Marques, 2017). Agriculture is one of the most crucial factors in sustaining human life on Earth. Also, it is a source of occupation for most people in many countries (Kathpal et al., 2017). However, in these current climate conditions is an acute shortage of agricultural water and food demand is increasing because of growing number of population and economic growth (Gheysari et al., 2015).

The growing demand for food and fiber production along with the limited freshwater resources and the intrinsic uncertainty in rainfall patterns, due to climate variability and change, has focused a great attention on agricultural water management. Irrigated agriculture has the highest rate of consumption of the freshwater resources (about 70%). In arid and semiarid climates, irrigation is essential for crop production wherein a crop failure or a significant reduction in the amount of yield would most likely occur without irrigation (Haghverdi et al., 2017). In agriculture, irrigation is an essential process that influences crop production (Kumar & Behera, 2015). Since that agricultural producers want to maximize revenues by maximizing production and aim to minimize costs and inputs (or resources) to ensure maximum profit. Inputs include labour, fertilizers, pesticides, machine utilization, plants or seeds and irrigation supply (Spedding, 2003). Consequently, there is a mounting pressure on irrigation systems to apply water more efficiently to ensure water resources availability and sustainability (Sadeghi, et al., 2017).

Recently various irrigation systems were designed to improve water use efficiency. Some of these systems are such as a water-saving irrigation strategy, which imposes a certain level of water stress to a crop either during a particular period or throughout the whole growing season,

with the expectation that any yield reduction is negligible compared to the water benefits gained from the water saving (Eck et al., 1987). However, irrigation systems involve an appropriate scheduling of irrigation, because of crop sensitivity to water deficit changes with the phenological stages (Istanbulluoglu, 2009, Patanè et al, 2017).

We can say that the issue of irrigation in actual climatic conditions is not a new topic. Various experts and researchers of Agriculture in cooperation with IT experts are for a long time investigating how can be intelligent systems applied in agriculture to not only increase revenue but also to avoid damage to the surrounding landscape. In this section, we compare various systems which have been proposed recently and are related to this topic. When we created the report of available systems we found one important thing - all these low-cost solutions relate mainly to drip irrigation. Even the proposals presented by renowned experts from floodplains as is India are focused on issues of drip irrigation. This is because in these areas are abundance of water, and the sufficient amount of water (often even excessive) is only in time of the monsoon rains. In our proposal, we examined the issue of irrigation of lawns and rock gardens, which can be used as in family houses, as well as for city parks and thus additionally saving costs for water, which is especially important for big cities.

In the year 2013 Gao et al. design an intelligent irrigation system based on wireless sensor networks and fuzzy control. The system mainly consists of wireless sensor networks and the monitoring center. The core of this system is microprocessor 8051, which provides cooperation between other hardware components. All of the nodes in monitoring area use solar power, collect the information of soil moisture, together with the growth of information in different crops different periods. Soil moisture content and the deviation rate of change of deviation are taken as input variables of the fuzzy controller, fuzzy control, and the regular database is established for the fuzzy irrigation control system. The Monitoring Center receives the data transmission from wireless sensor network node, and output of information irrigation water demands to the relay via a wireless sensor network to control opening and closing time of the valve in crop areas. The experimental results show that the system has a stable and reliable data transmission, which achieve real-time monitoring of soil on crop growth, give a right amount of irrigation crops based on information growth, which has broad application prospect (Gao et al, 2013). This system is designed to irrigate large areas. This designed system does not use the system of drip irrigation but large sprinkler. Gao et al. in their paper, however, does not provide the statistical evaluation of the effectiveness of such a system.

Kumar as irrigation system used also microprocessor 8051. Kumar used the microcontroller for the realization of intelligent drip irrigation system which will allow irrigation to take place in zones where watering is required while bypassing zones where adequate soil moisture is indicated. Another feature of this prototype is pesticide sprinkling system where the mixture is prepared in required proportion deserved by the plants automatically (required ratio is preloaded), thereby preventing the human mistakes to the maximum extent (Kumar et al., 2013). The disadvantage of this system we see currently in the use of pesticides. This system is but very simple and efficient for home realization.

Galande & Agrawal design in 2013 controlled drip irrigation system. They use as a core of intelligent irrigation system the microcontroller ARM7TDMI-S with microprocessor 89C51. The present proposal is a model to modernize the agriculture industries at a mass scale with optimum expenditure. Using this system, one can save manpower, water to improve production and ultimately profit. The developed irrigation automation system can be proposed to be used in several commercial agricultural productions since it was obtained at low cost and in reliable operation. This application of sensor-based site-specific irrigation has some advantages, such as preventing moisture stress of trees, diminishing of excessive water usage, ensuring of rapid growing weeds and derogating salification. If different kinds of sensors (such as temperature, humidity, and etc.) are involved in such irrigation in future works, it can be said that an internet based remote control of irrigation automation will be possible. The developed system can also transfer fertilizer and the other agricultural chemicals (calcium, sodium, ammonium, zinc) to the field with adding new sensors and valves (Galande & Agrawal, 2013).

Jadhav & Hambarde used for control of intelligent irrigation system microcomputer Raspberry Pi. An automated irrigation system was developed to optimize water usage for agricultural crops. The system has a distributed wireless network of soil moisture, humidity and temperature sensors. Their goal was to develop a system to control the water motor automatically, monitor the plant

growth using various parameters, spray fertilizers if needed and develop an Android app. The main idea of this is to understand how data travels through a wireless medium transmission using wireless sensor network and monitoring system (Jadhav & Hambarde, 2015).

Al-Ammri & Ridah used as an intelligent core for its designed irrigation system microcontroller AT89c51. This model of irrigation system is based on wireless sensor network (WSN). The user-controller provided with information from the receiver board (master) that transmitted sensors data (as the current parameter of the plant) through the transmitter board (slave). The receiver board AT89C51 used to receive a real-time sensor data from a transmitter to a PC monitor via serial connection and forming a database for future uses. Matlab/ Simulink and Neural Network was used for the control system to improve the performance (Al-Ammri & Ridah, 2014).

Shaikh et al., in 2016 proposed an embedded system for automatic control of irrigation. The system has wireless sensor network for real-time sensing and control of an irrigation system. This system provides uniform and required level of water for the garden and it avoids water wastage. This system is intended to create an automated irrigation mechanism which turns the pumping motor ON and OFF on detecting the dampness content of the earth. In this embedded system are interfacing Arduino board ATmega328 microcontroller through the temperature sensor, soil moisture sensor and interfacing to GSM (Shaikh et al., 2016).

Adewuyi developed a model of an intelligent irrigation system with microcontroller PIC16F877A. This microcontroller was used for the control processes programmed with 'Flowcode' flowchart basics. The performance is tested, and compared with the performance of the conventional irrigation system using Proteus VSM environment which gives an improved performance over the existing conventional irrigation system and saves energy (Adewuyi & Oko-Oboh, 2016). This system is designed for large irrigated areas.

Angal (2016) designed a home automation system which is based on Raspberry Pi, Arduino microcontrollers, and zigbee and relay boards to water plants. Raspberry Pi acts as the control block in the automatic irrigation system to control the flow of motor. The commands from the Arduino are processed by Raspberry Pi. Zigbee module is used for communication between the Raspberry Pi and Arduino. This realization presents an efficient and fairly cheap automation irrigation system. By using moisture sensor can be the irrigation system made smart and automated. The system once installed has no maintenance cost and is easy to use. This solution is only the model and it was not used in real conditions.

Madli (2016) used as microcontroller unit PIC 18f4520. The main function of monitoring unit is to monitor the field parameters; soil moisture, soil pH, air temperature and humidity. The microcontroller unit is realized by using PIC16f877A, which is responsible for collecting the parameters sensed by sensors, and transfer to the server mobile phone for processing via the Bluetooth interface using HC-05 Bluetooth module. Soil moisture and pH sensors are inserted in the soil, whereas temperature and humidity sensors measure the air temperature and humidity. These sensors act in a semi-passive mode as they are powered by the battery. The monitoring unit is placed in the field to monitor the agricultural parameters. This intelligent irrigation system from Madli is drip irrigation system (without sprinklers).

In this paper, we designed and implemented smart irrigation system, which is destined for automatic irrigation of grass area. Such an automatic irrigation system can now be taken for granted for most of ornamental gardens and lawns.

The main advantages of irrigation:

1. saving time (automatic irrigation system irrigates automatically according to the program, even when the house owner is away from home),
2. saves water,
3. irrigated if it is only necessary,
4. irrigates also difficult to reach areas.

Smart irrigation tells that the whole system is controlled by autonomous mean to automatically control the whole irrigation system whether the farmer is not present on his farm field and sends messages to the farmer about the information of farm field and change in operation of the farm field. Which require no worker for operating, and also less waste of water (Kumar & Behera, 2015).

The main role of irrigation system is to provide the lawn enough amount of water for its healthy growth. It is used mainly in the summer months during dry weather. The quality irrigation system should meet several important functions. The lawn should be irrigated evenly, without dry places. The system should irrigate only when necessary.

It is useless to water the lawn when it's raining. Automatic irrigation system which is installed in gardens is a network of pipes, wiring, and sprinklers that are generally stored beneath the surface of irrigated area. This system also includes other components, which provide automatic operation without human intervention, for example, solenoid valves, control unit and various sensors of weather. An indispensable part of any irrigation system is a control unit which is connected by wires with the sensors and solenoid valves. The user can, therefore, use the control unit set the duration of irrigation, frequency of irrigation or shutdown of irrigation due to rain.

Generally, (important) factors of irrigation system:

1. Consumption of water for irrigation system (content of irrigated area we multiplied by number 35, which represents an average dose of water per square meter per week in liter). Consumption of water for the adequate irrigation of the lawn, however, depends from the season.
2. The rate of flow - optimal value is 1 liter/ at a pressure 3.5- 5.5 bar with the average of input pipe 5/4“.
3. Time of irrigation – great time for irrigation is morning, the temperature of the air is low and the water does not evaporate but soaks into the ground. Saving of water is then 30 – 40%.

Based on these general conditions it is possible to design the automatic irrigation system. Of course, in order that the system should have success rate of at least 90%, it is necessary to also consider other factors which have the influence on the operation of smart irrigation system - such as humidity.

Each irrigation system has certain functions. For our irrigation system we require the following features:

1. Control of three independent circuits/valves,
2. Control according to ground humidity,
3. Control according to time schedule,
4. Deactivation of irrigation system due to rain,
5. Solar control, temperature, humidity and pressure of air
6. Prediction of weather,
7. Measuring the flow of used water,
8. Independent intelligent control,
9. Additional remote control via the Internet,
10. Additional manual control in case of internet failure.

Materials and methods

In our case, we decided to place the smart irrigation system so that it can irrigate an area with the size of 60 square meters in front of the family house.

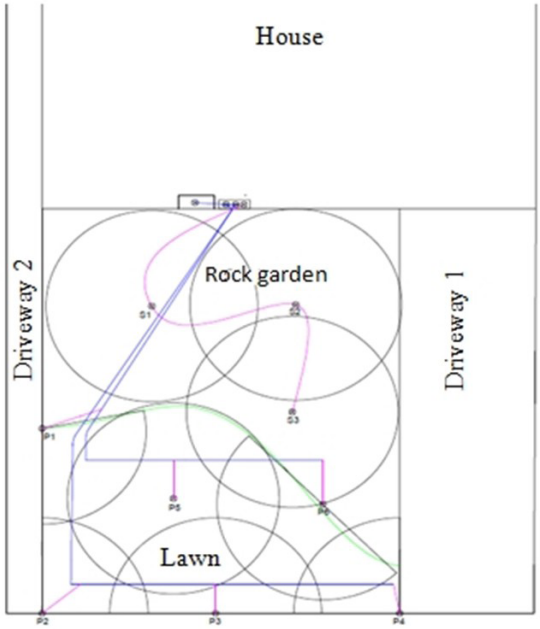

Source: Own creation

Figure 1: The layout plan of sprinklers.

This area is divided into the area with lawn and to the area with an ornamental rock garden. These areas are approximately the same, the area with ornamental rock garden (considering to the type of plants planted) has low conditions to the irrigation. For this area, we decided because of its size (need for irrigation system because of saving time) and undulation of its surface (the need for a uniform irrigation). The first step of realization is a proposal plan of irrigation for irrigation area with neighbouring objects (house, footpath, and road). We denote area for irrigation together with connection to the water source. We select suitable sprinklers on the basis of their throw distance, the range of zone and working pressure. In their location, we make sure that the entire area was covered with the sprinklers. Each of sprinklers must cover with the stream of water the area to the nearest sprinkler. For connection of the sprinklers is used a pipe, we choose the shortest distance (longer pipes can cause pressure losses). The pipe is deposited to a depth of 20-30 cm, this step solves the problem of possible freezing. For optimal conditions of pressure in the whole irrigation system, we divided the system into three branches. One branch will irrigate ornamental rock garden and the other

two are designed for the lawn. We used 9 irrigation sprinklers (range of zone 3,5 m) from the company Hunter. On the one branch, we used 3 sprinklers.

In Figure 2, there is a block diagram of designed irrigation system from the point of view of branching water.

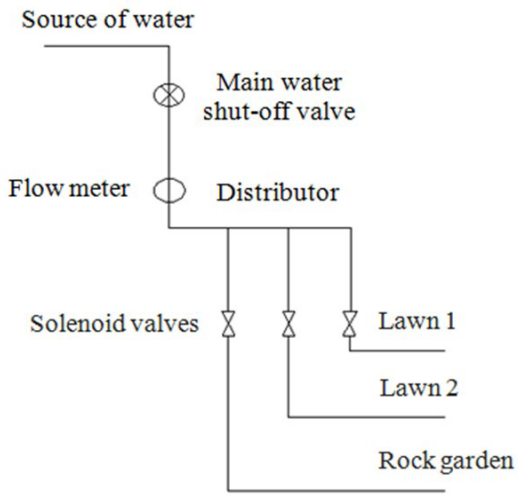

Source: Own creation

Figure 2: Block diagram – branches of water.

This block diagram represents a low-cost solution. To ensure control of individual sections – irrigation areas, we use solenoid valve PGV - 101MM from Hunter, an operating voltage of 24V with a working pressure of 1.4 to 10 bar. We can operate solenoid valve manually, adjust of its flow, disassemble and clean. In Figure 3 is shown the real connection of solenoid valves.

Source: Own creation

Figure 3: Connection of solenoid valves.

The block diagram in Figure 2 is a low-cost solution. However, in order for the system to work as the intelligent device, it is necessary to also consider other components. In Figure 4 is block scheme of the smart irrigation system with all hardware components.

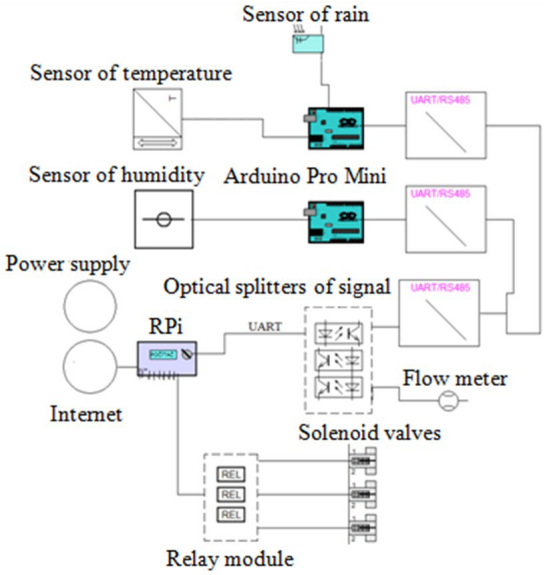

Source: Own creation

Figure 4: Block diagram (up) and her realization of smart irrigation system with all hardware components (down).

For the realization of our irrigation system is need to dispose of these components:

1. transformer,
2. microcomputer Raspberry Pi 2 model B as control unit,
3. relay module,
4. sensor with combination to the weather (temperature, pressure, humidity and solar radiation),
5. humidity sensor,
6. flow meter,
7. sensor of rain,
8. converter UART/ RS485
9. microcontroller Arduino Pro Mini,
10. serial port RS232 Mini,

11. optical splitters of signal,
12. three-position switch,
13. appropriate cabling.

The *Control Unit Raspberry Pi* is the centre of an irrigation system. It determines when is appropriate for individual valves to open or close. The control unit opens the valves in order (always only one valve at a time). This step was made based on the optimum value of the pressure in the water pipes. In the case of low pressure the individual sprinklers would not have the required amount of water or could not even come out of the ground.

Arduino Pro Mini is a microcontroller based on the ATmega328 microchip. We used it to the conversion of signals sent from various sensors to communication signals UART (Universal asynchronous receiver/transmitter).

Relay module – because of control signals from RPi this relay module create connection between contacts with using AC24V to open/close of solenoid valves.

Optical splitters of signal for RS232 - ensures in order were not spurious signals from the outside. Significantly reducing the risk of damage input circuits RPI.

Serial port RS232 - it is used as a communication interface of computers and other electronics.

Converter UART/RS485 - communication converter of serial line UART to the interface RS485. It is designed for creation of a two-wire and multipoint join.

Transformer - allows you to effectively reduce the voltage from 230V to 24V so that we can use it to power other hardware components (controller, solenoid valves ...). For activities of other electrical circuits is the output voltage of the transformer directed through a stabilizer and adjusted for required voltage level.

Flow meter - it uses the principle of sensing mechanical speed of the magnet on turbine through the so-called Hall sensors. RPI sensing individual pulses, which can determine the water flow. Each pulse is approximately 76.6 ml water overflow.

Humidity sensor of ground - measures the volume of water which is contained in the soil based on the electrical resistance between two electrodes, which are in the sensor arm.

Sensor with combination to the weather - it consists of a humidity sensor and temperature of air (HTU21D). It can sense the temperature in the range of -40 °C to +125 °C for 24 hours. The air humidity is indicated in percentage. The last part of the module is a pressure sensor (BMP180). Value of pressure with other measurements can be produced by weather forecasts.

Sensor of rain - it contains contact field, while the presence of water on the contact field causes the conductivity sensor detects rain and irrigation system will not initiate watering.

The software of this smart irrigation system was divided into the software for control of hardware components (sensors, relay module) and software for control of Raspberry Pi. Control of hardware components was realized by using two microcontrollers Arduino Pro Mini. This microcontroller communicates using communication bus UART and is separate of optical signal splitters for the protection of control computer Rpi.

The basic part of software was created in the programming language PHP. We have created a series of subroutines which we interconnected. For function of measuring time we have created a program that collects data from all the sensors and stores them in a MySQL table. Then, using the CRON table this program can repeat the same activities every five minutes. By this we gained the essential function of measuring data on a regular basis. Switching on and off the valve is then carried out based on measured values in the database.

The next step was the proposal of the system logic. To the individual data in our database we assigned a certain weight, so we divided these data on the basis of importance. For example, the highest weight was assigned to the rain sensor, which immediately signalled a possible rain and turn off the irrigation system. The second type of weight was assigned to the humidity sensor, but we added the statement, which assesses the impact of humidity for the last eight hours. The lowest weight was assigned to sensor with combination to the weather which senses ambient air temperature, pressure and intensity of sunlight.

As the pressure that of the pump is never constant and the individual circuits does not supply the same amount of water at the same time, we cannot increase the amount of water by using the time constant. By using a flow meter, it can raise or lower the amount of water in liter, to achieve equal distribution of water on each valve. That is, in case of very high temperatures in the air during a few days in a row, we can increase the amount of water used for irrigation e.g. about 50 liter

on each valve for achieving uniform irrigation.

Web application – for control of intelligent (smart) irrigation system we created several options. First option is manual control of irrigation system using three switches, which are installed on device for each solenoid valve. A second option is indirect control using automatic mode and the last option is remote control using web application. The web application we created in PHP and to the work with the data we used phpMyAdmin which allows work with the MySQL database via the web interface. It allows creating, deleting, editing, filling databases or spreadsheets. After launching the web application users can see the following screen:

Source: Own creation

Figure 5: Initial screen of web application.

The initial screen consists of three buttons, intended for manual control each of solenoid valves by using web applications. When activating one valve it automatically turns off other valves and the names of buttons are changed. By the fourth button called Auto mode, we activated each valve on the basis of the measured values from the weather sensors. By activating the automatic mode, the possibility of manual activation of valves is deactivated. To check the measured values of the sensors, have their statements added to the web application (Figure 6).

Based on the measured values we can observe current flow, time and quantity of last irrigation and evaluate the costs associated with irrigation or adjust the quantity of water intended for irrigation. This web application was in the first step available only from local network but after installing VPN it is possible to use remote access to this web application. In this case, we access the web application securely using login details.

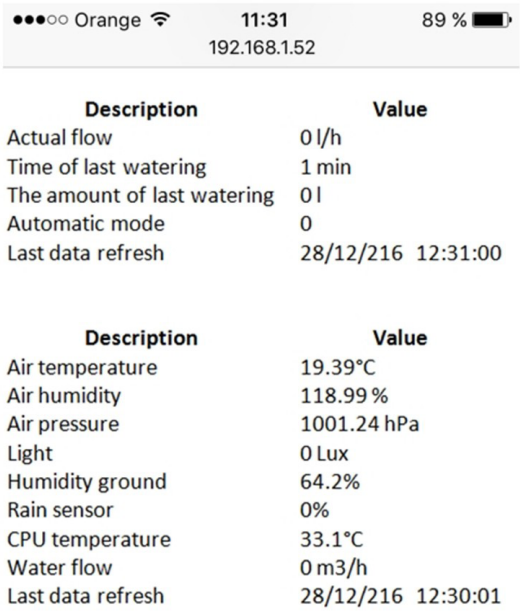

Source: Own creation

Figure 6: Web application.

The classical irrigation system is controlled using irrigation clock. This clock, however, cannot determine to what extent is the irrigation sufficient because it does not measure the value of ground humidity. We cannot determine whether the irrigation was needed in times of rain because it does not have the rain sensor. Consequently, we can say that the control of irrigation using the clock is inefficient. The control unit in conjunction with the weather sensor is an appropriate solution to control our irrigation system. As mentioned above, our irrigated area is 60 m2 and is divided into three sections and weekly water consumption of one section is 600 liter. For optimum humidity value, we divided the weekly irrigation schedule into four days. Thus, the consumption of water in one day to one section is 150 liter. Our irrigation program will begin at 6 clock in the morning because irrigation is the most effective in the early morning. At that time, the control unit retrieves the data from the sensors and evaluates them. To turn the irrigation on must be met these following conditions:

sensor of rain < 0.1,

sensor of ground humidity < 35%.

If the conditions are met, the control unit using the relay module opens valve 1 that is automatically closed after overflowing of 150 liter of water.

In the case when sensor of rain > 0.1 and sensor of ground humidity > 35%, the sensor of ground humidity indicating the need for irrigation, but the rain sensor with a greater weight of values indicates that it is raining. In the case of activating the irrigation would come to wasteful use of irrigation water, therefore the irrigation is automatically turned off. The third valve is used for the rock garden, which is less demanding for water as the lawn and irrigation does not need to be carried out in the early morning. Therefore, the amount of water which we used for irrigation of rocks was modified to 100 liter. Irrigation program for rock garden will begin when the complete irrigation of lawn by using valves 1 and 2 is done and is switched off after reaching 100 liter flow. In the case of high air temperatures, we subsequently decided to manually turn on irrigation of rocks garden in the evening, which will also serve to refresh the air around the house. In the spring and autumn months, we must adjust the lower limit of ground humidity, because for the lawn is appropriate a less intensive irrigation during these periods. Source codes of control functions are written in programming language C.

Results and discussion

The basis of irrigation system reliability is to analyze the measurement data of weather and its deviations. We focused particularly on the reality, regularity, and irregularity of measurement data, while we were looking for mistakes of measurement in the irrigation system. We can say, the mistakes of measurement = measurement of value – reference value. The mistakes of measurement were divided into three main groups:

Systematic mistakes – mistakes of measurement devices (source of the error is unknown), the mistakes that were stemming from the measurement. These mistakes can be removed with thoroughgoing devices and with the suitable method of measurement.

Random mistakes - they are caused by random external influences. They cannot be completely eliminated, but they can be determined by repeated measurements.

Personal mistakes - defects caused by poor attention from the experimenter, false readings of the devices and others. Removing is in the diligence of the work.

Our smart irrigation system has been tested on the ground area in front part of the family house. We tested correct functioning of turn off/on relay modules and correct functioning of turn off/on of solenoid valves based on the measurement data from sensors of weather and ground humidity. For testing, we chose a short period of time since 28.07.2016 to 01.08.2016. During operation of smart irrigation system may occur a sequence of different events/states. We have assigned identification code (Table 1) to these events.

Code	Event
10	Valve 1 is activated – manual control via web
11	Valve 2 is activated – manual control via web
110	Valve 1 is deactivated –manual control via web
111	Valve 2 is deactivated – manual control via web
12	Valve 3 is activated – manual control via web
112	Valve 3 is deactivated – manual control via web
20	Activated auto mode via web
120	Deactivated auto mode via web
30	Valve 1 is activated – automatic
31	Valve 2 is activated – automatic
32	Valve 3 is activated – automatic
130	Valve 1 is deactivated – automatic
131	Valve 2 is deactivated – automatic
132	Valve 3 is deactivated – automatic
21	Error in the evaluation of data

Source: Own creation

Table 1: Event codes

During the entire test period, we used the auto mode of the irrigation system. Irrigation of each section was carried out automatically under specified conditions. The measurement of data was carried each 5 minutes and these data were enrolled in the database. The data measured during the test period can be seen in Table 2.

In Table 2, we stated the measurement data of the day 29.7.2016. Irrigation system during this day was working following:

1. around 6:00 was conducted check of conditions - ground humidity was < 30%. The condition is true, the control unit using the relay module opened valve 1 and flow meter began to count impulses (1 impulse = 76.6 ml overflow of water). From the table can be seen an increase of the ground humidity.

ID	Date and Time	Air temperature	Air humidity	Air pressure	Light (lux)	Ground humidity	Rain sensor	Temperature Rpi	Overflow of water (m3/h)	Overflow of water (l/h)	Solenoid valve 1	Solenoid valve 2	Solenoid valve 3	Event code
11427	29.7.2016 4:40	16.965	88.41	98561	0	27.3	0	44.4	0	0	0	0	0	20
11428	29.7.2016 4:45	16.965	88.49	98548	0	27.3	0	45.5	0	0	0	0	0	20
11429	29.7.2016 4:50	17.025	88.38	98548	0	27.3	0	44.4	0	0	0	0	0	20
11430	29.7.2016 4:55	16.965	87.73	98555	0.42	27.3	0	44.4	0	0	0	0	0	20
11431	29.7.2016 5:00	16.835	87.89	98553	1.25	27.3	0	45.5	0	0	0	0	0	20
11432	29.7.2016 5:05	16.84	87.57	98549	3.33	27.3	0	44.9	0	0	0	0	0	20
11433	29.7.2016 5:10	16.865	86.7	98542	7.8	27.3	0	44.9	0	0	0	0	0	20
11434	29.7.2016 5:15	16.74	88.18	98555	14.17	27.2	0	44.4	0	0	0	0	0	20
11435	29.7.2016 5:20	16.75	88.17	98559	24.58	27.5	0	44.9	0	0	0	0	0	20
11436	29.7.2016 5:25	16.76	88.29	98561	40.42	27.6	0	45.5	0	0	0	0	0	20
11437	29.7.2016 5:30	16.74	87.44	98561	61.67	27.7	0	45.5	0	0	0	0	0	20
11438	29.7.2016 5:35	16.55	88.54	98559	87.08	27.8	0	44.9	0	0	0	0	0	20
11439	29.7.2016 5:40	16.76	88.86	98569	115.83	28.1	0	44.9	0	0	0	0	0	20
11440	29.7.2016 5:45	16.88	88.77	98558	143.75	28.5	0	44.4	0	0	0	0	0	20
11441	29.7.2016 5:50	16.845	89.48	98556	175.83	28.4	0	44.9	0	0	0	0	0	20
11442	29.7.2016 5:55	16.97	90,27	98558	209.58	28.4	0	44.4	0	0	0	0	0	20
11443	29.7.2016 6:00	17.185	90,84	98562	245.83	28.4	0	44.9	4.485	74.75	1	0	0	30
11444	29.7.2016 6:05	17.445	93.35	98558	287.08	32.3	0	45.5	4.6566	77.61	1	0	0	30
11445	29.7.2016 6:10	17.57	93.6	98559	333.33	34.8	0	44.9	5.049	84.15	0	1	0	130/31
11446	29.7.2016 6:15	17.675	93.59	98561	367.5	44.6	0	44.9	4.035	67.25	0	1	0	31
11447	29.7.2016 6:20	17.675	93.66	98557	395.83	45	0	44.9	3.2448	54.08	0	0	1	131/32
11448	29.7.2016 6:25	17.775	93.73	98553	448.33	44.3	0	46	2.7612	46.02	0	0	1	132
11449	29.7.2016 6:30	17.97	92.79	98556	507.5	43.7	0	44.9	0	0	0	0	0	20
11450	29.7.2016 6:35	18.145	92.61	98559	547.92	43.4	0	44.4	0	0	0	0	0	20
11451	29.7.2016 6:40	18.28	91.85	98542	625.42	42.9	0	44.9	0	0	0	0	0	20
11452	29.7.2016 6:45	18.455	92.12	98563	683.33	44.6	0	44.9	0	0	0	0	0	20
11453	29.7.2016 6:50	18.565	91.93	98551	632.08	44.6	0	44.9	0	0	0	0	0	20
11454	29.7.2016 6:55	18.68	91.33	98549	850.42	44.6	0	44.9	0	0	0	0	0	20
11455	29.7.2016 7:00	18.48	92.02	98551	682.92	45	0	44.9	0	0	0	0	0	20
11456	29.7.2016 7:05	18.75	91.25	98558	652.5	44.3	0	44.9	0	0	0	0	0	20
11457	29.7.2016 7:10	18.88	90.89	98559	767.92	43.7	0	45.5	0	0	0	0	0	20
11458	29.7.2016 7:15	18.79	91.48	98547	622.92	43.4	0	44.4	0	0	0	0	0	20
11459	29.7.2016 7:20	18.745	92.3	98525	945.42	42.9	0	44.4	0	0	0	0	0	20
11460	29.7.2016 7:25	19.095	91.73	98524	1185.83	42.6	0	44.4	0	0	0	0	0	20
11461	29.7.2016 7:30	19.565	90.23	98530	1372.92	42.4	0	44.4	0	0	0	0	0	20
11462	29.7.2016 7:35	19.905	88.42	98537	1547.92	42.2	0	45.5	0	0	0	0	0	20
11463	29.7.2016 7:40	20.095	88.03	98550	1364.17	42.1	0	49.9	0	0	0	0	0	20
11464	29.7.2016 7:45	19.995	87.51	98546	1201.67	41.9	0	44.4	0	0	0	0	0	20
11465	29.7.2016 7:50	20.31	89.28	98538	1355.83	41.8	0	44.4	0	0	0	0	0	20
11466	29.7.2016 7:55	20.29	87.57	98547	1596.67	41.6	0	44.4	0	0	0	0	0	20

Source: Own creation

Table 2: The measured data during the test period.

2. Once the value of impulses exceeds 150 liter overflow of water, the control unit closes valve 1 and opens valve 2 and re-starts counting impulses overflow of water to a value of 150 liter. This procedure is repeated for the valve 3, except flow-through of water - we set for valve 3 to value 100l

If we count the values from the flow (Table 2) at the opening of the valve 1, their sum is 152.36 liter.

It is possible that this inaccuracy was created by delay in closing the solenoid valve or inaccurate measurement of the flow meter. In the sum of the flow of water (valve 3 is open) is the value 100.1 liter. The difference in the deviations could be caused by different conditions of pressure in the pipes for irrigation. Furthermore, we focused on the reliability of measurement data from sensors of weather and proper operation of the rain sensor.

In Table 3, we stated the measurement data of the day 01.08.2016. Irrigation system during this day was working following:

1. around 6:00 was conducted a check of conditions – sensor of rain was > 0.1. The control unit on the basis of the measured values of the rain sensor evaluated that at that time it rains and turning on irrigation is not necessary.
2. The control unit keeps all three valves closed.

The whole course of the activities of a smart irrigation system is in the following Figure 7. From Figure 7 we can deduce that during tested period the ground humidity has increased together with the flow rate of water. We can also observe the alternation of day and night based on air temperatures and fall and rise of ground humidity. In the last day of the test period, we recorded rainfall (the blue curve), which in turn caused an increased value of ground humidity.

ID	Date and Time	Air temperature	Air humidity	Air pressure	Light (lux)	Ground humidity	Rain sensor	Temperature Rpi	Overflow of water (m3/h)	Overflow of water (l/h)	Solenoid valve 1	Solenoid valve 2	Solenoid valve 3	Event code
12263	1.8.2016 5:20	19.235	95.52	98374	8.75	42.2	6.2	45.5	0	0	0	0	0	20
12264	1.8.2016 5:25	19.235	94.92	98377	13.33	42.2	5.9	45.5	0	0	0	0	0	20
12265	1.8.2016 5:30	19.145	95.68	98374	21.25	42.2	5.5	45.5	0	0	0	0	0	20
12266	1.8.2016 5:35	19.6	94.91	98375	30.83	42.1	5.5	45.5	0	0	0	0	0	20
12267	1.8.2016 5:40	19.155	94.52	98386	42.92	42.2	5.3	45.5	0	0	0	0	0	20
12268	1.8.2016 5:45	19.125	94.91	98389	66.25	42.1	5.1	46	0	0	0	0	0	20
12269	1.8.2016 5:50	19.5	96.16	98385	103.75	42.2	4.6	44.9	0	0	0	0	0	20
12270	1.8.2016 5:55	18.85	94.97	98403	130.42	42.1	4.2	45.5	0	0	0	0	0	20
12271	1.8.2016 6:00	18.955	95.83	98404	138.75	42	4	45.5	0	0	0	0	0	20
12272	1.8.2016 6:05	18.96	95.64	98419	167.92	42	4	45.5	0	0	0	0	0	20
12273	1.8.2016 6:10	18.96	95.72	98420	180	41.9	4	45.5	0	0	0	0	0	20
12274	1.8.2016 6:15	18.925	95.43	98419	213.33	42	4	44.9	0	0	0	0	0	20
12275	1.8.2016 6:20	18.97	95.12	98423	265	41.9	4.1	45.5	0	0	0	0	0	20
12276	1.8.2016 6:25	19.3	95.02	98429	365.83	41.8	4.1	46.5	0	0	0	0	0	20
12277	1.8.2016 6:30	19.045	95.72	98441	445.83	41.7	4.1	45.5	0	0	0	0	0	20
12278	1.8.2016 6:35	19.16	96.3	98441	512.92	41.6	4.1	45.5	0	0	0	0	0	20
12279	1.8.2016 6:40	19.34	95.1	98453	8´593.75	41.6	3.9	46	0	0	0	0	0	20
12280	1.8.2016 6:45	19.36	95	98449	658.75	41.7	3.8	44.9	0	0	0	0	0	20
12281	1.8.2016 6:50	19.36	96.26	98446	702.92	41.7	3.6	46	0	0	0	0	0	20
12282	1.8.2016 7:00	19.685	95.35	98454	768.75	41.8	3.2	44.4	0	0	0	0	0	20
12283	1.8.2016 7:05	19.975	93.08	98452	880.83	41.7	2.8	44.9	0	0	0	0	0	20
12284	1.8.2016 7:10	20.15	90.86	98452	892.08	41.7	2.7	45.5	0	0	0	0	0	20
12285	1.8.2016 7:15	20.49	90.02	98446	1037.08	41.6	1.7	44.9	0	0	0	0	0	20
12286	1.8.2016 7:20	20.5	89.42	98453	1216.25	41.7	1.1	44.4	0	0	0	0	0	20
12287	1.8.2016 7:25	20.795	89.04	98473	894.58	41.8	0.8	44.9	0	0	0	0	0	20
12288	1.8.2016 7:30	21.075	86.09	98493	777.5	41.7	0.6	45.5	0	0	0	0	0	20
12289	1.8.2016 7:35	20.99	86.58	98499	680.83	41.6	0.5	45.5	0	0	0	0	0	20
12290	1.8.2016 7:40	20.63	88.56	98501	953.33	41.6	0.5	45.5	0	0	0	0	0	20
12291	1.8.2016 7:45	20.68	89.15	98506	1291.25	41.6	0.4	45.5	0	0	0	0	0	20
12292	1.8.2016 7:50	21.8	87.99	98500	1235.83	41.6	0.4	46	0	0	0	0	0	20
12293	1.8.2016 7:55	21	88.3	98506	1328.33	41.6	0.3	45.5	0	0	0	0	0	20
12294	1.8.2016 8:00	21.625	83.8	98500	1692.92	41.4	0.3	45.5	0	0	0	0	0	20
12295	1.8.2016 8:05	21.22	85.96	98517	1559.58	41.4	0.2	44.4	0	0	0	0	0	20
12296	1.8.2016 8:10	21.59	83.49	98528	1343.75	41.4	0.2	45.5	0	0	0	0	0	20
12297	1.8.2016 8:15	21.46	83.46	98513	1707.08	41.4	0.1	45.5	0	0	0	0	0	20
12298	1.8.2016 8:20	21.335	82.85	98535	1796.25	41.4	0.1	45.5	0	0	0	0	0	20
12299	1.8.2016 8:25	21.195	84.59	98525	1744.17	41.3	0.1	45.5	0	0	0	0	0	20
12300	1.8.2016 8:30	21.17	85.63	98505	2265	41.3	0.1	44.9	0	0	0	0	0	20
12301	1.8.2016 8:35	21.48	83.35	98551	1327.92	41.2	0.1	44.9	0	0	0	0	0	20
12302	1.8.2016 8:40	21.59	83.45	98554	1312.5	41.2	0.1	45.5	0	0	0	0	0	20

Source: Own creation

Table 3: The measurement data of the day 01.8.2016.

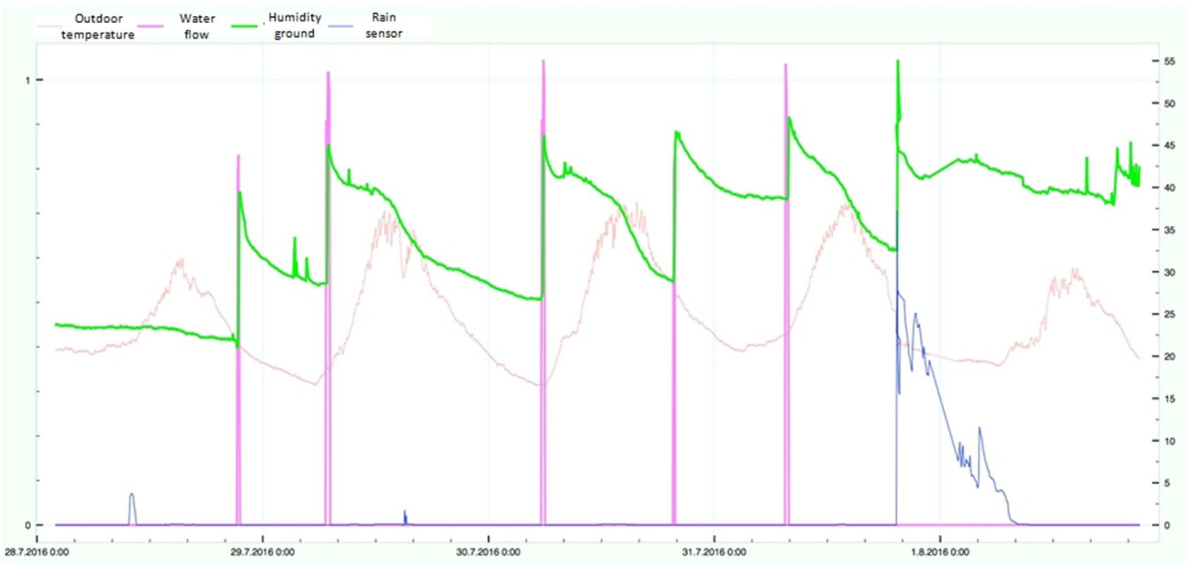

Source: Own creation

Figure 7: Activities of the smart irrigation system during whole tested period.

Conclusion

The current development of intelligent irrigation systems (as well as shown in the section Related work) is focused primarily on research in the area of drip irrigation systems. It is clear that the interest of researchers is oriented in this direction. In agriculture, is the demand

of the greatest return, but as far as possible with the least waste of water. But on the other side, we must not forget about the wasting water in parks or in ornamental gardens in the cities or wasting water when we water the lawn around the house.

In this paper, we presented a draft and creation of really smart irrigation system. This smart irrigation system is currently in active usage. The statistical results showed economic running of this smart irrigation system. The resulting errors of measurement did not significantly affect its effectiveness. Currently, we removed these inaccuracies in the measurements with more accurate sensor of humidity and sensor of rain.

Corresponding author:
doc. Ing. Štefan Koprda, PhD.
Department of Computer Science, Faculty of Natural Sciences
Constantine the Philosopher University in Nitra, Tr. A. Hlinku 1, 949 74 Nitra, Slovakia
E-mail: skoprda@ukf.sk

References

[1] Adewuyi, P. A. and Oko-Oboh, E. G. (2016) „Affordable Microcontroller-Controlled Home Irrigation System for Urban Farmers in Nigeria“, *MAYFEB Journal of Agricultural Science*, Vol. 1, pp. 27-37.

[2] Al-Ammri, A.S. and Ridah, S. (2014) „Smart Irrigation System Using Wireless Sensor Network“, *International Journal of Engineering Research & Technology (IJERT)*, Vol. 3, No. 1. ISSN 2278-0181.

[3] Angal, S. (2016) „Raspberry pi and Arduino Based Automated Irrigation System“, *International Journal of Science and Research (IJSR)*, Vol. 5, No. 7, pp. 1145-1148. ISSN 2319-7064.

[4] Eck, H. V., Mathers, A. C. and Musick, J. T. (1987) „Plant water stress at various growth stages and growth and yield of soybeans“, *Field Crops Research*, Vol. 17, No. 1, pp. 1-16. DOI 10.1016/0378-4290(87)90077-3.

[5] Galande, S. G., and Agrawal, G. H. (2013) „Embedded Controlled Drip Irrigation System“, *International Journal of Emerging Trends & Technology in Computer Science (IJETTCS)*. Vol. 2, No. 5. ISSN 2278-6856.

[6] Gao, L., Zhang, M. and Chen, G. (2013) „An intelligent irrigation system based on wireless sensor network and fuzzy control“, *Journal of Networks*, Vol. 8, No. 5, pp. 1080-1087. DOI 10.4304/jnw.8.5.1080-1087.

[7] Gheysari, M., Loescher, H. W., Sadeghi, S. H., Mirlatifi, S. M., Zareian, M. J. and Hoogenboom, G. (2015) „Water-yield relations and water use efficiency of maize under nitrogen fertigation for semiarid environments: Experiment and synthesis“, *Advances in Agronomy*, Vol. 130, pp. 175-229.

[8] Haghverdi, A., Yonts, C. D., Reichert, D. L. and Irmak, S. (2017) „Impact of irrigation, surface residue cover and plant population on sugarbeet growth and yield, irrigation water use efficiency and soil water dynamics“, *Agricultural Water Management*, Vol. 180, pp. 1-12. DOI 10.1016/j.agwat.2016.10.018.

[9] Istanbulluoglu, A. (2009) „Effects of irrigation regimes on yield and water productivity of safflower (carthamus tinctorius L.) under mediterranean climatic conditions“, *Agricultural Water Management*, Vol. 96, No. 12, pp. 1792-1798. DOI 10.1016/j.agwat.2009.07.017.

[10] Jadhav, S. and Hambarde, S. (2015) „Automated Irrigation System using Wireless Sensor Network and Raspberry Pi“, *International Journal of Science and Research (IJSR)*, Vol. 4, No. 12. ISSN 2319-7064.

[11] Kathpal, A., Chawla, N., Tyagi, N. and Yadav, R. (2017) „Low cost intelligent irrigation system“. DOI 10.1007/978-981-10-1675-2_32.

[12] Kumar, S. C. and Behera, P. (2015) „A low cost smart irrigation control system“, Paper presented at *the 2nd International Conference on Electronics and Communication Systems (ICECS 2015)*, pp. 1146-1151. DOI 10.1109/ECS.2015.7124763.

[13] Kumar, N. D., Pramod, S. and Sravani, Ch. (2013) „Intelligent Irrigation System“, *International Journal of Agricultural Science and Research (IJASR)*, Vol. 3, No. 3. ISSN 2250-0057.

[14] Madli, R., Hebbar, S., Heddoori, V. and Prasad, G. V. (2016) „Intelligent Irrigation Control System Using Wireless Sensors and Android Application“, *International Journal of Computer, Electrical, Automation, Control and Information Engineering*, Vol. 10, No. 8, pp. 1424-1430.

[15] Patanè, C., Cosentino, S. L. and Anastasi, U. (2017) „Sowing time and irrigation scheduling effects on seed yield and fatty acids profile of sunflower in semi-arid climate“, *International Journal of Plant Production*, Vol. 11, No. 1, pp. 17-32. E-ISSN 735-8043, ISSN 1735-6814.

[16] Pereira, H. and Marques, R. C. (2017) „An analytical review of irrigation efficiency measured using deterministic and stochastic models“, *Agricultural Water Management*, Vol. 184, pp. 28-35. DOI 10.1016/j.agwat.2016.12.019.

[17] Sadeghi, S., Peters, T., Shafii, B., Amini, M. Z. and Stöckle, C. (2017) „Continuous variation of wind drift and evaporation losses under a linear move irrigation system“, *Agricultural Water Management*, Vol. 182, pp. 39-54. DOI 10.1016/j.agwat.2016.12.009.

[18] Shaikh, G. Z., Khan, S. Z., Ansari, R. A. and Pingle, S. D. (2016). „Intelligent Automatic Plant Irrigation System“, International Journal of Scientific research and Education, Vol. 4, No. 11. ISSN 2321-7545.

[19] Spedding, C. R. W. (2003) „An Introduction to Agricultural Systems“, 2nd ed., Applied Science Publishers, London.