AgEcon SEARCH
RESEARCH IN AGRICULTURAL & APPLIED ECONOMICS

The World's Largest Open Access Agricultural & Applied Economics Digital Library

This document is discoverable and free to researchers across the globe due to the work of AgEcon Search.

Help ensure our sustainability.

Give to AgEcon Search

AgEcon Search
http://ageconsearch.umn.edu
aesearch@umn.edu

*Papers downloaded from **AgEcon Search** may be used for non-commercial purposes and personal study only. No other use, including posting to another Internet site, is permitted without permission from the copyright owner (not AgEcon Search), or as allowed under the provisions of Fair Use, U.S. Copyright Act, Title 17 U.S.C.*

Upper Great Plains Transportation Institute Report No. 49
Agricultural Economics Report No. 169

JULY 1983

The Evolving Country Grain Marketing System in North Dakota

by
Dennis R. Ming and William W. Wilson

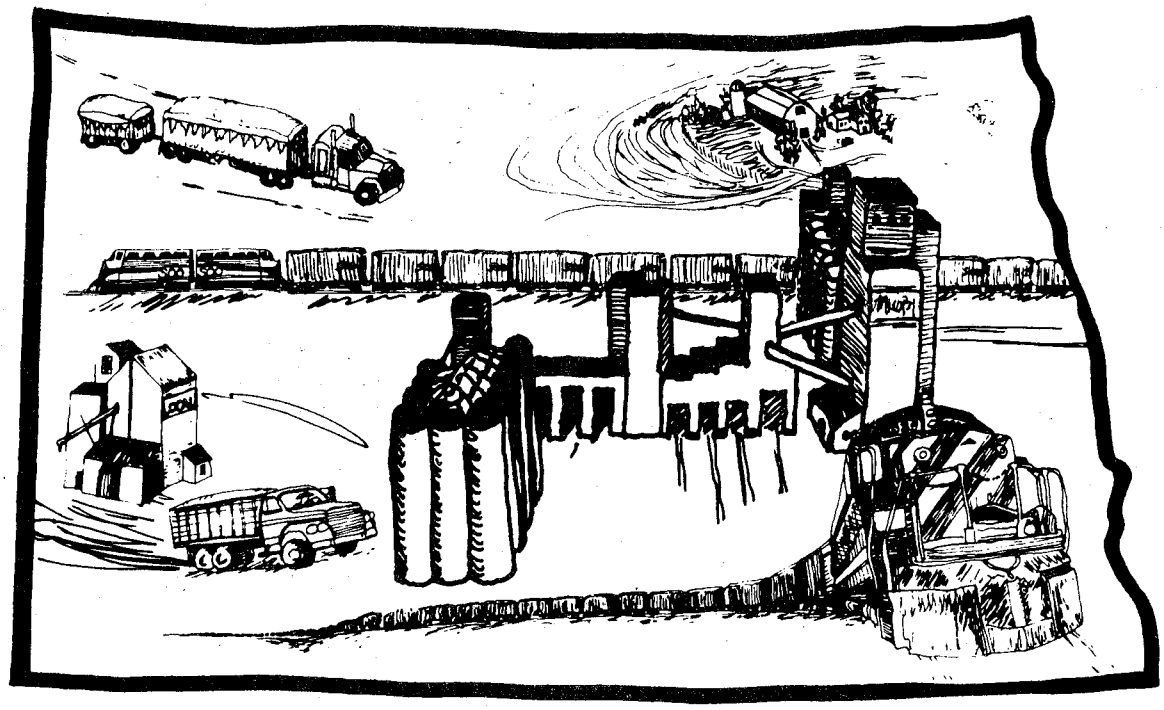

Upper Great Plains Transportation Institute
North Dakota State University

and

Department of Agricultural Economics
North Dakota Agricultural Experiment Station
Fargo, North Dakota 58105

Highlights

The country grain marketing system in North Dakota is experiencing significant change. Technological and institutional advances are transforming the country grain marketing infrastructure. Managers of grain elevator facilities must contend with rail line abandonments, equipment surpluses and shortages and frequently changing grain rates, among other things, in marketing North Dakota grain. Recently, managers have been faced with the decision to invest in facilities that are capable of multiple car grain shipment operations. The spread between the various grain rates has resulted in the single car shipper being at a competitive disadvantage to the multiple car shipper with respect to rail grain rates.

The purpose of this report is to examine the evolution of the country grain marketing system in North Dakota amidst the trend towards multiple car grain shipments. The number of country elevators operating in North Dakota has been declining since the early 1900s. Over 1,800 elevators operated in the state in 1922 compared to less than 600 in 1980. During this same time period, average storage capacities increased from about 30,000 bushels to over 260,000 bushels. The size of the average trade area has also increased; from less than 250 square miles in 1920 to almost 800 square miles today.

Managers of grain elevators are responding in different ways to the railroad's implementation of multiple car grain rates. In particular, many cooperative elevators have merged to form subterminal-satellite systems in order to consolidate sufficient grain volume for multiple car shipments. Planners of these large facilities must carefully evaluate plant location. Based on historic marketing densities, certain areas of the state will require significantly larger trade areas than other parts of the state in order to support large volume grain elevators. For a given size facility (500,000 bushel storage capacity with 10:1 turnover ratio), the trade area could be as small as 300 miles or as large as 850 square miles.

New grain marketing concepts, such as delayed pricing contracts, are being used more frequently by elevator managers in order to increase managerial control over grain inventories. Selecting hedging strategies for delayed pricing grain involves deciding whether to store or sell the grain. Factors to analyze include interest, storage charges, and anticipated basis movements.

TABLE OF CONTENTS

	Page
List of Tables	iii
List of Figures	iii
AN OVERVIEW: North Dakota Grain Handling, Transportation, and Merchandising Study	iv
Objectives	2
Methodology	2
Organization	3
Impetus for Multiple Car Shipments and Sales	4
Country Elevator Size and Location	4
Economic Pressure for Large Country Elevators	6
Economies of Density in Grain Elevation	6
Multiple Car Grain Rates	8
Effects of Large Country Elevators	10
Grain Movements	10
Elevator Location and Costs	10
Grain Storage	10
Effects on Cash Grain Merchandisers	13
Effects on Central Markets	13
Grain Marketing Trends in Other States	14
Grain Merchandising Alternatives Available to Country Elevators	16
Grain Assembly	16
Survey Results	17
Types of Grain Purchases	17
Grain Sales from Country Points	19
Types of Grain Sales	19
Country Elevator Hedging	20
Purchases	20
Sales	21
Hedging Opportunities for Country Elevator Managers	22
Transit Hedge	23
Storage Hedge	25
Delayed Pricing Hedge	28
Basis Fix NPE Contracts	28
Cash Price NPE Contracts	29
Store/Sell Decision	31
Refilling Storage Space	36
Delayed Pricing as a Management Tool	37
Commodities not Actively Traded at Futures Markets	38
Low Volume Commodities	39
Bond Protection of NPE Contracts	40

TABLE OF CONTENTS (Continued)

	Page
Factors Affecting the Development of Large Country Elevators	42
Procurement of Grain for Multiple Car Shipments	42
Alternative Grain Contracts	42
Merger	43
Hauling Against the Market	44
Double Handling	44
Underutilization	46
Origin Grades	50
Summary and Conclusions	53
Summary	53
Impetus for Multiple Car Shipments and Sales	54
Grain Merchandising Alternatives Available to Country Elevators	55
Factors Affecting the Development of Large County Elevators	56
Conclusions	56
Appendix A: Mail Survey	59
References	63

List of Tables

Table No.		Page
1	NUMBER OF LICENSED COUNTRY GRAIN ELEVATORS, AVERAGE STORAGE CAPACITY AND AVERAGE VOLUME HANDLED, NORTH DAKOTA	5
2	EXAMPLE OF WHEAT RAIL RATES, NORTH DAKOTA, 1981	8
3	COST SAVINGS BASED ON MULTIPLE CAR SHIPMENTS, BY VOLUME . . .	9
4	QUARTERLY STOCKS BY POSITION, NORTH DAKTOA, CROP YEAR 1979 . .	12
5	NUMBERS AND CAPACITIES OF GRAIN ELEVATORS IN VARIOUS STATES, JANUARY 1, 1982	15
6	TYPE OF GRAIN PURCHASES BY COUNTRY ELEVATORS, NORTH DAKOTA, 1981	18
7	TYPE OF GRAIN SALES BY COUNTRY ELEVATORS, NORTH DAKOTA, 1981	19
8	COUNTRY ELEVATOR HEDGING BY TYPE OF PURCHASE, NORTH DAKOTA, 1981	21
9	COUNTRY ELEVATOR HEDGING BY TYPE OF SALE, NORTH DAKOTA, 1981	22
10	CAPACITY AND TURNOVER RATIOS OF 68 COUNTRY ELEVATORS, NORTH DAKOTA, 1978-79	48
11	SIZE OF TRADE AREAS BASED ON ALTERNATIVE MARKETING DENSITIES AND TURNOVER RATIOS, 500,000 BUSHEL GRAIN ELEVATOR FACILITY	50
12	CARRYING COSTS TO ELEVATORS BASED ON ALTERNATIVE SHIPMENT/ SETTLEMENT TIMES AND CARLOAD VALUES, 18 PERCENT INTEREST	52

List of Figures

Figure No.		Page
1	GRAIN FLOWS BETWEEN ESTABLISHMENTS	11
2	HYPOTHETICAL EXAMPLE OF HAULING AGAINST THE MARKET	45
3	CONCENTRATION OF OFF-FARM GRAIN AND OILSEED SALES, NORTH DAKOTA 1978 CROP	49

AN OVERVIEW

North Dakota Grain Handling, Transportation, and Merchandising Study

North Dakota's branch line system was developed in the late 1800s and early 1900s primarily for the purpose of moving farm commodities to markets outside the state and to bring freight such as farm inputs and other needed goods to the state's communities. The only other form of surface transportation available for moving bulk freight when the rail network was being developed (excluding some minor river transportation) was the horse-drawn freight wagon. The limited distance that a team of horses and wagon could travel influenced the design of the early branch line railroad network. This development pattern resulted in branch lines that were no further apart than 10 to 20 miles, and even the most remote producing areas were accessible to rail transportation.

Development of the country's grain merchandising system also was influenced by the limited distance a team of horses and wagon could travel, the relative density of the branch line network, and available technology at that time. This resulted in a large number of country elevators spaced only a few miles apart on grain gathering rail lines. Although much of what existed in the past still exists today in the form of the branch line network, economic, and technological forces that influenced its development have changed since the turn of the century. Other factors are currently at work that may influence rationalization of the railroad network and the country grain merchandising system.

Factors which will influence the future grain handling transportation and merchandising system include branch line abandonment, implementation of multiple car and unit train grain rates, and capital replacement decisions. Other factors include differing rates of cost increases in the two modes, thereby shifting their competitive relationship. Competition between producing regions

also will influence the future system. Efficiencies gained as a result of changes in marketing systems by competing producing regions will possibly influence a move to obtain those same efficiencies by other producing regions. The changing technology of farm trucks and the improved quality of our highway system makes it possible for producers to move grain much further today than previously. These forces may very well influence changes in the state's traditional grain merchandising system. Government policies such as railroad deregulation also may have some impact on the system.

As a result of these impending changes that could alter a rather traditional grain handling, transportation, and merchandising system, many private and public decisions will have to be made. These include decisions regarding location, economic viability, size of plant, investment in grain facilities, investment in transportation equipment and infrastructure, efficiencies of merchandising, purchases of farm production equipment, and storage capacity. If such decisions are to be made on an informed basis, it is important that basic information about the industry be developed and published. It was for this reason that the Upper Great Plains Transportation Institute and the Department of Agricultural Economics of North Dakota State University have undertaken a study entitled "North Dakota Grain Handling, Transportation, and Merchandising Study." Cooperators in the study include Burlington Northern Railroad, Farm Bureau, Farmers Union, Grain Terminal Association, North Dakota Agricultural Experiment Station, North Dakota Department of Agriculture, North Dakota Grain Dealers Association, North Dakota Highway Department, North Dakota Public Service Commission, St. Paul Bank for Cooperatives, and the Soo Line Railroad Company. The purpose of this study is to provide relevant information to decision makers in meeting the challenge of a changing business enviroment in handling, transportation, and merchandising grain in North Dakota.

The study is composed of a number of research projects that will result in 13 separate publications of which this is one. The publications planned for release at varied time intervals are:

- Description of the Existing Country Elevator System
- Cost Analysis of Existing Country and Farm Storage System
- Cost Analysis of Subterminal Elevators
- Existing and Past Patterns of North Dakota Grain Movements
- Description of Rail Rate Structure, Multiple Car Movements, and Rates and Analysis of Shipper Owned Equipment
- Description and Analysis of Exempt Carrier Industry
- Economics of Branch Line Operation
- Farm Truck Costs
- Seasonal Behavior of Marketing Patterns for Grain from North Dakota
- Grain Merchandising
- Marketing Using Delayed Pricing Controls
- Analytical Model for Analyzing Economic Efficiencies of Subterminals
- North Dakota Grain Handling, Transportation, and Merchandising Study: Summary, Conclusions, and Policy Implications

These reports, as they are completed, will be available upon request from the Department of Agricultural Economics or the Upper Great Plains Transportation Institute, North Dakota State University.

THE EVOLVING COUNTRY GRAIN MARKETING SYSTEM IN NORTH DAKOTA

by

Dennis R. Ming and William W. Wilson*

The grain handling and transportation system in North Dakota is experiencing tremendous infrastructural change. Multiple car grain rates, rail line abandonments, energy considerations, and technological advances are corollary factors influencing this transition. Country elevators appear to be the segment of the industry that may experience the most modification. Managers of these facilities are faced with numerous decisions in determining how they will adapt to the evolving marketing system. Decisions faced by the managers include alternatives such as construction of new facilities or modification of existing facilities, merger and/or consolidation, development of innovative marketing techniques and instruments, plant location, and others. These alternatives are not mutually exclusive, and most entrepreneurs may find a need to select various combinations in dealing with the problem.

The current response to the changing grain handling and transportation environment has been to develop a marketing system that will attain efficiencies in both handling and transportation. There are economic incentives to develop a system of large country elevators (subterminals) that are capable of loading and transporting grain in multiple car shipments. Total effects of such a system are not easily discernable. However, it is certain that the transition will affect certain sectors of the physical grain distribution system differently. Naturally, some sectors will be affected more than others.

---

*Research Associate, Upper Grain Plains Transportation Institute, North Dakota State University and Assistant Professor, Department of Agricultural Economics, North Dakota State University.

An accurate definition of a "subterminal" elevator is difficult. Nelson and Horne defined a subterminal as:[1]

> ". . . those using official weights and grades, primarily engaged in merchandising raw grain, and receiving most of their grain from country elevators."

For purposes of this study, the term "subterminal" and "large country elevator" will be used interchangeably and will include elevators capable of loading and shipping grain in multiple car lots (normally 26 cars or larger).

OBJECTIVES

The main objective of this study is to present an overview of grain procuring, handling, transportation, and selling as it pertains to North Dakota. Specific objectives are to:

1. Examine the concept of shipping grain in multiple car units;
2. Describe various marketing alternatives available to country elevators;
3. Examine the concept of delayed pricing; and
4. Present possible problem areas for potential subterminal facilities.

METHODOLOGY

The majority of this report is conjectural in nature since the subject does not lend itself to rigorous quantifiable and analytical techniques. Most observations were made through visits and discussions with people involved in the grain trade. Country elevator managers, subterminal and terminal elevator superintendents, grain merchandisers, railroad officials, university personnel and others familiar with the problem were contacted to discuss certain impacts of subterminal elevators on the grain marketing system. The views of these people have been condensed and incorporated in order to present a broad overview of the grain marketing system in North Dakota. Although few analytical

---

[1]Nelson, David C. and Kent J. Horne, An Analysis of the Assembling and Merchandising of Grain to Fit the Multiple-Car Train Concept in North Dakota, UGPTI Rpt. No. 13, North Dakota St. Univ., Fargo, November 1970.

and quantitative procedures were used, results should reflect the general consensus of those familiar with grain merchandising and the problems and efficiencies that may arise as the subterminal system develops.

In addition, a questionnaire (Appendix A) was used to gather information on purchase and sales arrangements by country elevators. The questionnaire was mailed to the entire population of licensed and bonded elevators in North Dakota. The intent of the survey was to collect data on purchase and sales contracts currently being used by country elevators. The data will be particularly useful as the grain subterminal marketing concept matures. Purchase and sales arrangements and hedging strategies now being used by public warehouses may be compared with purchase and sales agreements and hedging practices in the future.

Ninety-three questionnaires were returned from the 568 elevators surveyed. Of that total, 79 were useable. There were several reasons for not using some returns. For example, some surveys were returned by specialized elevators such as pinto and navy bean facilities. Others were incomplete, contained contradictory information or were returned from facilities no longer in operation. Survey returns were as follows:

Questionnaires	Number	Percent of Total
Useable	79	14
Returned	93	16
Sent	568	100

ORGANIZATION

The remainder of this study is presented in four sections. Section two contains an analysis of the impetus for multiple car shipments and sales by North Dakota country elevators. The third section contains a description of grain merchandising alternatives available to country elevators. Section four contains a description of factors affecting the development of large country elevators in North Dakota. The summary and conclusions are presented in the last section.

IMPETUS FOR MULTIPLE CAR SHIPMENTS AND SALES

This section contains an analysis of the economic rationale for developing subterminal elevators in North Dakota. Also, possible effects of subterminal development on various sectors of the grain marketing industry are highlighted.

Country Elevator Size and Location

Country elevators have traditionally been the focal point from which grain has moved from North Dakota to areas of consumption throughout the United States and the world. When the state was first developing as a major producer of grains, country elevators began to appear along railroad tracks throughout the countryside. It was not uncommon for facilities to be located within a few miles of each other as farmers could not travel long distances in the "horse-and-wagon" era. As motor transportation developed, producers were able to transport grain longer distances and no longer required such close proximity to country markets. Many country elevators were forced to leave the industry as they could not meet competition. As a result, the number of elevators in North Dakota decreased from 1,832 in 1923 to 789 in 1965 and 592 in 1981 (Table 1). Average storage capacity, on the other hand, increased from 30,000 bushels in 1923 to 159,000 bushels in 1965 and 263,000 bushels in 1981. Consequently, the long-term trend has been towards fewer and larger country elevators.

While the number of country elevators decreased throughout much of the 1900s, the average size of trade areas served by the elevators first increased significantly and then stabilized. The size of the average trade area[2] was 226 square miles in 1920[3] and 785 square miles in 1962;[4] it has not changed

---

[2]Trade area refers to the area (in square miles) served by country elevators. For example, an elevator serving a circular trade area of 500 square miles would draw grain from a radius of 12.6 miles (12.6 = 500/).

[3]Benton, Alva H. and M. F. Peightal, Farmers Elevators in North Dakota, Bul. 206, North Dakota Agr. Exp. Sta., North Dakota Agr. College, Fargo, Feb. 1927.

[4]Velde, Paul D., Fred R. Taylor, and Jerome W. Hammond, The Organization of Country Markets for Grain in North Dakota, Ag. Econ. Rpt. No. 49, Dept. of Agr. Econ., Agr. Exp. Sta., North Dakota St. Univ., Fargo, July 1966.

TABLE 1. NUMBER OF LICENSED COUNTRY GRAIN ELEVATORS, AVERAGE STORAGE CAPACITY AND AVERAGE VOLUME HANDLED, NORTH DAKOTA

Crop Year	Licensed Elevators	Average Storage Capacity	Average Volume Handled
	- - - - # - - -	- - - - - - - - bushels	- - - - - -
1922-23	1,832	30,000	---
1952-53	936	68,000	---
1964-65	789	159,000	---
1969-70	663	188,000	460,000
1971-72	650	197,000	460,000
1973-74	636	207,000	647,000
1975-76	617	204,000	519,000
1977-78	600	229,000	598,000
1979-80	589	248,000	808,000
1980-81	592	263,000	678,000

SOURCE: North Dakota Grain Dealers Association, Directory of Licensed and Bonded Country Elevators in North Dakota, Fargo, 1981 and Griffin, Gene C., North Dakota Grain and Oilseed Transportation Statistics 1980-81, UPPTI Report No. 42, Upper Great Plains Transportation Institute, North Dakota State University, Fargo, March 1982.

significantly since then.[5] This increase in trade area size at least partially reflects the producer's ability to transport grain greater distances to first market destinations. As the country elevator system in North Dakota continues to change, producers may be required to transport grain even greater distances as elevators decrease in number and increase in size. This may be particularly true if the development of large country elevators results in a further reduction in the number of country elevators.

Economic Pressure for Large Country Elevators

Whether large country elevators become an economical part of the country grain marketing system in North Dakota ultimately depends on associated cost savings. Generally, large country elevators are expected to gain efficiencies, relative to traditional country markets, in two areas: (1) inhouse handling of grain and (2) transportation.

[5]Casavant, Ken C., 1980 Country Elevator Survey, unpublished data.

Economies of Density in Grain Elevation

An important factor contributing to the economic pressure for developing larger country elevators in North Dakota is the relationship between average costs per unit of output and total output (i.e., economies of density). Economies of density are said to exist if average costs decrease as output increases. Diseconomies of density exist if the opposite is true. It is important for planners of large country elevators to be aware of this cost relationship in analyzing alternative sizes of plant.[6] High costs imply inefficient utilization of plant while lower costs suggest a somewhat more efficient merchandising firm.

Several studies have indicated that the country elevator system in North Dakota has operated inefficiently in the past. Velde found that country elevators had excess grain handling capacity of 36 percent in 1962.[7] Similarly, over 50 percent of the elevators were operating either moderately or substantially above "lowest attainable" costs.

Waltz indicated that, in order to approach optimality with respect to handling North Dakota's grain production, country elevators in North Dakota would need to:[8]

1) Operate at 80 percent of capacity compared to 56 percent in 1969;
2) Decrease numbers from 696 firms to 109 firms; and
3) More than quadruple average storage capacity.

Waltz based his findings on a model which summed merchandising and assembly cost curves and identified an optimum size plant.

---

[6]For a discussion on costs of potential subterminal elevators in North Dakota see, Chase, Craig A. and Delmer L. Helgeson, Cost Analysis of Potential North Dakota Subterminal Systems, Ag. Econ. Rpt. No. 156 and UGPTI Rpt. No. 44, Dept. of Agr. Econ. and UGPTI, North Dakota St. Univ., Fargo, 1983.

[7]Velde, op. cit., p. 48.

[8]Waltz, Duane J., Optimum Size and Location of Elevators, unpublished M.S. Thesis, Dept. of Agr. Econ., North Dakota St. Univ., Fargo, 1971.

In addition, studies have shown that high throughput elevator facilities attain economies relative to traditional country elevators. Koo and Cox indicated that subterminals enjoyed a one-half cent per bushel cost advantage in receiving grain and a 0.6 to 1.2 cent per bushel cost advantage in loading out grain over country elevators operating in Montana in 1976.[9] A study of subterminal elevators operating in Iowa by Hilger et al. indicated that annual cost savings accruing to subterminals could be as high as $4 million or two cents per bushel.[10] A similar study by Fedeler et al. disclosed that a rail system based on 50-car shipments could save shippers $68 million annually relative to single-car shipments.[11] The results were based on an interregional mathematical programming model that analyzed 152 producing regions and 78 market destinations in the United States.

Cost savings may also accrue in North Dakota as larger facilities begin to operate in the state and become more prominent in the grain merchandising system. Whether or not these firms develop and survive depends on how efficient they are with respect to the inhouse handling, transportation, and marketing of grain. Ultimate effects of large country elevators operating in North Dakota are uncertain, but probable effects may include changes in grain movements, facility location, and elevation costs.[12]

---

[9] Koo, Won W. and Linda Cox, Grain Distribution by Rail, Bul. 707, Dept. of Agr. Econ. and Economics, Montana St. Univ., Bozeman, February 1979.

[10] Hilger, Donald A., Bruce A. McCarl, and J. William Uhrig, "Facilities Location: The Case of Grain Subterminals," Am. J. of Agr. Econ., Vol. 59, No. 4, November 1977, pp. 679-681.

[11] Fedeler, Jerry A., Earl O. Heady, and Won W. Koo, An Interregional Analysis of U.S. Domestic Grain Transportation, CARD Rpt. 54T, Center for Agr. and Rural Dev., Iowa St. Univ., Ames, February 1975.

[12] Hertsgaard, Thor, Optimum Organization of North Dakota Grain Handling and Transportation Facilities, Dept. of Agr. Econ., North Dakota St. Univ., Fargo, forthcoming.

Multiple Car Grain Rates

Larger country elevators are being developed not only to take advantage of economies in inhouse handling of grain, but also to realize economies in transportation. Multiple car grain rates, first implemented in North Dakota in December 1980, provide an economic incentive to elevator managers to ship their grain in multiple car lots. Published multiple car rates in effect in 1981 ranged from three-car rates to 54-car rates. Among the more common were: 1) 26-car multiple origin; 2) 26-car single origin; and 3) 52-car single origin. These rates represented significant savings relative to single car rates (Table 2).

TABLE 2. EXAMPLE OF WHEAT RAIL RATES, NORTH DAKOTA, 1981[a]

	Rate[b]			
Origin	Single Car	26-Car Multiple Origin	26-Car Single Origin	52-Car Single Origin
	- - - - - - - - - - - - cents per cwt. - - - - - - - - - - - -			
New Salem	123	106	101	95
Glen Ullin	129	113	107	102
Sharon	93	75	69	64
Luverne	89	72	66	61

[a]Rates are X-386 level X 001 basis.
[b]Rates are applicable to Duluth, Minneapolis, Minnesota Transfer, St. Paul and Superior destinations.

SOURCE: Burlington Northern Railroad Company, Freight Tariff BN 4016, Supplement 1974, October 1981.

For example, the single-car rate for shipping wheat to Minneapolis/St. Paul from New Salem was $1.23 per cwt. The rate for the 26-car multiple origin shipment was $1.06 per cwt. while the 26-car and 52-car single origin shipments were $1.01 and $0.95 per cwt., respectively.[13]

[13]Rate savings were more pronounced during part of 1982. Certain shippers could save as much as 29 cents per bushel of grain on 52-car shipments to Pacific Northwest destinations relative to single car shipments.

Total savings based on these multiple car rates could have been substantial (Table 3). For example, shipping 175,000 bushels of wheat at the 52-car rate would have saved roughly $26,000 relative to shipping in single car lots.

TABLE 3. COST SAVINGS BASED ON MULTIPLE CAR SHIPMENTS, BY VOLUME

	Savings Over Single Car Shipment		
Volume of Shipment	26-Car Multiple Origin[a] (15¢/Cwt.) 9¢/bu.	26-Car Multiple Origin[a] (20¢/Cwt.) 12¢/bu.	52-Car Multiple Origin[a] (25¢/Cwt.) 15¢/bu.
- - bushels - -	- - - - - - - - - - - - - - - dollars - - - - - - - - - - - - - -		
87,500	7,875	10,500	---
175,000	15,750	21,000	26,250
350,000	31,500	42,000	52,500
525,000	47,250	63,000	78,750
700,000	63,000	84,000	105,000

[a]26-car shipments are 87,500 bushels while 52-car shipments are 175,000 bushels. These volumes are based on hopper car capacities of 200,000 lbs. and 60 lbs. per bushel wheat.

An elevator facility shipping 700,000 bushels in 52-car lots could have saved over $100,000 compared to single car shipments. Future reductions in the multiple car rate structure could result in substantially higher rate savings and further incentives for shipping in multiple car lots. However, there is much uncertainty as to future rate levels and the spread between the various rates.

Effects of Large Country Elevators

A change will occur in North Dakota's traditional grain marketing system if large country elevators become more prominent in merchandising grain. The magnitude and succession of these changes, however, depend largely upon the direct and indirect efficiency gains (if any) realized by these facilities.

Grain Movements

Country elevators in North Dakota have traditionally shipped grain to various port and terminal elevator facilities. The expansion of subterminals in the state may alter this direct interstate movement of grain. Some country elevators may find it preferable to market grain through subterminals, as opposed to terminals, as ancillary or independent operations in the future. This alternative flow of grain is depicted in Figure 1.

Elevator Location and Costs

Facility location and elevation costs are expected to change if the subterminal marketing concept develops in North Dakota.[14] Again, if these facilities are significantly more cost efficient than present facilities, the distribution of country elevators may be altered. It may be difficult for traditional facilities to compete in close proximity with the larger facilities. Consequently, many country elevators may be forced to relocate or discontinue service. Another possible option may be to merge or consolidate with a willing subterminal facility and operate under a subterminal-satellite elevator system. In either case, the function of the country elevator will have changed.

Grain Storage

The economic importance of grain storage is apparent for at least three reasons: 1) market channels cannot absorb the glut at harvest time; 2) grain is consumed in fairly constant quantities throughout the marketing year; and 3) prices tend to be lower at harvest compared to other times during the

---

[14] Hertsgaard, op cit.

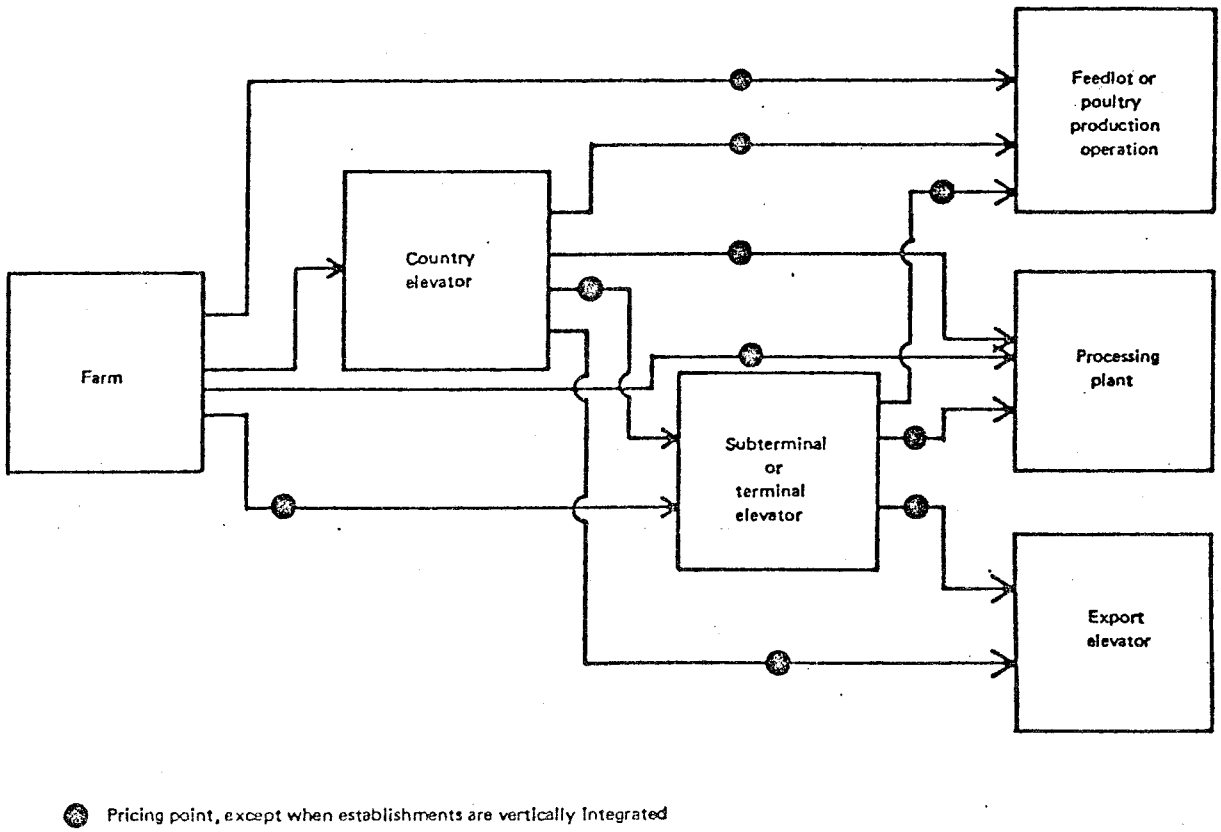

Figure 1. Grain Flows Among Establishments

SOURCE: Turner, Mike, Richard Heifner, Everett Nichols, and Robert Wisner. Who Will Market Your Grain? D-1057, Texas Agricultural Extension Service, Texas A&M University, College Station, March 1978.

year.[15] All three reasons provide incentives to producers, grain merchandisers, and processors to possess grain storage facilities.

Grain storage is an extremely important function to North Dakota farmers. Wheat producers had an average of 28,500 bushels of on-farm storage capacity in 1978.[16] Average off-farm storage capacity was roughly 3,600 bushels per farm.[17] Stocks of grain for 1979 are listed in Table 4. Stocks are typically highest following hargest (October) and lowest just prior to harvest (June). On-farm stocks of grain are generally four to six times as large as off-farm stocks of grain throughout the marketing year. On-farm storage may become an even more important function to producers as the grain handling and transportation system evolves. New facilities currently being constructed in the state are being designed as high throughput elevators--not storage facilities. Producers may need to expand storage capacity as these large elevators de-emphasize commercial storage practices and concentrate on merchandising activities.

TABLE 4. QUARTERLY STOCKS BY POSITION, NORTH DAKOTA, CROP YEAR 1979

Grain	Oct. 1		Jan. 1		Apr. 1		June 1	
	On-Farm	Off-Farm	On-Farm	Off-Farm	On-Farm	Off-Farm	On-Farm	Off-Farm
	thousand bushels							
Wheat	317,816	62,839	242,146	43,409	149,221	41,600	138,729	35,500
Durum	103,090	16,725	74,360	10,428	54,925	11,240	42,250	6,101
Barley	106,260	16,539	88,803	11,569	68,310	12,400	52,371	9,167
Oats	59,136	3,965	49,896	3,081	37,330	2,010	26,611	1,551

SOURCE: North Dakota Crop and Livestock Reporting Service, North Dakota Agricultural Statistics, Ag Statistics No. 48, North Dakota State University, Agricultural Experiment Station and United States Department of Agriculture, Economics and Statistics Service, cooperating, Fargo, May 1981.

---

[15] Wilson, William W., Factors Affecting Post Harvest Changes in Grain Prices Received by North Dakota Producers, Ag. Econ. Rpt. No. 146, Dept. of Agr. Econ., North Dakota St. Univ., Fargo, May 1981.

[16] Ming, Dennis R., 1979 Grain Reserve Survey, unpublished data.

[17] Based on 143,153,833 bushels of total commercial storage capacity divided by 40,000 farms.

Effects on Cash Grain Merchandisers[18]

Grain merchandisers operate in the market as both buyers and sellers of grain. Merchandisers generally purchase grain from country elevators and sell it to terminal markets, processing plants, and exporters. The most important function performed by merchandisers is to provide a link between country elevators and buyers of grain (terminal markets, etc.).

Grain industry officials indicated that the merchandiser's role in grain marketing may change as larger country elevators develop in North Dakota. The general feeling among those interviewed was that grain merchandisers would not be as prominent in marketing grain as elevator facilities increase in size. Most felt that many elevator managers would increase their use of direct sales to terminal elevators and processing plants and would bypass cash grain merchants to some degree. Total effects were not expected to be significant; however, independent merchandisers and small grain firms were expected to be affected the most.

Effects on Central Markets

Central markets, such as the Minneapolis Grain Exchange, developed in the late 1800s out of a need for a centralized marketplace for grain. These markets concentrated small quantities of farm products into large lots for further merchandising. Larger country elevators are apt to combine functions previously performed at both country elevators and terminals. For example, most traditional country elevators receive grain from farmers and ship it to terminal markets; subterminals, on the other hand, may receive considerable amounts of grain from other elevators before it is shipped to terminal elevators and other destinations. Consequently, the role of the central market (Grain Exchange) may be affected somewhat by a redirected flow of grain.

---

[18]The discussion that follows is based largely on personal communication with several grain merchandisers.

The amount of hedging and speculating that is performed at the Minneapolis Grain Exchange (MGE) has been increasing in recent years. Subterminals or large country elevators should not detract from the volume of futures trading (in fact, as merchandising practices improve, the use of futures markets may increase), but they may affect the relative volumes of commodities sold directly on the cash floor. For instance, many grain officials feel that the advent of multiple car shipments will result in certain grains bypassing the Minneapolis market. One reason is that grain sold directly on the MGE floor is generally shipped in single car lots. Multiple car lots, on the other hand, are normally sold to-arrive or by other contractual agreements--agreements that normally are settled outside of the Minneapolis market. Consequently, the amount and types of grains moving directly through the Exchange may decrease as elevator facilities in North Dakota increase in size.

Grain Marketing Trends in Other States

North Dakota is not unique in experiencing change in the grain handling and transportation environment. Other states are changing or have already changed from traditional grain marketing practices. States such as Iowa, Kansas, and Nebraska have made the transition from small country elevators to a grain handling system characterized by "large" facilities. While small facilities exist in these states, large subterminal and terminal facilities are focal points around which the state grain marketing industry revolves. Iowa and Nebraska have large numbers of subterminal facilities, while Kansas has significant numbers of inland terminals, the general difference being that Kansas has many extremely large capacity facilities (several with more than 10,000,000 bushels of storage capacity).

Off-farm storage capacity in 1982 was larger for these states compared to North Dakota (Table 5). Average storage capacity per elevator in Iowa,

Kansas, and Nebraska was over two times the average capacity in North Dakota. South Dakota and Montana, on the other hand, had average capacities comparable with North Dakota. Some of these differences may be attributed to crop yields and to the various types of crops grown in some areas.

TABLE 5. NUMBERS AND CAPACITIES OF GRAIN ELEVATORS IN VARIOUS STATES, JANUARY 1, 1982

State	Number of Facilities	Rated Off-Farm Storage Capacity	Average Storage Capacity
		- - - - - thousand bushels - - - -	
Illinois	1,129	840,860	745
Iowa	1,037	738,710	712
Kansas	994	842,000	847
Montana	259	54,260	210
Nebraska	720	547,790	761
North Dakota	556	155,110	279
South Dakota	386	91,980	239
Washington	324	193,310	597

SOURCE: United States Department of Agriculture, Statistical Reporting Service, Grain Stocks, January 1982.

According to several elevator operators and grain industry officials from Kansas and Nebraska, considerable change has taken place with respect to grain marketings in the last decade. First, unit train rates and larger facilities have evolved. Second, origin grading has emerged. Third, transportation problems, in general, have increased. And fourth, hedging and basis contracts have gained in importance.

While changes in the Kansas and Nebraska grain handling and transportation systems may not necessarily be the same as apparent forthcoming changes in North Dakota's grain marketing system, some degree of parallelism is evident. Similarities include:

1) Multiple car rates were introduced in North Dakota following implementation in other states;
2) Price competition between railroads in the two regions has evolved; and

3) Larger elevator facilities are being constructed in North Dakota approximating previous expansion in both Kansas and Nebraska.

Regardless of the degree of similarity or disparity between North Dakota and other states, as the grain handling and transportation system evolves the major objective is to achieve a more efficient industry. How each area achieves that objective will vary, but each may learn from mistakes and/or correct decisions made by predecessors. For example, elevator operators in North Dakota may want to explore the use of basis contracts in order to protect margins. Also, implementation of official grades at certain origins may enhance efficiency. Other changes may also be beneficial for the North Dakota grain marketing system, and it is important that entrepreneurs carefully evaluate each possible alternative.

GRAIN MERCHANDISING ALTERNATIVES AVAILABLE TO COUNTRY ELEVATORS

This section contains a description of grain procurement and sales contracts and hedging strategies used by country elevator managers in North Dakota. In addition, the concept of delayed pricing is examined.

Grain Assembly

Most country elevators in North Dakota assemble grain exclusively from local producers. The method of purchase varies somewhat with different types of grain but is fairly uniform among elevators. For the most part, three basic contracts have been used by country elevator managers in North Dakota: 1) cash contract, 2) forward contract, and 3) deferred pricing contracts. Various derivatives of each type exist but most may be categorized under these three basic class.

A study of grain title transfer arrangements by Fisher indicated that cash purchases by country elevator managers was the most prevalent method

used in procuring grain during crop years 1972-73 and 1974-75.[19] Fisher found that 77 and 88 percent of wheat purchases during crop years 1972-73 and 1974-75, respectively, were cash procurements. Fisher did not differentiate between hard red spring wheat and durum. Cash purchases of barley totalled 81 percent for both crop years. Delayed pricing contracts were not used by any country elevator managers interviewed by Fisher. Other than cash contracts, only advance or forward contracts were used for grain procurement.

Survey Results

The main purpose of the mail questionnaire was to gather data on purchase, sales, and hedge arrangements used by country elevator managers in North Dakota. Data gathered were for crop year 1980-81. Elevators responding to the survey handled about 25 percent more grain than the state average for all elevators. The survey results may reflect this bias.

Types of Grain Purchases

Results of the questionnaire indicated that the basic cash, forward and no price established (NPE) contracts were most commonly used by country elevators in procuring grain during the 1980-81 crop year (Table 6). Cash purchases were used most extensively with 74, 69, 55, and 47 percent of the durum, barley, hard red spring wheat, and sunflower being purchased with cash contracts, respectively. Cash contracts typically include cash purchases: 1) at harvest; 2) from elevator storage; and 3) from farm storage.

Forward contracts were used most extensively by elevators in purchasing sunflower. A total of 39 firms purchased 29 percent of their sunflower with forward contracts. This compared to 46 firms and 20 percent for hard red spring wheat, 26 firms and 24 percent for barley, and 33 firms and 14 percent for durum.

---

[19] Fisher, Neal H., Analysis of Grain Title Transfer Arrangements, unpublished M.S. Thesis, Dept. of Agr. Econ., North Dakota St. Univ., Fargo, 1976.

TABLE 6. TYPE OF GRAIN PURCHASES BY COUNTRY ELEVATORS, NORTH DAKOTA, 1981

Type of Contract	Average Bushels							
	HRS	n	Durum	n	Barley	n	Sunflower	n
Cash	226,985 (55%)	66	141,291 (74%)	60	138,311 (69%)	57	166,164 (47%)	52
Forward	81,935 (20%)	46	26,699 (14%)	33	48,714 (24%)	26	104,154 (29%)	39
NPE (cash price)	57,224 (14%)	20	21,885 (12%)	11	12,414 (6%)	6	56,232 (16%)	4
NPE (basis fix)	49,320 (12%)	12	---	--	---	--	30,462 (9%)	3

While no elevator managers interviewed by Fisher used price later contracts during crop years 1972-73 and 1974-75, some NPE activity took place during 1980-81. Of the 79 country elevators responding to the survey, 20 indicated that they used cash price NPE contracts for 14 percent of their hard red spring wheat purchases. Another 12 firms indicated they used basis fix NPE contracts for 12 percent of their hard red spring wheat purchases.[20] Country elevator managers indicated using cash price NPE contracts for 16, 12, and 6 percent of their sunflower, durum, and barley purchases, respectively. Basis fix NPE contracts were used for 9 percent of total sunflower purchases, but were not used for durum and barley purchases by managers in the sample.

Grain Sales from Country Points

The grain marketing system begins ultimately with the producer. While farmers may sell a portion of their crop directly to millers, processors, feedlots, and export elevators, most sell directly to country elevators. These country elevators in turn market the grain through various market

[20] Flat or cash price NPE contracts refer to contracts whereby the seller receives the elevator board price on the day the grain is priced. Basis fix NPE contracts refer to establishing a price a given number of cents under or over a predetermined contract month.

channels such as terminal and port elevator facilities. The type of sale generally varies depending on market conditions and other market related factors.

Types of Grain Sales

Results of the mail questionnaire indicated that country elevator managers use two primary methods in selling grain: 1) spot market, and 2) to-arrive bid (Table 7). Grain that is sold in the spot (cash) market is generally sold in single car lots on the Minneapolis Grain Exchange floor.

TABLE 7. TYPE OF GRAIN SALES BY COUNTRY ELEVATORS, NORTH DAKOTA, 1981

Type of Sale[a]	HRS	n	Durum	n	Barley	n	Sunflower	n
Spot Market	158,987 (39%)	58	90,139 (49%)	60	123,918 (48%)	50	151,689 (32%)	18
To-Arrive	192,910 (48%)	63	84,054 (46%)	55	106,078 (41%)	38	236,737 (50%)	51
T.C.S.[b]	50,700 (13%)	19	9,454 (5%)	3	27,091 (11%)	13	82,195 (17%)	6

[a]Local sales are not included due to insignificant levels.
[b]Track Country Station.

Buyers are able to inspect the grain since samples from the cars are available at the Exchange. Grain sold to-arrive is priced but delivered at the destination point at a later date. The country elevator is responsible for transportation charges when selling to-arrive or in the spot market. An alternative for the elevator is to sell "track country station" (T.C.S.) which transfers transportation costs to the purchaser. Grain sold T.C.S. is also priced prior to delivery.

Survey respondents indicated that most of their durum and barley were sold in the spot market while most of their hard red spring wheat and sunflower were sold in the to-arrive market. Managers reported selling 49 percent of their durum, 48 percent of their barley, 39 percent of their

hard red spring wheat, and 32 percent of their sunflower in the spot market. Managers reported selling 50 percent of their sunflower, 48 percent of their hard red spring wheat, 46 percent of their durum, and 41 percent of their barley in the to-arrive market. Residual grain sales were track country station sales.

Country Elevator Hedging[21]

Country elevator operators were asked to estimate the percentages of hard red spring wheat and sunflower hedged by type of purchase and type of sale. These percentages were then multiplied times the volume of grain purchased or sold by the various types of contracts to obtain relative volumes hedged by commodity.

Purchases

Survey results indicated that country elevator managers used hedging strategies quite extensively during crop year 1980-81 (Table 8). The hedging may have been performed with or without the use of futures contracts. For example, a cash or other purchase by the elevator may have been covered with a to-arrive contract as opposed to a futures contract. Elevator managers did not differentiate between cash market hedges and futures market hedges.

Elevator managers indicated that 87, 86, and 69 percent of their hard red spring wheat NPE, forward contract, and cash purchases, respectively, were hedged.[22] Similarly, 65 percent of sunflower cash and forward contract purchases were hedged. Not all elevator managers hedged their NPE positions on hard red spring wheat. Since only 14 out of 20 managers using NPE contracts for hard red spring wheat purchases indicated replacing the NPE grain with futures, some may have been storing grain or remaining in an unhedged position.

---

[21]The timing of the survey was such that sunflower was actively traded at the Minneapolis Grain Exchange. However, since the survey was conducted, sunflower futures trading has been almost nonexistent.

[22]Cash price NPE contract only.

TABLE 8. COUNTRY ELEVATOR HEDGING BY TYPE OF PURCHASE, NORTH DAKOTA, 1981

	Grain Hedged					
	HRS			Sunflower		
Type of Purchase	Bushels	Percent of Total[a]	n	Bushels	Percent of Total[a]	n
Cash	157,619	69	52	108,007	65	15
Forward Contract	70,698	86	25	68,158	65	16
NPE[c]	49,640	87	14	---	--	--

[a]Percent of respective totals from HRS column in Table 6.
[b]Percent of respective totals from Sunflower column in Table 6.
[c]Cash price NPE contracts only.

Sales

Country elevator operators responding to the survey indicated fairly heavy hedging strategies with respect to various types of sales agreements (Table 9). Operators indicated that hard red spring wheat sold to-arrive, spot and track country station was 96, 70, and 12 percent hedged, respectively. Hedged positions on sunflower represented 71 percent of to-arrive sales, 65 percent of spot sales and 12 percent of track country station sales. The 63 managers selling hard red spring wheat to-arrive indicated that 96 percent of their grain was hedged. The 4 percent that was not hedged may have been grain that was sold to-arrive but not yet purchased. This may have also been the case for sunflower since 29 percent of to-arrive sales were reported by elevator managers to be "unhedged."

Five elevator operators indicated that 12 percent of their hard red spring wheat sold track country station (T.C.S.) was hedged. This indicates that most elevator managers were selling hard red spring wheat T.C.S. prior to assembling or prior to pricing the grain. This was also the case with sunflower sold T.C.S., since two managers indicated hedged positions on 12 percent of the T.C.S. sales.

TABLE 9. COUNTRY ELEVATOR HEDGING BY TYPE OF SALE, NORTH DAKOTA, 1981

	Grain Hedged					
	Hard Red Spring			Sunflower		
Type of Sale	Bushels	Percent of Total[a]	n	Bushels	Percent of Total[b]	n
Spot Market	111,628	70	37	98,852	65	5
To-Arrive	184,875	96	63	167,208	71	20
T.C.S. (f.o.b.)[c]	5,943	12	5	9,690	12	2

[a]Percent of respective totals from HRS column of Table 7.
[b]Percent of respective totals from Sunflower column of Table 7.
[c]Tack Country Station.

Elevator managers reported that 70 percent of their hard red spring wheat and 67 percent of their sunflower sold in the spot market was hedged. These figures indicate that substantial amounts of grain sold in the spot market were not hedged with futures or cash contracts.

Hedging Opportunities for Country Elevator Managers

Country elevator managers have a responsibility to their firms to maintain adequate grain trading margins and profits. Maintaining these margins includes managing risks associated with volatile grain prices and precludes simply buying and selling cash grain. Most managers should use marketing strategies that allow them to reduce price risks in order to insure profits. One strategy available to country elevator operators is the use of futures markets (hedging). Three basic types of hedges exist: 1) transit hedge; 2) storage hedge; and 3) delayed pricing hedge.

Transit Hedge

Elevator managers essentially have two options in selling most grains. First, they can sell the grain in the spot or cash market; second, they can sell the grain in the to-arrive market. The first alternative refers to selling the grain in the cash market at a given location, and risk management

requires hedging in the futures market while it is in transit. The second alternative refers to selling grain for future delivery. Managers selling grain in the spot market assume price risks while the grain is in transit. Managers who sell grain to-arrive are not exposed to price risk, so the to-arrive sale is an alternative to a hedged sale in the cash market.

Elevator managers must consider several factors in determining whether to sell grain in the spot market or the to-arrive market. The difference between the prices is one of the most important factors in the decision. Two factors to consider include: 1) to-arrive/futures price relationship; and 2) spot/futures price relationship. Being aware of these price relationships enables elevator managers to increase profits by selling their grain in one market as opposed to selling in other market.[23]

To-arrive sales normally involve time periods of 5, 10, 20, or 30 days, but may vary. An elevator manager selling grain on a 20-day to-arrive contract on March 1 would be required to make delivery by March 21.[24] The decision to be made by the elevator manager involves whether the grain should be priced on March 1 for delivery on March 21 (to-arrive sale) or delivered and priced sometime between March 1 and March 21 (spot sale). The elevator manager should compare the to-arrive/futures basis on March 1 with the expected spot/futures basis on March 21. If the elevator manager feels the spot/futures basis will be larger on March 21 than the to-arrive/futures basis on March 1, the spot sale would be the preferred alternative. For

---

[23]The authors recognize that considerations other than price may affect elevator managers' decisions to sell their grain in either the spot or to-arrive markets. For example, an elevator manager may choose not to sell to-arrive because adequate transportation cannot be secured or because he prefers to consign his grain with a certain commission company. The discussion that follows, however, indicates how various price (basis) relationships may affect the profitability of selling grain in one market versus selling in the other market, exclusive of other marketing considerations.

[24]The discussion that follows assumes to-arrive contracts are delivered on calendar days rather than working days.

example, assume that on March 1 an elevator manager was contemplating selling wheat on a 20-day to-arrive contract (Example 1). Further assume that the to-arrive bid and futures price on March 1 were $4.20 and $4.05 per bushel,

EXAMPLE #1

Date	Cash Market		Futures Market[a]		Basis
March 1	Sell To-Arrive	$4.20	Sell Futures	$4.05[b]	+15¢
March 21	Sell Spot	$4.18	Buy Futures	$3.99	+19¢

Net Results:
To-Arrive Sale = $4.20 per bushel
Spot Sale = $4.24 per bushel ($4.18 spot price plus 6¢ per bushel trading profit from futures market)

[a]Futures market transactions refer to spot market sales only.
[b]Futures were sold to cover cash grain purchases.

respectively (to-arrive/futures basis of +15 cents). The elevator manager could have contracted a price of $4.20 per bushel on March 1 by initiating a to-arrive sale for delivery on March 21. Alternatively, the elevator manager could sell futures at $4.05 per bushel on March 1 and speculate that the basis will strengthen enough by March 21 to make the spot sale more profitable than the to-arrive sale. The net result would be a loss of 2 cents per bushel in the cash market (to-arrive price on March 1 of $4.20 per bushel minus spot price on March 21 of $4.18 per bushel) and a gain of 6 cents per bushel in the futures market (sale of futures at $4.05 per bushel on March 1 minus purchase of futures of $3.99 per bushel on March 21). The overall gain of a spot sale versus a to-arrive sale would have been 4 cents per bushel. Example #2 depicts the results of the two cash market sales when the spot/futures basis is smaller on March 21 than the to-arrive/futures basis on March 1. In this instance, the to-arrive sale would have been the preferred alternative since a 4 cents per bushel loss would have been incurred by the elevator manager through the transit hedge transaction.

In summary, a short hedge and subsequent spot sale is preferable to a to-arrive sale if the spot/futures basis is expected to be larger than the to-arrive/futures basis. The to-arrive sale is the preferred alternative if this basis relationship is expected to be smaller.

EXAMPLE #2

Date	Cash Market		Futures Market[a]		Basis
March 1	Sell To-Arrive	$4.20	Sell Futures	$4.05[b]	+15¢
	or				
March 21	Sell Spot	$4.10	Buy Futures	$3.99	+11¢

Net Results:
To-Arrive Sale = $4.20 per bushel
Spot Sale = $4.16 per bushel ($4.10 spot price plus 6¢ per bushel trading profit from futures market)

[a]Futures market transactions refer to spot market sales only.
[b]Futures were sold to cover cash grain purchases.

Storage Hedge

Country elevators are typically geared for high throughput during peak demand periods but experience little merchandising activity during off-peak periods. It is possible for managers to increase utilization of elevator storage and realize returns by implementing a storage hedge during off-peak periods. The basics behind earning returns to storage are described generally in order to identify how and when storage hedges may be used effectively.

Elevator operators must be aware of which basis opportunities to accept and which to reject in order to profit from a storage hedging strategy. The grain stored is owned by the elevator and profits accrue through favorable gains in basis. It is imperative that elevator managers be aware of how much storage capacity to allocate to storage hedges before the hedge is initiated. Managers must also consider how long to hedge and the proper delivery month in which to place the hedge.[25] Managers must have reliable

[25]The duration of the hedge is not definite. That is, the elevator manager should decide the maximum length of time he can stoere the grain. However, the grain can be sold and the hedge lifted at any time should market conditions warrant doing so.

estimates of the expected volume of grain to be handled and of both committed and uncommitted storage space. Analyzing these factors will give elevator operators an idea of how much storage space to allocate to a storage hedging strategy. For example, an elevator that has 250,000 bushels of storage capacity, fall volume of 1,000,000 bushels and previously committed storage capacity of 50,000 bushels can purchase and store one out of every five [1,000,000 ÷ (250,000 - 50,000)] bushels handled or 200,000 bushels (1,000,000 ÷ 5). The remainder (800,000 bushels) must be sold in the to-arrive or spot market. The elevator manager then owns (or will own) 200,000 bushels of grain and can hedge it with the objective of earning returns to storage.

The mechanics of the storage hedge involves selling futures at the time of purchasing cash grain and lifting it at the time of sale. The hedge should be initiated when the basis is weak (wide) and liquidated when the basis is strong (narrow). As the elevator manager purchases cash grain, futures are sold simultaneously. Returns to storage will be realized if the cash price increases relative to the futures price (basis narrows). Presumably, the basis must narrow by more than the elevator manager's opportunity cost of holding cash grain in storage. An example of a storage hedge may be summarized as follows:

Example of a Storage Hedge

Date	Cash Market	Futures Market	Basis
September 1	Buy Cash Grain at $3.50[a]	Sell Dec. Futures at $4.50	-$1.00
December 1	Sell Cash Grain at $3.60[b]	Buy Dec. Futures at $4.35	- 0.75
Net Grain:	10¢ Cash Market		
	15¢ Futures Market		
	25¢ Gain = 25¢ Gain in Cash/Dec. Futures Basis		

[a]Local elevator board price.
[b]Terminal elevator price of $4.10 per bushel minus 60¢ per bushel for transportation and margin.

A positive return to storage will be realized if the gain in basis (25 cents per bushel) is greater than the opportunity cost of storage. The opportunity cost may be defined as the return that could have been earned on an alternative investment. Assuming a return of 18 percent could have been earned on an alternative investment, the opportunity cost is calculated as follows:

$$OC_s = [(\frac{i}{360} * n * P_g] + r$$

where: OC_s = opportunity cost of storage (per bushel)

i = return on the next best alternative investment

n = number of days storage hedge is in effect

P_g = price of grain (terminal elevator price minus transportation and margin)

r = revenue that could have been earned from farmer-owned stored grain (warehouse receipts)

or, $OC_s = [(\frac{.18}{360} * 90 * \$3.50] + 6¢ = 21.75¢$ per bushel.

In this example, the gain from the storage hedge (25 cents) was greater than the opportunity cost of storage (21.75 cents).

In summary, elevator managers may earn returns to storage by buying and storing grain during off-peak periods. Managers should keep in mind that the elevator's storage space should not be committed during peak demand periods and that basis relationships should be studied carefully. Two basic decisions are to be made: 1) determining how much storage space to sell and 2) deciding which grain(s) to choose so returns to storage may be optimized. The basis must strengthen by more than the elevator manager's opportunity cost of storage in order for the storage hedge to be a profitable venture.

Delayed Pricing Hedge

No price established (NPE) or delayed pricing contracts (DPC) offer an alternative grain marketing concept to country elevator managers in North Dakota. The contract involves delivery of grain, with the pricing function to take place at a later date. The duration of the contract varies but is

normally negotiated for less than one year. The seller may price the grain at any time within the duration based on either: 1) elevator board price (cash price NPE) or 2) a fixed amount over or under a particular futures contract month (basis fix NPE). NPE contracts that are priced immediately are effectively cash sales. Ownership is transferred to the elevator once the NPE grain is delivered by the farmer.

Basis Fix NPE Contracts

Basis fix NPE contracts are usually negotiated based on a particular cash/futures price relationship on the day the farmer delivers the grain. For example, a basis fix NPE contract could be negotiated for 50 cents per bushel under the December futures price. The farmer would receive the December futures price less 50 cents per bushel on the day the grain is sold. Upon delivery by the farmer, the elevator manager has the discretion to store or sell the grain. Grain that is sold by the elevator should be replaced with an equivalent amount of futures in order to reduce price risks. Examples A, B, and C depict results of basis fix NPE transactions. In each example, the farmers establish a selling price of 50 cents per bushel under the December futures. This "basis" is established on October 1 and the grain is to be priced by the farmer by December 1. In Examples A and B the elevator manager sells the NPE grain and replaces it with futures on October 7. In both instances the manager establishes a basis at a different level compared to the farmer. If the cash/futures basis established by the manager is wider (narrower) than the basis established by the farmer, a gain (loss) will occur. In Example A, a basis of -65 cents was established by the elevator manager and a basis of -50 cents was established by the farmer. Consequently, a loss of 15 cents per bushel accrued to the manager. In Example B, the manager established a basis of -35 cents and

realized a gain of 15 cents per bushel. The gain or loss is zero if the elevator manager and farmer establish an equal basis (Example C).

EXAMPLE A
Decrease in Basis
(Basis Fix NPE Contract)

Date	Cash Market	Price	Futures Market	Price	Basis
October 1	Farmer establishes basis of 50¢/bu. under the Dec. futures				
October 7	Elevator sells NPE grain	$4.10	Elevator buys Dec. futures	$4.75	$-0.65
November 15	Farmer prices and elevator buys NPE grain	4.35	Elevator sells	4.85	-0.50*
Gain (Loss)		(0.25)		0.10	
Net Gain (Loss)					(0.15)

*Farmer established basis on October 1.

Cash Price NPE Contracts

Cash price NPE contracts differ from basis fix contracts in that the grain is contracted to be sold based on a local cash price. Farmers normally receive the elevator's posted board quotation on the day the grain is priced. Elevator managers have the discretion to either store or sell the grain upon delivery by the farmer. Managers assume no price risk until the grain is sold. Replacing the cash grain with futures reduces price risk but does not eliminate it since changes in basis levels will affect the results of the transaction.

The probability of selling cash price NPE grain in the cash market and not replacing it with futures depends on price movements subsequent to sale (Example D). An elevator manager will realize a gain (loss) if the cash price decreases (increases) after the grain is sold.

EXAMPLE B
Increase in Basis
(Basis Fix NPE Contract)

Date	Cash Market	Price	Futures Market	Price	Basis
October 1	Farmer establishes basis of 50¢/bu. under the Dec. futures				
October 7	Elevator sells NPE grain	$4.30	Elevator buys Dec. futures	$4.65	$-0.35
November 15	Farmer prices and elevator buys NPE grain	4.35	Elevator sells Dec. futures	4.85	-0.50*
Gain (Loss)		(0.05)		0.20	
Net Gain (Loss)					0.15

*Farmer established basis on October 1.

EXAMPLE C
No Change in Basis
(Basis Fix NPE Contract)

Date	Cash Market	Price	Futures Market	Price	Basis
October 1	Farmer establishes basis of 50¢/bu. under the Dec. futures				
October 1	Elevator sells NPE grain	$4.00	Elevator buys Dec. futures	$4.50	$-0.50
November 15	Farmer prices and elevator buys NPE grain	4.35	Elevator sells Dec. futures	4.85	-0.50*
Gain (Loss)		(0.35)		0.35	
Net Gain (Loss)					0.00

*Farmer established basis on October 1.

EXAMPLE D
Sale of Cash Price NPE Grain Without Purchase of Futures

Date	Transaction	Price Decrease	Price Increase
October 1	Elevator sells NPE grain	$4.00	$4.00
November 15	Farmer prices and elevator buys NPE grain	3.65	4.35
Gain (Loss)		0.35	(0.35)

Elevator managers who sell cash price NPE grain and replace it with futures reduce price risk to changes in basis levels.[25] If the basis increases after a basis is established, a loss will occur (Example E). A gain will occur if the basis decreases subsequent to the establishment of a basis (Example F).

EXAMPLE E
Sale of Cash Price NPE Grain With Purchase of Futures
(Increase in Basis)

Date	Cash Market	Price	Futures Market	Price	Basis
October 1	Elevator sells NPE grain	$4.00	Elevator buys Dec. futures	$4.50	$-0.50
November 15	Farmer prices and elevator buys NPE grain	4.35	Elevator sells Dec. futures	4.60	-0.25
Gain (Loss)		(0.35)		0.10	
Net Gain (Loss)					(0.25)

EXAMPLE F
Sale of Cash Price NPE Grain With Purchase of Futures
(Decrease in Basis)

Date					
October 1	Elevator sells NPE grain	$4.00	Elevator buys Dec. futures	$4.50	$-0.50
November 15	Farmer prices and elevator buys NPE grain	3.65	Elevator sells Dec. futures	4.40	-0.75
Gain (Loss)		0.35		(0.10)	
Net Gain (Loss)					0.25

Store/Sell Decision

Elevator managers should consider several factors in determining whether to store or sell NPE grain. Among the more important factors are: 1) service charges; 2) interest rates; and 3) expected changes in basis.[26]

---

[25] A recent study establishes that basis risk is less than flat price risk in the case of grains traded as the Minneapolis Grain Exchange. See Wilson, William W., Hedging Effectiveness of U.S. Wheat Futures Markets, Ag Econ Report No. 165, Dept. of Agr. Econ., North Dakota State University, Fargo, October 1982.

[26] For a discussion on the Minneapolis spring wheat basis see Wilson, William W., A Statistical Analysis and Forecasting Model of the Minneapolis Spring Wheat Basis, Dept. of Agr. Econ., North Dakota State University, Fargo, forthcoming.

Producers are normally assessed service charges by elevator managers for grain contracted under delayed pricing arrangements. The amount of the service charge may vary but is usually equal to the price of commercial storage. The service charge is commonly paid throughout the duration of the NPE contract regardless of whether the grain is stored or sold. If elevator managers sell the NPE grain, they can earn interest on the money until the farmer prices his grain. All three variables should be considered by managers in evaluating the store/sell decision.

Basis Fix NPE Contract. Returns from storing and selling basis fix NPE grain must be calculated in order to determine which option is preferred. Once the grain is delivered by the farmer and a basis established, changes in the cash/futures price relationship affect the profitability of storing the grain. Returns from storing and selling basis fix NPE grain may be summarized as follows:

1) Storage of basis fix NPE grain: $R_1 = E\Delta B + S_c$
2) Sale of basis fix NPE grain: $R_2 = i + S_c$

where: R_1 = Expected return from storing basis fix NPE grain
R_2 = Expected return from selling basis fix NPE grain
$E\Delta B$ = Expected change in basis
S_c = Service charge
i = Interest income

The grain should be stored if R_1 is greater than R_2 and sold if R_2 is greater than R_1. Therefore, the decision rules are to store if $E\Delta B$ is greater than i and sell if i is greater than $E\Delta B$.

Expected change in basis ($E\Delta B$) must be greater than the interest (i) foregone between the time a basis fix NPE contract is initiated and the grain is sold by the elevator manager for storage to be profitable. Alternatively, interest income must be greater than the expected change in basis in order for the sell alternative to be profitable. Example G contains cash and futures market prices for a hypothetical basis fix NPE scenario. In the example, a farmer delivers

grain on September 1 and agrees to a selling price of 50 cents per bushel below the March futures. The elevator manager initially stores the grain since he anticipates an increase in basis. On October 1, the grain is sold in the spot market and replaced with an equivalent amount of March futures. The elevator manager's decision to sell was based on the assumption basis would no longer strengthen by an amount greater than interest. Once the grain is sold and replaced with futures, changes in basis no longer affect the elevator manager's position. Assuming an 18 percent interest rate and 2 cents per bushel monthly service charge, the calculations from September 1 to October 1 are as follows:

$R_1 = E\Delta B + Sc = 15¢ + 2¢ = 17¢$ per bushel
$R_2 = i + Sc = (\frac{.18}{360} * \$4.00 * 30 \text{ days}) + 2¢ = 6¢ + 2¢ = 8¢$ per bushel
$R_1 \geqq R_2$ therefore, storage is the more profitable alternative.

October 1 - February 1:
$R_1 = E\Delta B + Sc = -15¢ + (2¢ * 4 \text{ months}) = -7¢$ per bushel
$R_2 = i + Sc = (\frac{.18}{360}) \times \$4.10 * 120 \text{ days}) + (2¢ * 4 \text{ months}) =$
$24.6 + 8¢ = 32.6¢$ per bushel
$R_2 \geqq R_1$; therefore, sale is the more profitable alternative.

Based on the above calculations, the elevator manager would increase the return on NPE grain by storing from September 1 to October 1, and selling on October 1. However, if the basis changed by less than interest, it would have been more profitable to sell the NPE grain on September 1.

Cash Price NPE Contracts. Analyzing the decision to store or sell cash price NPE grain is based on the same factors that were used to analyze the decision to store or sell basis fix NPE grain--service charges, interest income and expected changes in basis. Basis changes do not affect the profitability of cash price NPE grain transactions until the elevator manager sells the grain and replaces it with a comparable amount of futures. Once the grain is sold and futures purchased, decreases in basis increase trading profits while

EXAMPLE G
Increase in Basis
(Basis Fix NPE Contract)

Date	Cash Market	Price	Futures Market	Price	Basis
September 1	Farmer establishes basis of 50¢/bu. under March futures				
October 1	Elevator sells NPE grain	$4.10	Elevator buys March futures	$4.45	$-0.35
February 1	Farmer prices and elevator buys NPE grain	4.35	Elevator sells March futures	4.85	-0.50*
Gain (Loss)		(0.25)		0.40	
Net Gain (Loss)					0.15

*Farmer established basis on September 1.

increases in basis decrease profits. Analyzing the store/sell decision is based on the following returns from each option:

1) Storage of cash price NPE grain: $R_1 = Sc$
2) Sale of cash price NPE grain: $R_2 = Sc + i - E\Delta B$

where: R_1 = Expected return from storing cash price NPE grain
R_2 = Expected return from selling cash price NPE grain
Sc = Service charge
i = Interest income
$E\Delta B$ = Expected change in basis[27]

The grain should be stored if R_1 is greater than R_2 or sold if R_2 is greater than R_1. For example, assume on September 1 a farmer delivers grain and agrees to price it within six months. Further assume that the elevator manager expects the basis to increase fairly substantially during the next two months and either increase at a lower rate or decrease after that time. Based on these assumptions, the elevator manager decides to store the grain until November 1 and then sell it and replace it with March futures (Example H). R_1 and R_2 may be calculated in order to demonstrate the results:

[27]For a cash price NPE transaction, a positive change in basis decreases returns while a negative change increases returns.

September 1 - November 1:

$R_1 = Sc = 2¢ * 2 \text{ months} = 4¢$

$R_2 = Sc + i - E\Delta B = (2¢ * 2 \text{ months}) + (\frac{.18}{360} * \$4.00 * 60 \text{ days}) - (25¢)$
$= 4¢ + 12¢ - 25¢ = -9¢$

$R_1 \geqq R_2$; therefore, storage is the more profitable alternative.

November 1 - March 1:

$R_1 = Sc = 2¢ * 4 \text{ months} = 8¢$

$R_2 = Sc + i - E\Delta B = (2¢ * 4 \text{ months}) + (\frac{.18}{360} * \$4.50 * 120 \text{ days}) - (20¢)$
$= 8¢ + 27¢ - 20¢ = 15¢$

$R_2 \geqq R_1$; therefore, sale is the more profitable alternative.

The above calculations are broken down into two periods, September 1 to November 1 and November 1 to March 1. The basis movement in the first period (September 1 to November 1) was such that storing the grain was profitable (i.e., R_1 was greater than R_2). The basis movement in the second period (November 1 to March 1) resulted in the sale option being profitable (i.e., R_2 was greater than R_1).

If the elevator manager's decision had been to sell on September 1 (rather than segregate the transaction into two periods), the calculations would have been as follows:

September 1 - March 1:

$R_1 = Sc = 2¢ * 6 \text{ months} = 12¢$

$R_2 = Sc + i - E\Delta B = (2¢ * 6 \text{ months}) + (\frac{.18}{360} * \$4.00 * 180 \text{ days}) - (45¢)$
$= 12¢ + 36¢ - 45¢ = 3¢$

$R_1 \geqq R_2$; therefore, storage would have been the preferred alternative.

The elevator manager earned 19 cents per bushel by breaking the NPE transaction down into two periods. He earned 4 cents per bushel in the first period by storing the grain and earned 15 cents per bushel in the second period by selling the grain in the cash market and replacing if with futures. Alternatively, had he chosen the preferred option for the entire period (storage from September 1 to March 1) 12 cents per bushel would have been earned. It may be profitable to identify more than one period in selecting marketing strategies for NPE grain.

EXAMPLE H
Sale of Cash Price NPE Grain With Purchase of Futures
(Increase in Basis)

Date	Cash Market	Price	Futures Market	Price	Basis
September 1	Farmer delivers NPE grain	$4.00	March futures price	$4.75	$-0.75
November 1	Elevator sells NPE grain	4.50	Elevator buys March futures	5.00	-0.50
March 1	Farmer prices and elevator buys NPE grain	4.55	Elevator sells March futures	4.85	-0.30
Gain (Loss)		(0.05)		(0.15)	
Net Gain (Loss)					(0.20)*

*Change in basis from November 1 to March 1.

Refilling Storage Space

Service charges in the above examples were computed to reflect empty storage space once the NPE grain was removed. Refilling storage space with "new" grain adds another dimension to the store/sell decision since additional storage charges may be earned. Storage space may be refilled more easily at harvest time compared to spring time, so managers should consider the time of year and potential of refilling storage space before NPE grain is removed from storage. When storage space can be refilled, the returns associated with each option are:

Cash Price NPE Grain:

1. Storage: $R_1 = Sc$
2. Sale: $R_2 = 2S_c + i - E\Delta B$

If the same prices are assumed as are contained in Example H, the decision may be analyzed as follows:

Cash Price NPE Grain

September 1 - November 1:

$R_1 = Sc = 2¢ * 2 \text{ months} = 4¢$

$R_2 = 2S_c + i - E\Delta B = 2(2¢ * 2 \text{ months}) + (\frac{.18}{360} * \$4.00 * 60 \text{ days}) - 25¢$
$= 8¢ + 12¢ + 12¢ - 25¢ = -5¢$

$R_1 \geq R_2$; therefore, storage is the preferred alternative.

November 1 - March 1:

$R_1 = S_c = 2¢ * 4 \text{ months} = 8¢$

$R_2 = 2S_c + i - E\Delta B = 2(2 * 4 \text{ months}) + (\frac{.18}{360} * \$4.50 * 120 \text{ days}) - 20¢$
$= 16¢ + 27¢ - 20¢ = 23¢$

$R_2 \geqq R_1$; therefore, sale is the preferred alternative.

Elevator managers may earn "double" storage credits when storage space is refilled; credits are earned on the NPE grain that is removed and the grain that is used to refill the storage space. If storage space cannot be refilled, the service charges on both sides of the equation are offsetting: for cash price NPE grain, $R_1 = Sc$, $R_2 = Sc + i - E\Delta B$; setting the two equal yields: $R_1 = R_2$, or, $Sc = Sc + i - E\Delta B$, or, $i - E\Delta B = 0$. For basis fix NPE grain, $R_1 = E\Delta B + Sc$, $R_2 = i + Sc$, setting the two equal yields: $R_1 = R_2$, or, $E\Delta B + Sc = i + Sc = i - E\Delta B = 0$.

Delayed Pricing as a Management Tool

Delayed pricing arrangements can be a favorable grain marketing alternative for both elevator managers and producers. Both may gain increased marketing flexibility and coordination through effective utilization of NPE contracts. Advantages which may accure to elevator managers who store their grain inventory on NPE contracts as opposed to warehouse receipts include:[28]

1) Volume may be increased since the grain may be moved at the manager's discretion;
2) It allows for increased utilization and/or better coordination of privately owned and leased transportation equipment;
3) It increases the opportunity to take advantage of high basis levels; and
4) More managerial control over stocks.

The uniqueness in owning NPE grain is that elevator managers may either store or sell grain at their own discretion. Because of this store/sell option, elevator managers are afforded the opportunity to take advantage of favorable

---

[28] Grain Terminal Association, unpublished circulars, St. Paul, Minnesota.

market conditions. For example, managers may be able to handle more grain during peak periods by offering NPE contracts as opposed to storage contracts. Producers often prefer not to price their grain at harvest time and NPEs allow them to defer pricing while simultaneously allowing elevator managers the opportunity to sell the grain and maintain needed storage space. Elevator managers are able to increase volume by handling grain that may not have been sold exclusive of an NPE contract. In short, the NPE contract allows elevator managers increased flexibility in procuring and marketing grain.

Producers gain in a number of ways.[29] First, they are offered another marketing alternative which results in increased marketing flexibility. Primarily, if storage space is limited, they can sell even though they are not satisfied with price. Second, they may gain from increased efficiency experienced by the elevator. Third, the market may stabilize somewhat as grain flows are smoothed out. Fourth, basis movements may be such that the value of binspace over time is higher than the delayed pricing service charge. Fifth, loss due to quality deterioration is shifted once the grain is delivered. And sixth, producers may negotiate a service charge (or no service charge) with the elevator operator depending on circumstances.

Commodities not Actively Traded at Futures Markets

Country elevator managers' marketing flexibility is limited somewhat by handling grains that are not traded actively in a future delivery market. As indicated in a previous section, elevator managers could choose between a to-arrive sale or a short hedge and subsequent spot sale (transit hedge) in selling grain in the cash market. Elevator managers do not have this alternative when merchandising grain that is not traded actively at a futures market. Managers are forced to use a cash hedge (usually to-arrive) or assume price

---

[29] Ibid.

risks by selling the grain on the spot market and may be unable to take full advantage of potentially profitable basis movements in many cases. The absence of futures contracts for some grains decreases elevator managers flexibility in marketing and ultimately limits the number of alternative grain contracts that can be used. This may have consequences on larger elevator facilities as they expand to take advantage of multiple car grain rates.

Low Volume Commodities

The merchandising of low volume commodities and specialty crops may also pose certain problems for high throughput elevator facilities. Many crops cannot be assembled in volumes sufficient enough to load multiple car lots. Handling these grains may affect the overall grain merchandising activity of the plant. In particular, needed binspace may be tied up and turnover lowered if these commodities are handled during periods of peak grain movements. Managers of large country elevators may be faced with certain problems in determining how to handle specialty and low volume grains. Margin requirements, for example, may have to be increased if these crops are handled in high throughput facilities.

Managers of two subterminal-satellite elevator systems have proposed that small volume grain shipments would be handled through one of the feeder (satellite) stations. Crops that could not be assembled in volumes large enough to fill a multiple car shipment would be trucked or transported in single car rail shipments from satellite locations to points of destination. Both managers indicated that small volume crops could be handled at main facilities during off-peak periods, but indicated that handling these crops during peak periods may cause bottlenecks in throughput by tying up storage space.

Managers of other facilities indicated that handling low volume crops may not necessarily differ from typical country elevator practices. These managers indicated they would attempt to gain efficiencies in handling and

transporting certain high volume grains, but would forego efficiencies in handling low volume crops. The per unit profit on the high volume crops would be larger than the per unit profit on the low volume crops and a form of cross-subsidization would occur. Another alternative available to subterminal facilities would be to specialize in handling high volume crops and not handle those with lower volumes. At least one facility was being constructed in 1981 with this type of specialization apparent. The facility was proposed to handle only durum.

Bond Protection of NPE Contracts

Public warehouses operating in North Dakota are required to be licensed under the provisions of North Dakota Century Code 60-02-07. Section 60-02-09 of the Code requires a bond to be filed by all track buyers and public warehousemen seeking licenses. The bond, among other things, is an assurance that public warehousemen and/or track buyers comply with the provisions of law and rules and regulations relating to grain storage and merchandising. Consequently, should a grain dealer be unable to make payment to a producer for grain purchased, the producer may have recourse for recovery under the bond in certain instances.

Dooley found that NPEs are legal contracts as such but are not subject to the protection of the warehouse bond under North Dakota Century Code 60-02-09 (7).[30] The lack of bond protection means that parties entering into delayed pricing arrangements with elevators are treated as general creditors, as opposed to secured creditors, should the elevator be unable to meet financial obligations. While delayed pricing contracts are not under bond protection in North Dakota and some other states, they are covered in Illinois. Bond

---

[30] Dooley, Frank J., Delayed Pricing Contracts: Application to North Dakota Grain Marketing, Transportation Law Paper, Upper Great Plains Transportation Institute, North Dakota State University, Fargo, September 1980.

protection is granted to NPEs under Paragraph 307 of the Illinois Grain Dealers Act.[31] As stated in the Act:

> "If a grain dealer should fail or refuse to make payment ... in the case of deferred pricing, delayed pricing, price-later, or similar contractual arrangements,... the producer... is entitled to the benefits of the grain dealer's bond."

Paragraph 310 of the Illinois Act outlines the printing of price later contracts. The Illinois Department of Agriculture, under provisions of the Act, requires that:

1) Only those having a grain dealer's license may print price later contracts;
2) The agency must possess a $5,000 surety bond;
3) Price later contracts shall be numbered consecutively and a complete record retained; and
4) Duplicate copies of all printing invoices must be forwarded to the Department of Agriculture.

In addition, Paragraph 311 requires the grain dealer to maintain grain, rights in grain, proceeds from the sale of grain, or a combination thereof totalling 90 percent of the dealer's obligations for commodities purchased by price later.

Several bonding companies, including the one that provides surety bonds for the majority of public warehouses in North Dakota, have indicated a preference not to include NPEs under the protection of a bond. Bonding companies have stated that granting bond protection to NPEs would result in substantially higher bonding costs to public warehouses.[32] Consequently, legislative action requiring bond protection for delayed pricing agreements may be opposed by both bonding companies and public warehouses.[33] Some members of the North Dakota

---

[31] Illinois Department of Agriculture, Rules and Regulations, Grain Dealers Act, revised statutes, Ch. III, paragraph 301-311, Division of Agricultural Industry Regulation, Bureau of Warehouses, January 1, 1980.

[32] Dooley, op. cit., p. 11.

[33] At present, country elevators in North Dakota are not required by law to maintain collateral on NPE grain. Bonding company officials feel a high degree of risk is involved with the use of NPE contracts since the entire selling price may be used by the elevator for speculative purposes.

Grain Dealers Association have indicated that regulation may not be warranted at this time. However, as NPE use becomes more prominent throughout the state, some form of regulation may be required due to the risk factor involved in selling NPE grain that is not replaced with futures. Also, producers may seek some form of bond protection to reduce their risk.

FACTORS AFFECTING THE DEVELOPMENT OF LARGE COUNTRY ELEVATORS

This section contains an analysis of certain factors that may enhance or lessen the attractiveness of contructing large country elevators in North Dakota. Included in the analysis are areas which may prove to be efficient or inefficient as larger grain handling facilities develop.

Procurement of Grain for Multiple Car Shipments

Constructing new and upgrading existing elevator facilities to accomodate multiple car grain shipments poses many issues for managers and board members. Among these issues are procuring and coordinating multiple car lots of grain. Large volumes are needed to fill 26-car and 52-car multiples so conventional grain procurement practices may not be practical. Most subterminals are designed as high throughput facilities precluding extensive storage capacity and necessitating precise coordination in procuring and shipping grain. Currently, two grain procurement methods are being used by existing subterminals and are proposed to be used by developing facilities in North Dakota: 1) alternative grain procurement contracts; and 2) mergers.

Alternative Grain Contracts

Relying strictly on outright purchases of grain from farmers as they deliver it presents certain logistical problems to elevator managers assembling large volumes of grain. Elevator managers may find it advantageous to use various grain procurement contracts to better coordinate multiple car grain

shipments, particularly 26 and 52 car shipments. Both NPE and forward contracts offer elevator managers benefits in assembling large volumes of grain. First, since the exact date of delivery is known when forward contracts are used, managers have precise knowledge of volume and temporal relationships. Second, use of NPE contracts allows managers to purchase grain that may not have been delivered if the pricing function could not be deferred. Supplementing outright cash purchases with use of both forward and NPE contracts provides elevator managers flexibility in coordinating large volume shipments and presents additional alternatives (and incentives) to farmers for delivering grain.

Merger

The purpose of a merger is to develop a strong viable entity capable of competing within an industry. The reason for recent realignment within the grain industry (country elevators) in North Dakota has been to attain economies of transportation, trade area, and size. Mergers allow country elevators the opportunity to align facilities to exploit efficiencies normally associated with subterminal elevators. One of these efficiencies is rate savings based on multiple car and unit train grain shipments, and mergers allow an alternative in assembling the required volume of grain.

Certain areas of the state are experiencing cooperative consolidation with fast-loading (subterminal) grain facilities being constructed. The facilities are normally located on mainlines or viable branch lines that have sufficient grain volume to load 26 and/or 52 car multiples. Conceptually, the subterminal is supported by the consolidated elevators which act as satellites or feeder stations. The satellite system enables the cooperative subterminal to procure sufficient volumes of grain for multiple car shipments. Most subterminals will undoubtedly attain higher economies of throughput than

could have been attained through the independent grain marketing of the satellite elevators. In addition, economies in transportation may be exploited more efficiently (increase in multiple car shipments). Nonetheless, certain inefficiencies may arise as the subterminal concept develops. Some of these inefficiencies may include (but are not limited to):

1) Hauling against market;
2) Double handling of grain; and
3) Underutilization of capacity.

Hauling Against the Market

An example of "hauling against the market" is depicted in Figure 2. Assume that subterminal (S) is assembling grain for a unit train shipment to terminal (T). Further assume that the subterminal is receiving grain from substations A, B, C, and D.

Substations A, B, and C truck to the subterminal while D ships by truck or rail. The inefficiency that occurs in this example (hauling against the market) results from substation D shipping grain east to S, which in turn loads out the grain for a unit train movement west. However, this inefficiency may be justified if substation D cannot market the grain west at a lower cost than S. For example, if rate savings for a unit train shipment from S to T more than offset substation D's handling and transportation costs to S plus handling costs at S, hauling against the market may be justified in the sense that economies of transportation may be exploited. However, unit train and multiple car grain rates are not set in perpetuity and economic advantages may not continually accrue to multiple car grain shippers.

Double Handling

Inefficiencies in subterminal operations may also exist with respect to double handling of grain. The concept of double handling is present in the example depicted in the previous section, but applies to all substations as

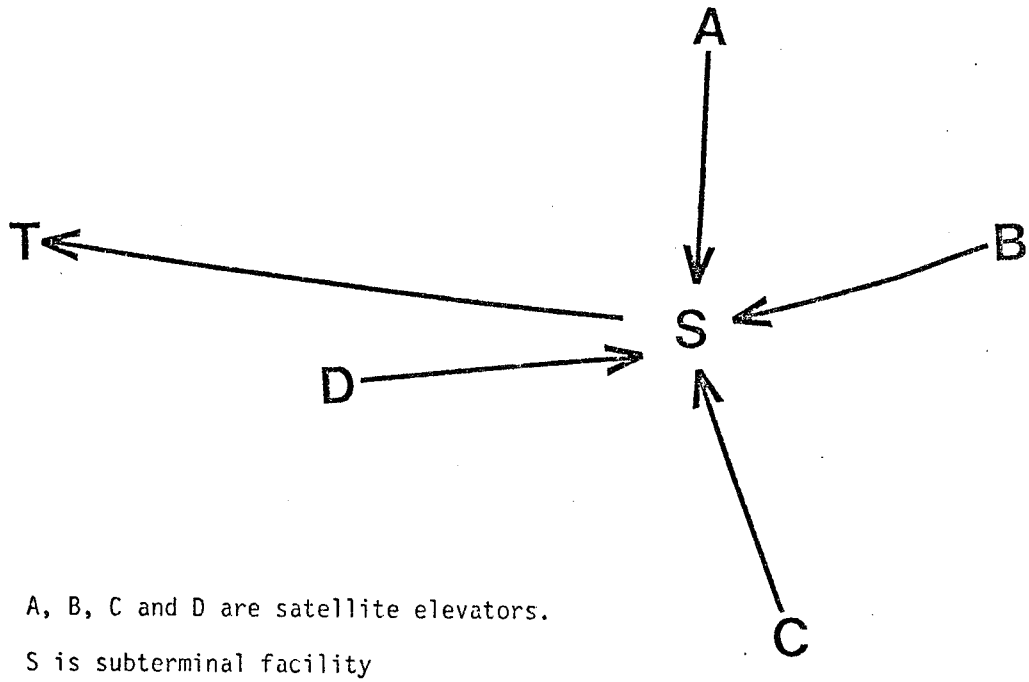

A, B, C and D are satellite elevators.

S is subterminal facility

T is terminal elevator.

⟶ is the flow of grain.

Figure 2. Hypothetical Example of Hauling Against the Market

well. For example, elevation and storage costs at the satellite points are "extra" costs to the subterminal compared to grain shipped directly to the main facility from the farm. However, it may be the policy of the subterminal to provide satellite stations to farmers for their own marketing convenience.

Economics may not dictate the use of satellite elevators in the long-run. However, in the short-run, producers have proximity to a viable market outlet and developing subterminals have a supporting facility that may be vital to their existence. Additional costs associated with double handling, theoretically, allow room for competition. Consequently, the subterminal-satellite system may be forced to abandon some or all of their substations in order to compete with more efficient facilities in the future.

Underutilization

Grain subterminals are designed as relatively high throughput facilities. Turnover ratio is a measure of how efficiently grain warehouses utilize capacity in relation to volume and is calculated by dividing volume by storage capacity. For example, an elevator having storage capacity of 250,000 bushels and annual volume of 1 million bushels would have a turnover ratio of 4:1 or 400 percent (1,000,000 ÷ 250,000). High turnover indicates storage functions are minimal and grain merchandising is emphasized, while low turnover indicates storage is a relatively important function of the elevator.

Most subterminal operators who were interviewed indicated that turnover ratios between 10:1 and 20:1 were expected for their facilities. Since most developing subterminals are being constructed with storage capacity of about 500,000 bushels, volumes would be roughly 5 million to 10 million bushels.[34] Underutilization of these facilities implies increasing average costs and,

---

[34]Most feasibility studies reviewed indicated planned capacity at 430,000 bushels.

as a result, is an important factor to consider in planning larger elevator facilities.[35]

Construction costs of various subterminals varied between $1.5 million and $4.0 million depending on the degree of automation and capacity for future expansion.[36] Consequently, these high investment costs indicate that facilities must be fully utilized. Preliminary analysis indicates that underutilization of plant (low turnover) is directly related to unprofitability of subterminals.[37] In order to capitalize the investment in these facilities, subterminals must handle large volumes of grain. For example, a $2.5 million facility financed at 14 percent interest would require volume of 3.5 million bushels at 10 cents per bushel margin in order to pay for the interest on the investment. Higher capitalization of facilities would require handling larger volumes and/or larger margins. Doubling throughput to 7 million bushels would decrease interest costs to 5 cents per bushel.

Since subterminals are generally recognized as being larger facilities than normal country elevators, 68 elevators with storage capacities of 400,000 bushels and larger were examined along with turnover ratios for crop year 1978-79 (Table 10). Only five facilities turned grain over six times or more. The most common turnover ratio was between 2 and 3.99:1. These low turnover ratios indicate that both underutilization and excess capacity existed in 1978-79, and may continue to exist today, with respect to larger grain elevators. Subterminals must be extremely more efficient with respect to throughput than are current facilities if they are to be a profitable venture.[38] For the 68

---

[35]For a discussion on turnover ratios and effects on average csots, see Chase and Helgeson, op. cit.

[36]Personal communication with various subterminal elevator managers, 1981.

[37]Chase and Helgeson, op. cit.

[38]Ibid.

facilities examined, average storage capacity was 775,000 bushels while average turnover was 2.9.

TABLE 10. CAPACITY AND TURNOVER RATIOS OF 68 COUNTRY ELEVATORS, NORTH DAKOTA, 1978-79

Elevator Capacity	Turnover Ratio			
	0 - 1.99	2 - 3.99	4 - 5.99	Over 6
- -000 bushels- -	- - - - - - -Number of Elevators- - - - - - - -			
400 - 499	4	18	3	3
500 - 599	3	8	2	2
600 - 699	1	3	1	0
700 - 799	2	1	0	0
800 and over	9	7	1	0

SOURCE: Unpublished North Dakota Public Service Commission Statistics for 1978-79.

Underutilization of plant may occur due to two basic reasons: 1) over-development of facilities within trade areas or 2) insufficient production within trade areas. Both may be interrelated, but the first refers to "too many" facilities while the second refers to insufficient grain volume (production density) for a single facility. It is imperative that developing subterminals be aware of spatial considerations in order to exploit economies of handling and transportation.

Density of production and density of grain marketings are both important factors to consider in determining the feasibility of marketing grain in multiple car lots. Figure 3 contains country grain and oilseed concentration of off-farm sales for 1978. Assuming a 500,000-bushel subterminal elevator facility must attain a turnover ratio of 10:1 (volume of 5,000,000 bushels) in order to remain competitive, a facility operating in a white area (off-farm sales of less than 6,000 bushels per square mile) would require a minimum trade area of 833 square miles (5,000,000 ÷ 5,999). Alternatively, a subterminal operating in a more darkly shaded area (off-farm sales of 15,000 bushels per square mile or greater)

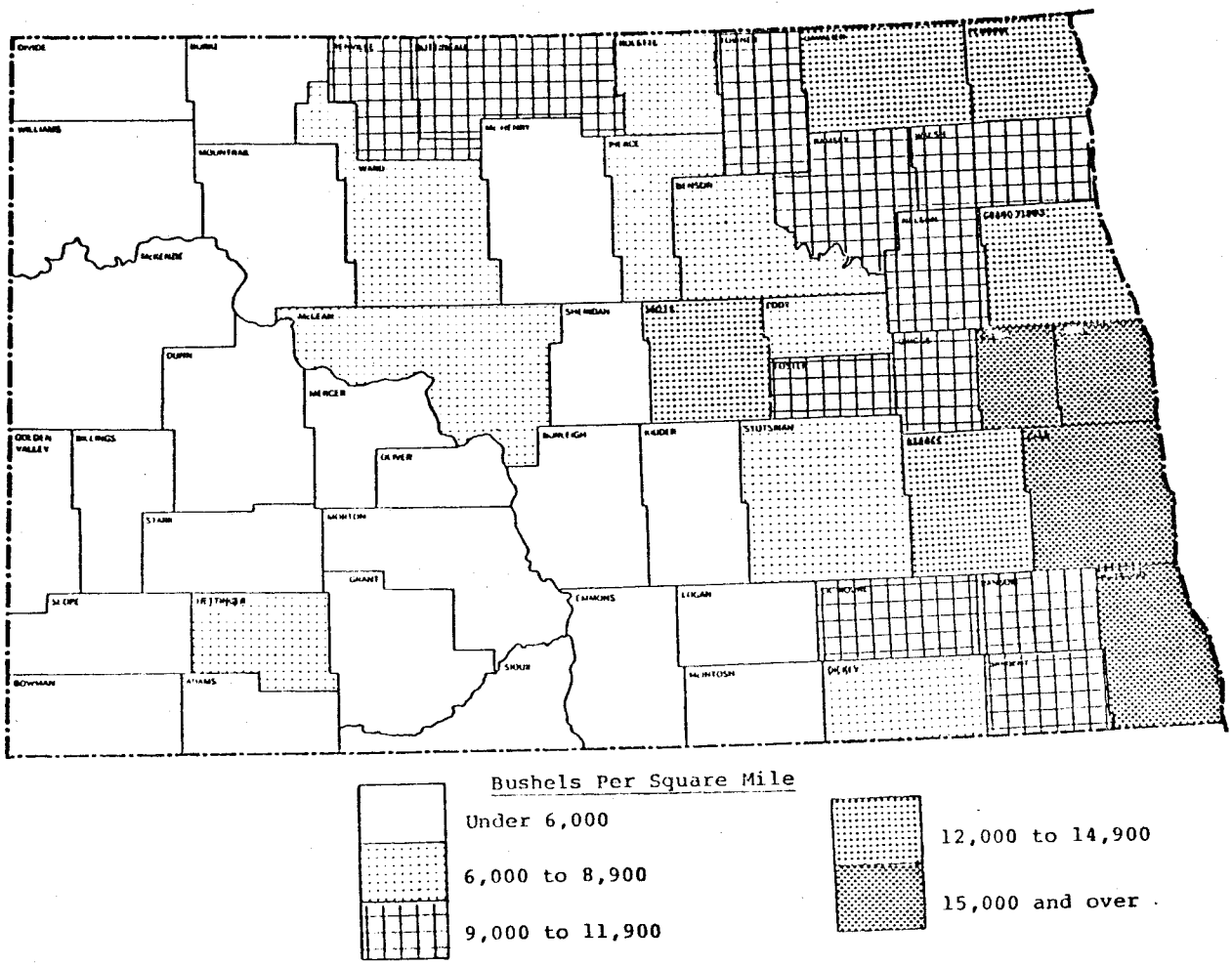

Figure 3. Concentration of Off-Farm Grain and Oilseed Sales, North Dakota 1978 Crop

SOURCE: Experience, Incorporated, A Study of the Shipping, Transport, and Port Needs for North Dakota's Grain and Oilseed Production, Minneapolis, Minnesota, June 1980.

would require a maximum trade area size of 333 square miles (5,000,000 ÷ 15,000). Both scenarios assume that the subterminal facilities account for the entire off-farm sales within the respective trade areas, e.g., competition does not account for any off-farm sales within the areas. If the required turnover ratio is increased to 15:1, the trade areas increase in size to a minimum of 1,250 square miles and a maximum of 500 square miles, respectively.

Table 11 contains alternative sizes of trade areas based on selected turnover ratios and concentration of grain and oilseed sales (marketing densities).

TABLE 11. SIZE OF TRADE AREAS BASED ON ALTERNATIVE MARKETING DENSITIES AND TURNOVER RATIOS, 500,000 BUSHEL GRAIN ELEVATOR FACILITY

Grain and Oilseed Sales	Trade Area Size* Turnover Ratio				
	5:1	7.5:1	10:1	15:1	20:1
Bu./Sq. Mile	Square Miles				
15,000 and over	167 (7.3)	250 (8.9)	333 (10.3)	500 (12.6)	667 (14.6)
12,000-14,900	168-208 (7.3- 8.1)	252-313 (9.0-10.0)	336-417 (10.3-11.5)	503-625 (12.7-14.1)	671-833 (14.6-16.3)
9,000-11,900	210-278 (8.2- 9.4)	315-417 (10.0-11.5)	420-556 (11.6-13.3)	630-833 (14.2-16.3)	833-1,111 (16.3-18.8)
6,000- 8,900	281-416 (9.5-11.5)	421-624 (11.6-14.1)	562-832 (13.4-16.3)	843-1,250 (16.4-19.9)	1,124-1,666 (18.9-23.0)
Under 6,000	417 (11.5)	625 (14.1)	833 (16.3)	1,250 (19.9)	1,667 (23.0)

*The radius of the trade area is in parentheses.

Origin Grades

Certain inefficiencies may be developing as the infrastructure of the grain handling system in North Dakota evolves. What was once efficient with respect to the "old" system may not be efficient for the "new" system. Grain grading may be one of these areas. For instance, a need for official origin grades may develop as more large country elevators begin to operate in North Dakota.

The development of official grain standards lends itself to efficiencies within the marketing system. These efficiencies include:[39] 1) operational efficiencies and 2) pricing efficiencies. Operational efficiencies are concerned primarily with the physical aspects involved in the grain merchandising process while pricing efficiencies are gained through accurate price establishment. Subterminals developing in North Dakota may gain operational efficiencies through the implementation of an official origin grading system. It is extremely important that grain merchandisers have precise knowledge of grain quality in both purchasing and selling functions. The operating margin required for a viable country elevator does not allow for buying a certain quality of grain and selling it as a lower quality grain.

Official inspections are generally performed by federal and state agencies, commodity exchanges, and certain private individuals. All must be licensed in order to grade grain officially. Historically, grain moving interstate from country elevators in North Dakota has been assigned official grades by inspectors at destination points. Official weights and grades at point of origin is an alternative to this process. Whether or not one is more efficienct than the other is not certain. However, certain advantages may accrue to grain handling facilities opting for official weights and grades at point of origin. Among these are: 1) lower carrying charges, 2) increased control of grain quality, and 3) increased blending opportunities.

Carrying charges increase for elevator operators as shipment to settlement times increase, other things equal. A survey conducted by the North Dakota Grain Dealers Association in May 1981 indicated that the average time between

---

[39] Sheperd, Geoffrey S., Gene A. Futrell, and J. Robert Strain, Marketing Farm Products, 6th Edition, Iowa State University Press, Ames, 1976, pp. 184-185.

shipment and settlement was 25.9 days.[40] Some officials in the grain trade feel that origin grades may decrease elevators' carrying costs. One individual indicated that delays between shipment and settlement could be cut by seven to ten days (and possibly more) if origin grading was substituted for destination grading.[41] Table 12 depicts carrying charge savings that could accrue to elevator operators if the average number of days from shipment to settlement could be decreased by implementing origin grades.

TABLE 12. CARRYING COSTS TO ELEVATORS BASED ON ALTERNATIVE SHIPMENT/ SETTLEMENT TIMES AND CARLOAD VALUES, 18 PERCENT INTEREST

	Carrying Cost				
	Days Shipment to Settlement				
Value of Carload[a]	26	25	24	20	15
	Dollars Per Carload				
16,500[b]	211.50	203.36	195.23	162.69	122.02
14,850[c]	190.35	183.03	175.71	146.42	109.82
13,200[d]	169.20	162.69	156.18	130.15	97.61
11,550[e]	148.05	142.35	136.66	113.88	85.41
9,900[f]	126.90	122.02	117.14	97.61	73.21

[a]Assumes 3,300 bushels per carload.
[b]3,300 bushels times $5.00 per bushel.
[c]3,300 bushels times $4.50 per bushel.
[d]3,300 bushels times $4.00 per bushel.
[e]3,300 bushels times $3.50 per bushel.
[f]3,300 bushels times $3.00 per bushel.

Relative to the 26-day average shipment to settlement time, two- and six-day reductions would yield carrying charge savings of $16 ($211-$195) and $49 ($211-$162) per car, respectively. These figures are based on $5 per bushel of grain, an 18 percent interest rate and 3,300 bushels of grain per carload. Assuming $4 per bushel of grain, the savings for two- and six-day reductions would be $13 and $39 per car, respectively.

---

[40]North Dakota Grain Dealers Association, Grainmen's Mirror, Vol. LVI, No. 12, Fargo, December 1981.

[41]Personal communication with member of Federal Grain Inspection Service.

Elevator operators may also increase grain quality control through the use of origin grades. Shipping commodities subject to destination grades can, and often does, prove costly to shippers.[42] Elevator operators are commonly discounted because the grain they shipped graded lower at destination than the unofficial grade at origin. Consequently, many shippers are not fully aware of the official grade at the time the grain is shipped. Official origin grading could prevent this and could increase the elevator manager's marketing awareness.

While elevator managers may benefit from establishing official origin grades, the cost of implementing such a system may outweigh the benefits. Logistics becomes a particular problem. Concentrating sufficient grain volume to assure economic viability appears to be a limiting factor of establishing origin grades. While some areas of the state may have sufficient production and marketing densities, many do not. Also, terminal elevator operators prefer official grades at point of destination as opposed to point of origin, so attempts to establish official origin grades in North Dakota may be opposed by some grain industry officials.

SUMMARY AND CONCLUSIONS

Summary

The purpose of this study was to present an overview of North Dakota's grain handling and transportation system. Specific objectives were to:

1) Examine the concept of shipping grain in multiple car units;
2) Describe various marketing alternatives available to country elevators;

---

[42] One elevator manager in North Dakota reported sending a number of cars of durum to the West Coast that was unofficially graded #1 Hard Red Amber durum (HAD) at origin. However, the grain was officially graded #2 HAD at the destination and was subject to discounts totalling 3 cents per bushel. Based on average hopper car capacities (about 3,300 bushels of wheat), the loss was roughly $100 per car.

3) Examine the concept of delayed pricing; and
4) Present possible problem areas for potential subterminal facilities.

Impetus for Multiple Car Shipments and Sales

The number of country elevators operating in North Dakota has declined steadily throughout much of the 1900s. Over 1,800 facilities were in operation in 1920 compared to less than 600 in 1980. During this same time period, average plant capacity increased from 30,000 bushels to over 260,000 bushels--an increase of nearly 900 percent. The average trade area size has also increased, from roughly 225 square miles in 1920 to about 785 square miles in 1980.

Multiple car grain rates, first implemented in North Dakota in December 1980, provide an economic incentive to elevator managers to ship grain in multiple car lots. Discounts are offered by the railroads to shippers on various 3-car, 10-car, 15-car, 26-car, 52-car, and 54-car tenders. Generally, the rate decreases as the number of cars shipped increases. Based on 1981 rates, certain shippers could have saved as much as $26,000 on 52-car shipments relative to single car shipments. The rate differential was more pronounced in 1982 and some shippers could have saved roughly $50,000 on 52-car shipments compared to single car shipments.

The traditional grain marketing system in North Dakota is expected to experience some change as subterminal elevators develop. More probable changes include a further reduction in the number of country elevators operating in the state and a somewhat redirected flow of grain. While elevator numbers have been declining steadily in the past, the development of a high-throughput, lower-cost network of subterminals could ultimately hasten the demise of many traditional country elevators. The flow of grain, which has historically been farm to country elevator to terminal elevator, also may change. The

alternative flow of grain will likely include both farmers and country elevators delivering to subterminals prior to interstate shipment.

Producers may be required to increase on-farm storage capabilities or use existing country elevators as storage centers as subterminals develop. Most facilities are being planned as high throughput facilities and require little storage capacity in relation to anticipated volume. Many producers may be required to store more grain longer before it is sold.

Subterminal development may also have impacts on the roles of cash grain merchandisers and central markets. Many grain officials believe that managers of subterminals may utilize direct sales to terminal markets and processing plants more than traditional country elevator managers. More grain may bypass cash grain merchants and central markets under a subterminal marketing concept.

Grain Merchandising Alternatives Available to Country Elevators

Elevator managers rely mainly on cash purchases for procuring grain from farmers. Over two-thirds of the hard red spring wheat, durum, barley, and sunflower purchases were cash procuremnets in 1981. Forward and delayed pricing contracts were second and third, respectively. Most of the durum and barley were sold in the spot market while most of the hard red spring wheat and sunflower were sold in the to-arrive market.

Elevator managers may profit from a transit hedging program. A short hedge and subsequent spot sale is preferable to a to-arrive sale if the spot/future basis is expected to be larger than the initial to-arrive/futures basis. The to-arrive sale, however, is in the preferred alternative if this basis relationship is expected to be smaller.

Elevator managers have two options in disposing of NPE grain--storage or sale. Deciding on which alternative to choose depends on the service charge, interest rates, and changes in basis. The sell option is preferred if the

basis strengthens by less than interest income or weakens. The store option should be implemented if the basis is expected to strengthen by more than interest income.

Factors Affecting the Development of Large Country Elevators

Several factors may influence the development of large country elevators in North Dakota. Most firms constructing subterminal facilities are doing so in order to take advantage of reduced rail rates for multiple car shipments. Because of factors such as trade area size, production density, and competition, some firms may have difficulties in procuring and coordinating sufficient quantities of grain to fill multiple car loads. Use of alternative grain contracts such as delayed pricing and merger activity are two grain procurement methods being used by existing subterminal facilities.

While subterminal facilities may gain efficiencies in certain aspects of grain marketing, they may lose efficiencies in other aspects. Some of these inefficiencies include: 1) hauling against the market, 2) double handling of grain, and 3) underutilization of capacity.

Official point of origin grades present an opportunity for certain subterminal facilities to gain efficiencies relative to traditional country elevators. Facilities may increase blending opportunities and decrease carrying costs associated with shipment to final settlement time by utilizing official origin grades. Also, uncertainty as to price may be decreased somewhat since the official grade is known prior to shipment.

Conclusions

The development of large country elevators (subterminals) will conceivably impact the traditional country grain marketing system in North Dakota. Precise effects of a network of subterminals depends on the location and absolute number

of firms that enter the market. Ostensibly, if subterminals can operate at a lower cost than conventional country elevators, they may replace a disproportionate number of existing firms. Previous subterminal activity around the state has prompted mergers--particularly cooperative mergers. Management of many firms realized that their country facilities could not compete with new subterminals as independent operations and as a result chose to cooperate with other firms under a subterminal-satellite elevator system. The operational efficiency of these subterminal-satellite systems may be less than some single plant subterminals in certain instances. The concepts of "double handling of grain" and "hauling against the market" may be areas where efficiencies are lost. This loss in efficiency, theoretically, provides an incentive to competitors to enter the industry. Managers of subterminal-satellite elevators should thoroughly study the viability of their main plant operating as a single entity should economic conditions affect the performance of the subterminal-satellite system.

Considerable care should be taken by planners of potential subterminal elevator sites. The denisty of grain production and marketings in many areas of the state may not support "too many" or "too large" facilities. Planners should be particularly aware of the size of trade area required to maintain sufficient grain volume. Subterminals operating in the western part of the state, for example, may require substantially larger trade areas but smaller facilities than those operating in the eastern part.

Planners are also faced with problems regarding capitalization of facilities. Generally, current decisions are whether to capitalize 26-car or 52-car loading facilities. Present freight rates generally favor investment in elevators capable of shipping 52-car trainloads, but uncertainty as to an assured future rate level presents problems to those investing. Substantial overinvestment could result should the freight rate differential shift subsequent to facility investment.

Subterminal facilities will not only affect country elevators operating in North Dakota, but producers will also be impacted. Conceivably, farmers may be required to transport grain greater distances to first market destinations should subterminals force some local facilities to leave the industry. Also, producers may be required to market their grain in a more scheduled fashion as subterminal managers increase planning and coordination in the loading of multiple car shipments. New grain marketing alternatives, such as delayed pricing arrangements, may also be offered to producers. While these alternatives may not be exclusive to subterminal use, managers of these facilities may find these alternatives more adaptable to subterminal grain merchandising activities than traditional country elevators.

APPENDIX A

Mail Survey

NORTH DAKOTA GRAIN HANDLING AND MERCHANDISING STUDY
Confidential

1. What is the storage capacity of your elevator?

   Upright _____bushels

   flat _____bushels

2. What has been the average volume of grain handled by your elevator during the past three years?

   _____bushels

3. Please check the types of contracts used by your elevator in purchasing grain and estimate percentages of grain that apply to each contract (1980-81).

Type of Contract	Percent of Grain Contracted			
	HRS	DURUM	BARLEY	SUNFLOWER
___a. Cash transaction (either deferred or immediate payment)	___	___	___	___
___b. Forward contract (price now for later delivery)	___	___	___	___
___c. Deferred pricing (price later based on flat price)	___	___	___	___
___d. Deferred pricing (price later-basis established)	___	___	___	___
___e. Other (list) _____	___	___	___	___
___f. Other (list) _____	___	___	___	___

4. Please check the types of sale used by your elevator in selling grain and estimste percentages of grain that apply to each type (1980-81).

Type of Contract	Percent of Grain Contracted			
	HRS	DURUM	BARLEY	SUNFLOWER
___a. Spot market	___	___	___	___
___b. To-arrive	___	___	___	___
___c. Track Country Station (f.o.b.)	___	___	___	___
___d. Other (List)	___	___	___	___
___e. Other (List)	___	___	___	___

5. For each type of purchase contract listed in question 3 would you estimate the percent of grain hedged? For example, if 40 percent of your grain is purchased by no price established, please indicate how much of the 40 percent is hedged.

Type of Contract	Percent Hedged HRS	Percent Hedged SUNFLOWER
a. Cash transaction (either deferred or immediate payment)	_____	_____
b. Forward contract (price now for later delivery)	_____	_____
c. Deferred pricing (price later based on flat price)	_____	_____
d. Deferred pricing (price later--basis established)	_____	_____
e. Other (List) _____	_____	_____
f. Other (List) _____	_____	_____

6. For each type of sale listed in question 4 would you estimate the percent of grain hedged? For example, if 50 percent of your grain is shipped to-arrive, please indicate how much of the 50 percent is hedged.

Type of Sale	Percent Hedged HRS	Percent Hedged SUNFLOWER
a. Spot Market	_____	_____
b. To-arrive	_____	_____
c. Track country station (f.o.b.)	_____	_____
d. Other (List) _____	_____	_____
e. Other (List) _____	_____	_____

7. What percent of your grain was consigned for sale in:

1977_____%

1978_____%

1979_____%

1980_____%

1981_____%

Thank you very much for your time and cooperation in returning this questionnaire.

References

Benton, Alva H. and M. F. Peightal, Farmers Elevators in North Dakota, Bulletin 206, North Dakota Agricultural Experiment Station, North Dakota Agricultural College, Fargo, February 1927.

Burlington Northern Railroad Company, Freight Tariff BN4016, Supplement 1974, October 1981.

Casavant, Ken C., 1980 Country Elevator Survey, unpublished data.

Chase Craig A. and Delmer L. Helgeson, Cost Analysis of Potential North Dakota Subterminal Systems, Ag Econ Report No. 156 and UGPTI Report No. 44, Department of Agricultural Economics and Upper Great Plains Transportation Institute, North Dakota State University, Fargo, 1983.

Dooley, Frank J., Delayed Pricing Contracts: Application to North Dakota Grain Marketing, Transportation Law Paper, Upper Great Plains Transportation Institute, North Dakota State University, Fargo, September 1980.

Experience, Incorporated, A Study of the Shipping, Transport, and Port Needs for North Dakota's Grain and Oilseed Production, Minneapolis, Minnesota, June 1980.

Fedeler, Jerry A., Earl O. Heady, and Won W. Koo, An Interregional Analysis of the U.S. Domestic Grain Transportation, CARD Report 54T, Center for Agricultural and Rural Development, Iowa State University, Ames, February 1975.

Fisher, Neal H., Analysis of Grain Title Transfer Arrangements, unpublished M.S. Thesis, Department of Agricultural Economics, North Dakota State University, Fargo, 1976.

Grain Terminal Association, unpublished circulars, St. Paul, Minnesota.

Griffin, Gene C., North Dakota Grain and Oilseed Transportation Statistics 1980-81, UGPTI Report No. 42, Upper Great Plains Transportation Institute, North Dakota State University, Fargo, March 1982.

Hertsgaard, Thor, Optimum Organization of North Daktoa Grain Handling and Transportation Facilities, Department of Agricultural Economics and Upper Great Plains Transportation Institute, North Dakota State University, Fargo, forthcoming.

Hilger, Donald A., Bruce A. McCarl, and J. William Uhrig, "Facilities Location: The Case of Grain Subterminals," American Journal of Agricultural Economics, Volume 59, Number 4, November 1977, pp. 679-681.

Illinois Department of Agriculture, Rules and Regulations, Grain Dealers Act, Revised Statutes, Chapter III, Paragraph 301-311, Division of Agricultural Industry Regulation, Bureau of Warehouses, January 1, 1980.

Koo, Won W. and Linda Cox, Grain Distribution by Rail, Bulletin 707, Department of Agricultural Economics, Montana State University, Bozeman, February 1979.

Ming, Dennis R., 1979 Grain Reserve Survey, unpublished data.

Nelson, David C. and Kent J. Horne, An Analysis of the Assembling and Merchandising of Grain to Fit the Multiple-Car Train Concept in North Dakota, UGPTI Report No. 13, Upper Great Plains Transportation Institute, North Dakota State University, Fargo, November 1970.

North Dakota Crop and Livestock Reporting Service, North Dakota Agricultural Statistics, Ag Statistics No. 48, North Dakota State University, Agricultural Experiment Station and United States Department of Agriculture, Economics, and Statistics Service, cooperating, Fargo, May 1981.

North Dakota Grain Dealers Association, Directory of Licensed and Bonded Country Elevators in North Dakota, Fargo, 1981.

North Dakota Grain Dealers Association, Grainmens' Mirror, Vol. LVI, No. 12, Fargo, December 1981.

Sheperd, Geoffrey S., Gene A. Futrell, and J. Robert Strain, Marketing Farm Products, Iowa State University Press, Ames, 1976, pp. 184-185.

Turner, Mike., Richard Heifner, Everett Nichols, and Robert Wisner, Who Will Market Your Grain?, D-1057, Texas Agricultural Extension Service, Texas A&M University, College Station, March 1978.

United States Department of Agriculture, Statistical Reporting Service, Grain Stocks, January 1982.

Velde, Paul D., Fred R. Taylor, and Jerome W. Hammond, The Organization of Country Markets for Grain in North Dakota, Ag Econ Report No. 49, Department of Agricultural Economics, Agricultural Experiment Station, North Dakota State University, Fargo, July 1966.

Waltz, Duane J., Optimum Size and Location of Elevators, unpublished M.S. Thesis, Department of Agricultural Economics, North Dakota State University, Fargo, 1971.

Wilson, William W., A Statistical Analysis and Forecasting Model of the Minneapolis Spring Wheat Basis, Department of Agricultural Economics, North Dakota State University, Fargo, forthcoming.

Wilson, William W., Factors Affecting Post Harvest Changes in Grain Prices Received by North Dakota Producers, Ag Econ Report No. 146, Department of Agricultural Economics, North Dakota State University, Fargo, May 1981.

Wilson, William W., Hedging Effectiveness of U.S. Wheat Futures Markets, Ag Econ Report No. 165, Department of Agricultural Economics, North Dakota State University, Fargo, October 1982.