AgEcon SEARCH
RESEARCH IN AGRICULTURAL & APPLIED ECONOMICS

The World's Largest Open Access Agricultural & Applied Economics Digital Library

This document is discoverable and free to researchers across the globe due to the work of AgEcon Search.

Help ensure our sustainability.

Give to AgEcon Search

AgEcon Search
http://ageconsearch.umn.edu
aesearch@umn.edu

*Papers downloaded from **AgEcon Search** may be used for non-commercial purposes and personal study only. No other use, including posting to another Internet site, is permitted without permission from the copyright owner (not AgEcon Search), or as allowed under the provisions of Fair Use, U.S. Copyright Act, Title 17 U.S.C.*

Australian Journal of Agricultural Economics, Vol. 39, No. 1 (April 1995), pp 71-87

AN OPTIMAL CONTROL MODEL FOR INTEGRATED WEED MANAGEMENT UNDER HERBICIDE RESISTANCE*

RUSSELL J. GORDDARD, DAVID J. PANNELL and GREG HERTZLER
University of Western Australia, Nedlands WA 6907

The presence of weeds which have developed resistance to chemical herbicides is a problem of rapidly growing importance in Australian agriculture. We present an optimal control model of herbicide resistance development in ryegrass, the weed for which resistance is most commonly reported. The model is used to select the optimal combination of chemical and non-chemical control measures taking account of the trade off between short term profits and the long term level of herbicide resistance. Results indicate that given the threat of resistance there are benefits from integrating a combination of chemical and non-chemical control measures. The optimal strategy is found to include a declining herbicide dosage as resistance develops, with compensatory increases in the level of non-chemical control.

Resistance to chemical pesticides has long been a problem of insect and disease control. However, the first report of herbicide resistance in a weed population did not occur until 1970 (Ryan 1970). Resistance has now developed in at least 78 weed species to 14 herbicides while the rate of development of new herbicides has declined (LeBaron and McFarland 1990).

Several analyses of resistance to pesticides by insect pests and diseases have been published (Taylor and Headley 1975; Hueth and Regev 1974; Regev *et al.* 1983). However, weeds require specific attention for a number of reasons. First, the functional relationships of a realistic model for weed management are quite different than for insects and disease. For example, compared with other types of pest, weeds are different in their effect on crop yield, their mobility, their population dynamics and in the types of unintended side effects of their control.

Second, the range of options for their control is different, with a greater use of non-chemical means of control in many agricultural systems. Specific attention to weeds is justified by their economic significance.

* The authors thank Bruce Maxwell for access to his simulation model, Gurjeet Gill and Bob Martin for biological inputs to the study and Mike Clarke of Hoechst for the data used to estimate equations 3 and 4. Thanks also to John Kennedy and two referees who helped to improve the paper. We are grateful to the Australian Research Council and the Grains Research and Development Corporation for funding assistance.

© Copyright 1995 The Australian Agricultural Economics Society

Expenditure on control of weeds in the developed world far exceeds that for other pests.

Development of herbicide resistance is due to selection pressure favouring the few naturally-resistant individuals present. These resistant individuals arise by chance due to genetic variability of weeds within a population (Gressel and Segel 1982). Various management options exist for lowering the rate of development of resistance. All involve a reduction of selection pressure through lower levels of use of the herbicide in question. The options include: (a) substitution to non-chemical means of control, such as cultivation or grazing, (b) reductions in the herbicide dosage, and (c) rotation between alternative herbicides, resulting in reduced levels of any one herbicide.

In this paper we present a dynamic optimisation model for weed control under threat of herbicide resistance. The model is used to integrate decisions about optimal chemical dosage and optimal levels of non-chemical control. We identify an economic balance between current control of herbicide-susceptible weeds and future development of resistance. Our aim is to understand this economic trade-off and its implications for weed management. Apart from the focus on weeds, the study differs from previous studies of the economics of resistance in its inclusion of non-chemical control. This inclusion of non-chemical control is shown to have a major impact on the optimal strategy for herbicide use and on the extent to which resistance can profitably be delayed.

We apply the model to a case study of resistance to diclofop methyl (a selective herbicide applied after crop emergence) by the grass weed annual ryegrass (*Lolium rigidum*) in wheat crops of Western Australia. This case study was selected because it accounts for the majority of reports of herbicide resistance in Australia (Powles and Holtum 1990). The study region has a Mediterranean climate with the major farm enterprises being cereals, lupins (a legume crop) and pasture (used for grazing by sheep). Most farms are owner-operated. Average farm size in the region is 2500 ha.

The paper proceeds as follows. We first present an outline of our model and its implementation for the case study. Then we present and discuss results from a range of model solutions selected to illustrate important principles of the integrated management of weeds subject to herbicide resistance.

The Model

We focus on two of the management options for delaying resistance: (a) inclusion of non-chemical weed control and/or (b) reducing the dosages of herbicide applied. We have not addressed two other management options which have been suggested:

(a) Rotation between different herbicides in successive crops. There is, as yet, no published information regarding the impact of this strategy on the rate of resistance development by ryegrass. However, we have reason to believe that excluding this option is unlikely to invalidate our results. Ryegrass has displayed a remarkable capacity to develop 'cross resis-

tance': the ability to resist two or more chemically distinct herbicides, including types which have not previously been applied to the weed population. Given this capacity, the benefits of rotating herbicides may be short or even non-existent for ryegrass.

(b) Rotation between years of crop and pasture to increase the available range of non-chemical control methods (e.g. grazing of weeds at times of seed production is possible in a pasture but not in a crop). Inclusion of this option would have added substantially to the difficulty of solving our model. Even without crop:pasture rotation options, our analysis is relevant to a substantial number of farmers. For many farmers in Western Australia, switching use of particular soil types from continuous cropping to crop:pasture rotations would result in substantial profit reductions. The preference (and stated intention) of many farmers is to continue with cropping for as long as possible, which is the approach adopted in this analysis.

The model was solved as a dynamic optimal control model, so it is constructed with state variables, which carry information about the system across years, and annual control or decision variables, which are chosen to achieve the objective, in this case to maximise the net present value of present and future farm profits. The optimisation model was solved using Gino (Liebman *et al.* 1986).

Figure 1 gives an overview of the structure of a year of the model, the components of which are described below. Letters in the following sections headers refer to relationships indicated in the figure.

Two state variables, the density of resistant seeds (S_r) and the density of susceptible seeds (S_s) at the beginning of each growing season are used to carry information about the build up of weed numbers and resistance over time. In the first year the density of susceptible weed seeds is set to S_s = 100 seeds m^{-2}, while resistant weed seed density is set to $S_r = S_s \times 10^{-6}$, the order of magnitude suggested by Gressel and Segel (1990) for an untreated population. In subsequent years the levels of these state variables are determined by the chosen level of weed control via the weed biology model.

Weed Growth and Control (a and b)

Symbols used in the following presentation of the model are listed in Table 1. S_{st} and S_{rt} represent the density of weed seeds present in January, which is immediately after harvest of the previous year's crop. Of these seeds, a proportion M_a die naturally over summer. Of the survivors, a proportion G will germinate in May (at the start of the growing season) and $(1 - G)$ will remain dormant in the soil, contributing to the seed bank in the following year. Those which germinate may be killed by non-chemical control (M_n), which is assumed to occur before seeding of the crop. A selective herbicide may be applied after the crop is sown causing proportional mortality M_c for susceptible weeds (but not affecting resistant weeds). Due to spatial variability of the herbicide dose applied, a proportion of weeds E will escape spraying (Dorr and Pannell 1992).

FIGURE 1
The Weed Management System

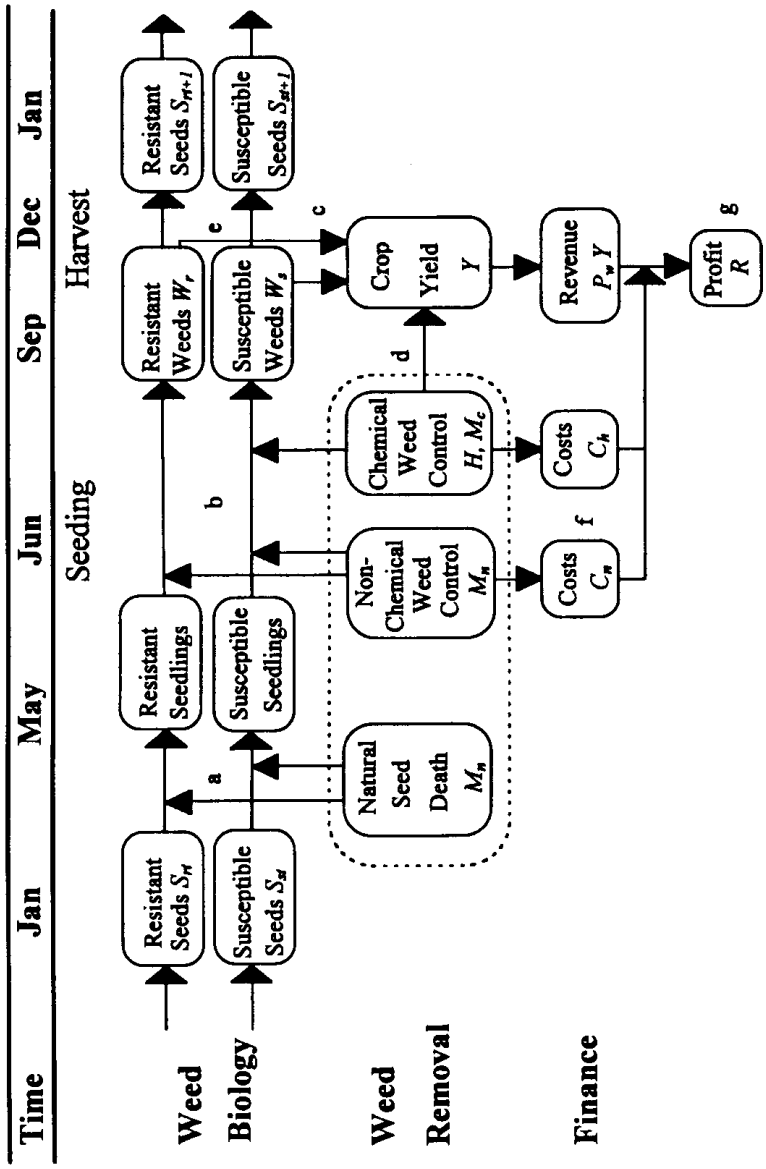

Therefore densities of resistant and susceptible weeds which survive to maturity (W_r and W_s respectively) are given by

(1) $$W_r = S_r G\,(1 - M_a)\,(1 - M_n) \quad \text{and}$$

(2) $$W_s = S_s G\,(1 - M_a)\,(1 - M_n)\,[E + (1 - E)\,(1 - M_c)]$$

TABLE 1
Symbols Used for Variables

Symbol	Meaning	Unit
C_f	Fixed costs	\$ ha^{-1}
C_h	Cost of herbicide	\$ ha^{-1}
C_n	Cost of non-chemical control	\$ ha^{-1}
E	Proportion of weeds which escapes spraying	proportion
G	Proportion of weed seeds which germinates	proportion
H	Herbicide dose	kg a.i. ha^{-1}
M_a	Autonomous (natural) weed mortality	proportion
M_c	Weed mortality from chemical control	proportion
M_n	Weed mortality from non-chemical control	proportion
N_m	Maximum seed production per weed	seeds m^{-2}
N_s	Seed production by susceptible weeds	seeds m^{-2}
n	Number of years of cropping	years
P_h	Cost of herbicide	\$ kg^{-1}
P_w	Sale price of wheat	\$ tonne^{-1}
S_r	Density of resistant seeds	seeds m^{-2}
S_s	Density of susceptible seeds	seeds m^{-2}
W_r	Density of resistant weeds	weeds m^{-2}
W_s	Density of susceptible weeds	weeds m^{-2}
W	Total density of weeds ($W_r + W_s$)	weeds m^{-2}
Y	Crop yield	tonnes/ha
Y_0	Weed-free crop yield	tonnes/ha
Z	Phytotoxic damage to crop by herbicide	proportion
λ	Parameter of equation 3 (chemical mortality)	
α, β	Parameters of equation 4 (crop yield)	
γ	Parameter of equation 5 (phytotoxicity)	
τ, ϕ ψ	Parameters of equation 6 (seed production)	

Mortalities are measured as proportions of weeds killed. Weed controls are conducted sequentially and therefore are multiplicative (rather than additive) in their impacts on weed numbers. M_c (mortality due to chemical control) is a function of the herbicide rate applied (H = kg of active ingredient/ha). This function was estimated using data from four trials conducted by Hoechst (manufacturers of Hoegrass®, the herbicide in question) in 1975/76. The data set is the same as that analysed by Pannell (1990b). The estimated relationship based on 96 observations was:

$$(3) \qquad M_c = 1 - \exp(\lambda H)$$

$$\lambda = -7.451$$

$$(SE = 0.3692)\ (R^2 = 0.78).$$

Non chemical control covers a wide range of options. The proportion of weeds killed by it is modelled directly (as M_n) rather than using a proxy such as number of cultivations. Non-chemical control is equally effective on resistant and susceptible weeds.

Mature Weed Sub-Model (c)

The total density of mature weeds ($W = W_s + W_r$) determines the competition suffered by the crop when producing grain. The crop yield function was estimated from 339 observations from 14 field experiments conducted in Australia by Hoechst between 1975 to 1981. Again the data set is the same as that analysed by Pannell (1990b). Parameters were estimated by non-linear regression using the microcomputer package Shazam (White 1978). Heteroskedasticity was detected (p = 0.01) so a weighted estimation was performed using the approach described by Taylor and Burt (1984). The resulting equation was:

$$(4) \qquad Y = Y_o\left[1 - \frac{\alpha}{1 + \alpha/(\beta W)}\right]$$

$$\alpha = 0.7525 \qquad \beta = 0.002036$$

$$(SE = 0.1325) \quad (SE = 0.00029) \quad (R^2 = 0.86)$$

In (4), Y is crop yield in tonnes/ha and Y_o is weed-free yield which was assumed to be 1600 kg ha^{-1}.

Phytotoxic Damage (d)

Results from 14 field experiments in Western Australia from 1983 to 1988 were used to derive the equation for phytotoxic damage to wheat crops by the herbicide (Z).

$$(5) \qquad Z = \gamma H$$

$$\gamma = 0.1448$$

$$(SE = 0.0260)\ (R^2 = 0.36)$$

Weed Seed Production (e)

Seed production is a function of the number of seed-producing weeds and the number of seeds per plant, which will depend on competition and therefore plant density. The model used here was developed by Firbank and Watkinson (1985) and adapted for resistance modelling by Maxwell *et al.* (1990).

$$(6) \qquad N_s = W_s N_m [1 + \tau (W_s + W_r + \psi)]^{\phi}$$

where N_s is the total seed production by susceptible ryegrass (m^{-2}), N_m is the maximum number of seeds produced per plant in the absence of competition and τ is the area of land required per plant to reach N_m. The term in square brackets indicates the amount of competition each weed plant faces due to the density of its own kind and crop plants (ψ) weighted according to their competitiveness relative to ryegrass. The parameter ϕ determines the effect of this competition on seed production.

The same model is used for resistant seed production. We assume there is no fitness disadvantage associated with resistant genes, which is consistent with evidence from the field. The state variables for next year (S_{st+1} and S_{rt+1}) are equal to the carry-over of ungerminated seeds plus seed production in the current year.

Estimation of parameters for the seed production and mortality models was extremely difficult. While there have been numerous studies of competition between ryegrass and wheat, none have been designed and measured to allow estimation of all of the parameters of this seed production model. The great variability of ryegrass biology across soil types, seasons and regions is reflected in the variability of the parameters that have been measured. For example, reported estimates of natural seed decay over summer range from 0 to 50 percent depending, largely, on the amount of summer rain. Estimates of the proportion of seeds that remain dormant all season and germinate the following year vary from 1 to 20 percent (Howat 1987). The variation appears to be due to differences in climate and cultivation practices (Gramshaw 1972). Our response to this problem was to rely on subjective estimates of weed scientists at the Western Australian Department of Agriculture. The estimates are intended to reflect conditions in a typical year in the study region. These estimates were consistent with observed values, but more importantly produced biological models that behaved in a similar way to ryegrass populations observed in the field. In cases where the scientists were unable to estimate parameters, the parameters were calibrated so that modelled densities declined in the same way as real populations when sprayed with chemicals, increased at the same rate when uncontrolled, and achieved steady state densities consistent with real populations subjected to constant management.

Parameters used were: $\tau = 0.4$ m^{-2}; $\phi = -0.7$; $M_a = 0.4$; $N_m = 800$ seeds per plant; $E = 0.01$; $G = 0.95$. Carry over of weed seeds to the next year $= 0.05\ (S_r + S_s)$. Crop density is set at 100 plants m^{-2}. To calculate ψ, one

wheat plant was assumed to have the same competitive effect on weed seed production as five competing ryegrass plants (Dr G.S. Gill, personal communication).

Costs of Cropping (f)

These can be divided into fixed and variable costs. In this model only the cost of the decision variables, herbicide rate and non-chemical control proportion, were considered variable. Other cropping costs such as those of fertiliser, seeding and harvesting were considered fixed at $89/ha. The choice of this value was based on data in a current version of the MIDAS whole-farm linear programming model (Kingwell and Pannell 1987; Pannell and Bathgate 1991) relevant to the study region.

There are two components to the cost of herbicide application: (a) an application cost which is independent of the dosage used and (b) the cost of the chemical. To facilitate solution of the model by non-linear programming, the application cost was considered to be a fixed cost (i.e. one which would be incurred even if no herbicide were applied). This assumption is justified by empirical observation and model results which indicate that normal weed densities are above the 'threshold' level for application. Therefore in this study, the cost function for herbicide is:

$$C_h = P_h H \tag{7}$$

where P_h is cost per kg of active ingredient ($55/kg), H is herbicide dose (kg ha^{-1}) and C_h is cost per hectare.

The cost of non-chemical control is far more difficult to estimate. There is a wide range of possible controls, including seed collection at harvest, mechanical cultivation, burning of crop residues, grazing and any combination of these. There is currently little quantitative evidence about the effectiveness of these measures. The costs of these controls include increased risk of soil erosion, loss of soil structure and organic matter and possibly decreased potential crop yield as well as capital and labour costs. These complexities and data deficiencies mean it is not currently possible to accurately estimate a non-chemical control cost function. The following functional form was used.

$$C_n = \mu M_n / (1 - M_n) \tag{8}$$

This function reflects increasing marginal control costs with increasing levels of control. The parameter μ determines the cost for a given level of control and is equal to the cost of 50 percent control. This was set at μ = $15 to reflect the approximate cost of a mechanical cultivation.

Profit and Net Present Value (g)

Net revenue from cropping a hectare (R_c) is given by

$$R_c = P_w Y - C_n - C_h - C_f \tag{9}$$

where P_w is wheat sale price and C_f is fixed costs. The price of wheat was assumed to be \$131/tonne at the farm gate. The farmer's decision problem is to choose herbicide dose each year (H_t), level of non-chemical control each year (M_{nt}) and the number of years to continue cropping (n) in order to maximise the sum of discounted future profits. We model a thirty year time frame, which was long enough for resistance to develop and cropping to become unprofitable under all management strategies considered.

As indicated above, the number of years of cropping is endogenous to the model. Cropping is ceased once weed numbers increase to a level at which cropping is less profitable than pasture. The farmer is then assumed to switch from cropping to continuous pasture. The gross margin of pasture was estimated to be \$24/ha based on results from the MIDAS model (Pannell and Bathgate 1991).

In summary, the farmer's weed control problem can then be written as

$$\underset{H_t M_{nt} n}{MAX} \quad \sum_{t=0}^{T} \Big(\zeta \, (P_w Y_t - C_{nt} - C_{ht} - C_f) + (1 - \zeta) \, R_p \Big) / (1 + r)^t$$

such that

$$S_{st+1} = F_s(H_t, M_{nt}, S_{st}, S_{rt})$$

$$S_{rt+1} = F_r(H_t, M_{nt}, S_{st}, S_{rt})$$

ζ takes the value 1 if $t \leq n$ or zero if t > n. R_p is the gross margin of pasture. F_s and F_r represent the weed model described above in equations 1, 2, 3 and 6. Other assumed parameter values include: S_{s0} = 100 seeds m^{-2}, S_{r0}= 0.0001 seeds m^{-2}, discount rate r = 0.05, number of periods T = 30.

Simplifications and Limitations

While our model is detailed in its representation of the biology of weed competition, population dynamics and mortality, there are a number of areas in which simplifying assumptions have been made. The model is deterministic. We do not represent the year-to-year variation in herbicide performance, the spatial variation in herbicide dose or the impact of risk aversion of the optimal management strategy. However other published evidence indicates that the impacts of risk on optimal management strategies for ryegrass are small (e.g. Pannell 1990a; Dorr and Pannell 1992).

We assume that weeds other than ryegrass are well controlled. Reports of herbicide resistance in Australia have been predominantly due to ryegrass, with wild oats (*Avena* spp.) accounting for the only other commercially significant reports (Powles and Holtum 1990).

We assume that once the population of resistant weeds is so high that the farmer switches from cropping to pasture, there is no subsequent switch back to cropping within the time span of the model. In reality, after a suitable period of heavy grazing pressure and other measures to reduce

the number of weed seeds, it may be profitable to resume cropping with a reliance entirely on non-chemical weed control.[1] If this is true, our results tend to overstate the economic cost of resistance.

We do not attempt to model the complex genetics of resistance development. Rather we assume that there are two genetically independent populations of weeds sharing the paddock with the crop. Modelling results of Maxwell *et al.* (1990) indicate that more complex representations of the genetics make very little difference to the simulated rate of resistance development.

A final simplification is the exclusion of two potential management strategies from the analysis: rotation of crop with pasture (with prospects of reduced weed seed numbers through grazing and other means) and rotation between herbicides of different chemical types. We argued earlier that the model provides valuable information despite the exclusion of these options.

In attempting to estimate some parameters of the model, we identified deficiencies in the quality and/or quantity of available data. This is especially true for the seed bank dynamics component of the model (equations 1, 2 and 6).

Results and Discussion

Two sets of results are presented. In the first section we examine the optimal values for the three decision variables, H_t, M_{nt} and n. In the second section, the model is constrained to particular levels of non-chemical control ($M_{nt} = k$ for all $t \leq n$) and the value of this level of non-chemical control are calculated by comparison with an optimal solution subject to a constraint of $M_{nt} = 0$ for all t.

Optimal Values for Decision Variables

We compare results with and without the threat of resistance for each of two management strategies: chemical control only and chemical control in conjunction with non-chemical control. For these four scenarios Table 2 shows net present values (NPVs) calculated over 30 years using a 5 percent real discount rate. It also shows the optimal value of n, the number of years before cropping is abandoned in favour of pasture (due to build-up of herbicide resistance).

The presence of resistance at the rate of one plant per million in the first year substantially reduces the NPV: by \$594 or \$678 per hectare depending on whether non-chemical control is used. For this case study, the value of non-chemical control is dramatically affected by the presence of a resistance threat. If resistance is not a threat, including the option of non-chemical control in the weed management strategy does not improve

[1] There appears to be little prospect of reinstating the susceptibility of a population to a herbicide once it has developed resistance.

the NPV. However, in the 'with resistance' case, non-chemical control contributes $84 (approximately 10 percent) to the optimal NPV.

TABLE 2

Key Results for the Four Scenarios Considered

Scenario	NPV[A] ($/ha)	Years of Cropping[B]
Non-resistant, chemical-only control	1445	30
Non-resistant, non-chemical and chemical control	1445	30
Resistant, chemical-only control	767	7
Resistant, non-chemical and chemical control	851	12

[A] Net present value over 30 years using 5% real discount rate.
[B] Number of years before level of resistance reaches level where cropping is less profitable than pasture.

Now consider the strategy of reducing herbicide dose. This has been an issue of some debate and disagreement within the Australian weed science community, with some arguing that reducing herbicide dose will actually accelerate the onset of herbicide resistance, while others argue that it will result in no change or a slight reduction in the risk of resistance. The only available empirical evidence (based on results from hundreds of tests of weed seeds from Western Australian farms) is consistent with the latter view (Sadler 1993), so our model is formulated on this basis.

Figure 2 shows the optimal time path of herbicide use under each of the four scenarios. Focus initially on the two 'with resistance' scenarios. In both cases the herbicide dosage falls away rapidly in the last years of cropping as the level of resistance increases. There are three reasons for this fall:

(a) As the terminal year of cropping is approached, there is a decrease in one component of the marginal value of herbicide: its value in reducing weed numbers in subsequent years. Ryegrass has no detrimental effect in pasture, which is the optimal land use after resistance builds up to high levels.

(b) The presence of resistant weeds effectively decreases the weed-free yield from the point of view of susceptible weed control. Pannell (1990b) showed that a lower weed-free yield reduces the optimal herbicide dose.

(c) In one scenario, non-chemical weed control is progressively substituted for herbicide. In this case study, non-chemical control is more expensive than chemical control, so it is only selected when resistant weeds reach higher levels. However, non-chemical control is equally effective against

susceptible weeds, so when non-chemical control is increased, chemical control can be reduced.

FIGURE 2
Optimal Herbicide Dosages Over Time

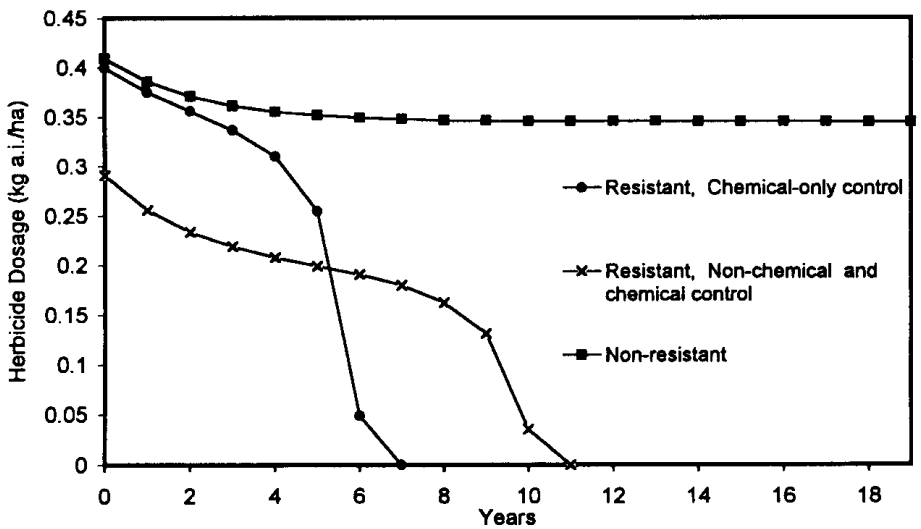

Importantly, note that the decline in herbicide rate over time is not due to an attempt to reduce selection pressure to delay build-up of resistance. By the time herbicide dose is reduced substantially, resistance has already reached levels at which domination by resistant weeds is imminent.

Lichtenberg and Zilberman (1986) noted that in some cases, farmers have been observed to increase their chemical usage as resistance to some pesticides increased. It had been shown that such a response is inconsistent with an economic analysis using common single equation production functions, such as the Cobb-Douglas function. Lichtenberg and Zilberman argued that the observed behaviour could be seen as rational if economists used correctly formulated models with separate functions for pest mortality and yield loss due to pests. Our model is formulated this way, yet we still get the Cobb-Douglas type of result.

A factor contributing to Lichtenberg and Zilberman's result is the way they characterised an increase in resistance. They assumed that it could be represented by a rightward shift of the weed mortality function, such that complete pest control could be achieved but at a higher pesticide dose. In this study, resistant weeds are completely resistant, unaffected by *any* level of herbicide. This is a more realistic assumption, at least for ryegrass (Howat 1987). Farmers in Australia have responded to herbicide resistance in various ways but not, to our knowledge, by increasing herbicide dose. We believe that such a response would not be economically optimal. It would create substantial medium-term costs by acceler-

ating the growth of herbicide resistance in the population (through increasing selection pressure) while generating only very small short-term benefits through reduced weed competition.

Note now the difference between the two 'with resistance' scenarios. The strategy which includes non-chemical control includes substantially lower herbicide dosages in early years and has a longer period of cropping before resistance dominates. Clearly, then, use of non-chemical control has the potential to extend the period of cropping. Without the inclusion of non-chemical control it is not optimal to reduce herbicide usage in the short term, even though failure to do so will ensure the rapid onset of herbicide resistance. This is shown by the small difference in initial herbicide dose between the two 'chemical only' strategies. The strategy which accounts for resistance development ('Resistant, Chemical-only control') has only a slightly lower herbicide rate until resistance builds up and the rate falls for the reasons outlined above. Another solution of the model (results not presented here) showed that if weed control was conducted according to the optimal strategy for the 'no resistance' scenario but resistance was actually present, cropping could profitably be conducted for seven years. That is, the reduction in chemical use when the threat of herbicide resistance is optimally allowed for is not sufficient to delay the onset of high resistance by even one year. The reason for this is the high cost of lower herbicide rates due to build up of susceptible weeds. If rates are lowered without a compensating increase in non-chemical control, the benefits of delaying resistance are more than offset by yield losses due to susceptible weeds in the short term.

The focus in previous papers addressing pesticide resistance has often been on reductions in the use of chemical pesticides without compensating increases in non-chemical means of control (e.g. Hueth and Regev 1974; Regev *et al.* 1983). In managing cases of herbicide resistance similar to this one, such a strategy would be sadly ineffectual. For this case study, the only efficient method of delaying resistance is to kill resistant weeds using non-chemical control.

The final result of note in Figure 2 is that both results with no threat of resistance have the same usage of herbicide. Even when non-chemical control is an option, it is not selected. In other solutions with lower costs for non-chemical control (results not presented here), it was sometimes used, but always at a substantially lower level than when resistance was present. Consequently its impact on the optimal level of chemical control was correspondingly lower.

Value of Non-Chemical Weed Control

The results given above indicate that non-chemical control is the key management tool for delaying resistance. However, as we noted earlier, the derivation of our cost function for non-chemical control was relatively subjective. The appropriate measure of cost would include short term financial costs as well as longer term costs of soil degradation. It is also likely that in response to the problem of herbicide resistance a range of

new weed control measures will be developed (e.g. Pandey and Medd 1990). For these reasons, in this section we examine non-chemical control in more detail.

FIGURE 3

Value of Non-chemical Control per Year of Crop

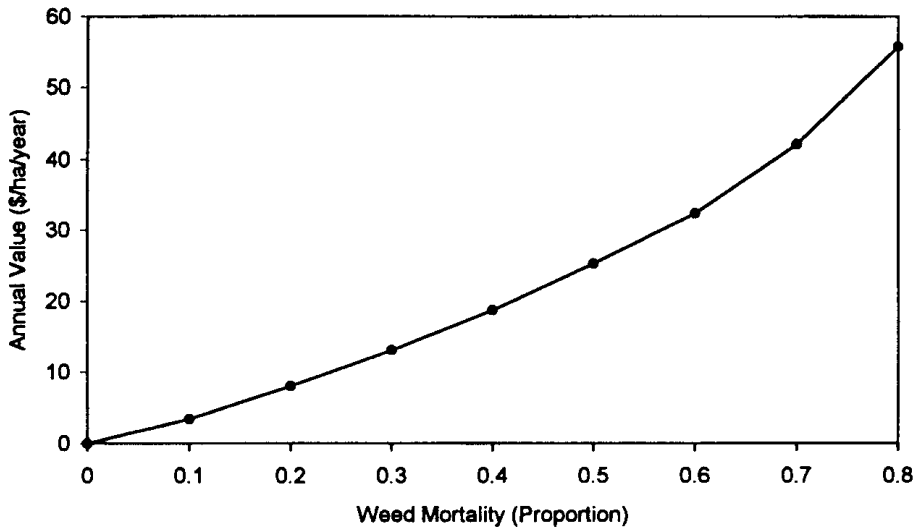

Consider the question of how much a farmer could afford to pay for non-chemical control given the threat of herbicide resistance. Figure 3 shows the break-even payment per year of crop for different levels of non-chemical control.[2] The annual value increases steadily to A$56 per hectare per year for 80% effective control. The model calculates that such a level of non-chemical control would allow cropping to be continued for 19 years.

The values of non-chemical control indicated in Figure 3 are high (up to 50 percent of the annual gross margin from the crop). Table 3 indicates the sensitivity of the value of 50 percent non-chemical control to changes in a range of parameters. These elasticities were calculated by varying the parameter and fitting a simple quadratic function to the resulting values.

[2] In this section we constrain the level of nonchemical control to be the same in each year of crop. We found that the optimal level varied little over time, so our constraint is not severe.

TABLE 3

Elasticity of Value of 50 Percent Non-Chemical Control With Respect to Selected Parameters

Parameter	Elasticity
Sale price of wheat (P_w)	1.96
Gross margin of pasture	–0.25
Cost of herbicide (P_h)	0.02
Autonomous weed mortality (M_a)	0.20
Maximum seed production per weed (N_m)	–0.21
Area required by weed to achieve N_m (τ)	0.16
Delayed carry over[A]	0.02
Maximum yield loss per weed (β)	–0.02

[A] Proportion of seed from year n which germinates in year n + 2.

With the exception of wheat price, the value of non-selective control is very insensitive to changes in the model parameters listed in Table 3. A one percent increase in wheat price would increase the value of non-chemical control by 1.96 percent, reflecting the higher value of extending the period of cropping as a result of using non-selective control. For similar reasons, the impact of weed-free crop yield is also high (not shown in Table 3).

Increasing the gross margin of pasture reduces the value of non-selective control because the switch from cropping to less profitable pasture production (which is delayed by non-selective control) is less costly. One reason why the elasticity is only -0.25 is that changing the gross margin of pasture affects only some of the years and furthermore these are at the end of the period, so being most affected by discounting.

Changing the cost of herbicide has almost no impact on the value of non-selective control. This indicates that the substitution of non-selective control for chemical control contributes only slightly to the benefits of non-selective control.

The other parameters with elasticities of 0.21 or less all relate to the population dynamics of weeds or their competition with the crop. The model indicates that M_a, N_m and τ are the biological parameters to which the value of non-selective control is most sensitive. Unfortunately the quality of information about these parameters is lower than for other, less critical parameters. Further biological research on these parameters may be warranted. Nevertheless the low elasticities for all these biological parameters indicate that despite difficulties encountered in obtaining data to estimate them, their precise values are not critical in determining the approximate value of non-selective control.

Concluding Comments

Weeds appear to be belatedly following insect pests and diseases in developing resistance to a wide range of chemical control agents. To date, the areas affected are small but they are growing rapidly and history suggests that herbicide resistance will become an issue of widespread major concern.

As occurred with other types of pests, resistance has prompted a resurgence of interest in non-chemical control methods and has highlighted the importance of integrating several control methods into the weed management system. In this study we have attempted to understand aspects of the resistance management problem. Results from our case study highlight the importance of non-chemical control for managing resistance and reveal that reductions in herbicide dosage are unlikely to be economically desirable unless accompanied by increases in non-chemical control. We also found, contrary to Lichtenberg and Zilberman (1986), that as the level of resistance increases, the optimal level of chemical control decreases.

References

Dorr, G. J. and Pannell, D. J. (1992), 'Economics of improved spatial distribution of herbicide for weed control in crops', *Crop Protection* 11(4), 385-91.

Firbank, L. G. and Watkinson, A. R. (1985), 'On the analysis of competition within two-species mixtures of plants', *Journal of Applied Ecology* 22, 503-17.

Gramshaw, D. (1972), 'Germination of annual ryegrass seeds (*Lolium rigidum* Gaud.) as influenced by temperature, light, storage environment, and age', *Australian Journal of Agricultural Research* 23, 779-87.

Gressel, J. and Segel, L. A. (1982), 'Interrelating factors controlling the rate of appearance of resistance: the outlook for the future', In H.M. LeBaron and J. Gressel (eds), *Herbicide Resistance in Plants*, Wiley, New York, pp. 325-47.

Gressel, J. and Segel, L. A. (1990), 'Herbicide rotations and mixtures: effective strategies to delay resistance', In M.B. Green, H.M. LeBaron and W.K. Moberg (eds), *Managing Resistance to Agrochemicals, From Fundamental Research to Practical Strategies*, American Chemical Society, Washington, D.C., pp. 430-58.

Howat, P. D. (1987), 'Weeds resistant to herbicides in Australia and contributing factors leading to their appearance', *Plant Protection Quarterly* 2(2), 82-5.

Hueth, D. and Regev, U. (1974), 'Optimal agricultural pest management with increasing pest resistance', *American Journal of Agricultural Economics* 56(3), 543-52.

Kingwell, R. S. and Pannell, D. J. (eds) (1987), *MIDAS, A Bioeconomic Model of a Dryland Farm System*, Pudoc, Wageningen.

LeBaron, H. M. and McFarland, J. (1990), 'Herbicide resistance in weeds and crops: an overview and prognosis', In M.B. Green, H.M. LeBaron and W.K. Moberg (eds), *Managing Resistance to Agrochemicals, From Fundamental Research to Practical Strategies*, American Chemical Society, Washington, D.C., pp. 336-52.

Lichtenberg, E. and Zilberman, D. (1986), 'The econometrics of damage control: why specification matters', *American Journal of Agricultural Economics* 68(2), 261-73.

Liebman, J., Lasdon, L., Schrage, L., and Waren, A. (1986), *Modelling and Optimisation With Gino*, The Scientific Press, Palo Alto.

Maxwell, B. D., Roush, M. L. and Radosevich, S. R. (1990), 'Predicting the evolution and dynamics of herbicide resistance in weed populations', *Weed Technology* 4, 2-13.

Pandey, S. and Medd R. W. (1990), 'Integration of seed and plant kill tactics for controlling wild oats (*Avena* spp.): An economic evaluation', *Agricultural Systems* 34, 65-76.

Pannell, D. J. (1990a), 'Responses to risk in weed control decisions under expected profit maximisation', *Journal of Agricultural Economics* 41(3), 391-403.

Pannell, D. J. (1990b), 'An economic response model of herbicide application for weed control in crops', *Australian Journal of Agricultural Economics* 34(3), 223-41.

Pannell, D. J. and Bathgate, A. (1991), *MIDAS, Model of an Integrated Dryland Agricultural System, Manual and Documentation for the Eastern Wheatbelt Model Version EWM91-4*, Miscellaneous Publication 28/91, Department of Agriculture, Perth, Western Australian.

Powles, S. B. and Holtum, J. A. M. (1990), 'Herbicide resistant weeds in Australia', *Proceedings of the 9th Australian Weeds Conference, Adelaide, South Australia, August 6-10th, 1990*, pp. 185-93.

Regev, U., Shalit, H. and Gutierrez, A. P. (1983), 'On the optimal allocation of pesticides with increasing resistance: The case of alfalfa weevil', *Journal of Environmental Economics and Management* 10, 86-100.

Ryan, G. F. (1970), 'Resistance of common groundsel to simazine and atrazine', *Weed Science* 18, 614-6.

Sadler, R. (1993), The effect of herbicide dose on the rate of development of herbicide resistance in annual ryegrass (*Lolium rigidum* Gaud.), Undergraduate dissertation, School of Agriculture, University of Western Australia.

Taylor, C. R. and Burt, O. R. (1984), 'Near-optimal management strategies for controlling wild oats in spring wheat', *American Journal of Agricultural Economics* 66(1), 50-60.

Taylor, C. R. and Headley, J. C. (1975), 'Insecticide resistance and the evaluation of control strategies for an insect population', *Canadian Entomologist* 107(3), 37-42.

White, K. J. (1978), 'A general computer program for econometric methods-SHAZAM', *Econometrica* 46(1), 239-40.