UCD Department of Agricultural Economics

1992

Food -- Marketing 2120

[redacted]

WORKING PAPER SERIES

#21007

University of California, Davis
Department of Agricultural Economics

FOOD-MARKETING TECHNOLOGY AND CONTINGENCY-MARKET VALUATION

by
Garth J. Holloway and Anthony C. Zwart

Working Paper No. 92-07

Food-Marketing Technology and Contingency-Market Valuation

Garth J. Holloway and Anthony C. Zwart

Abstract

Marketing activities are introduced into a rational-expectations model of the food-marketing system. The extended model is used to evaluate the effects of alternative assumptions about technology in food-marketing on the distribution of the benefits derived from the provision of contingency markets in agriculture. These benefits are shown to depend crucially on the values of two parameters: the cost-share of farm inputs and the elasticity of substitution between farm and nonfarm inputs in the production of retail-food products. For a broad spectrum of technologies, consumers are likely to be the net beneficiaries and farmers the net losers from the provision of contingency markets.

Keywords: contingency-market valuation, benefit distribution, technology in food marketing.

Food-Marketing Technology and Contingency-Market Valuation

Several theoretical papers have focussed attention on the normative implications of the provision of futures and insurance markets for agricultural commodities (Feder *et al.*, Ahsan *et al.*, Turnovsky, Nelson and Loehman, Lapan *et al.*). Since the costless provision of these markets is potentially Pareto-improving (Newbery and Stiglitz, 1982) an important objective in applied work is the computation of the distribution of the benefits derived from these schemes. In an insightful article in this *Journal*, Myers identifies the major factors affecting the distribution of the benefits between the producers and the consumers of a food commodity. The main conclusions from Myers' study are that contingency markets in agriculture improve economic efficiency but there is no guarantee that consumers and producers both benefit. In particular, farm welfare may decline when demand for the food product is inelastic. This latter finding is a significant one that warrants closer scrutiny, especially since most food-product demands are price-inelastic (Huang).

Myers' framework depicts a representative farmer trading directly with a representative consumer. Although such two-agent models are common in the literature on risk and uncertainty, the structure of technology in the marketing industries is increasingly recognized as an important determinant of food-system equilibrium (e.g., Gardner, Wohlgenant, Hertel and Tsigas).[1] In light of this, a natural question is the robustness of Myers' results to assumptions about the values of particular parameters that characterize technology in food marketing. This paper investigates this issue by extending Myer's framework to explicitly account for the activities of food marketers. These activities are incorporated into the model through the addition of two equations that define a competitive equilibrium for the food-marketing industry. These equations serve as local approximations for a broad spectrum of technologies that may exist in the marketing system for a particular food item. They are circumscribed by the domains of two parameters; namely, $\tau \in (-\infty,0]$ and $\omega \in [0,1]$. These denote, respectively, the elasticity of substitution between farm and non-farm inputs in the production of the food product and the cost share of farm inputs in marketing. They are assumed to be constant. Hence they lend themselves to closed-form analysis of the reduced-form solutions that define a rational-expectations equilibrium in the food-marketing system. In this way, the changes in equilibrium prices and quantities that occur as a result of the introduction of contingency markets can be related to the marketing-technology parameters τ and ω. In a revision of Myers' numerical results, the distribution of the benefits derived from the provision of contingency markets is shown to depend crucially on the values of these parameters and, hence, the technology in marketing to which they correspond.

Marketing-System Equilibrium in the Absence of Contingency Markets

For the purpose of comparisons with Myers' results we retain the basic structure of the original model. We modify it, however, in order to distinguish between the respective information sets conditioning the expectations of farmers, consumers, and food-marketers. An appealing way to do this is to consider the temporal sequence of decision-making in the absence of futures and insurance markets:[2] At time "t-1" farmers make quantity decisions about the level of resources to devote to the production of a particular commodity, the output and price of which are revealed at time "t". During this latter period, after the price and output are known, marketing agents make input decisions based on their desired levels of production of a retail-food product. The latter is consumed at time "t+1" and, hence, at time "t" marketers face random demand.[3]

In the farm sector we retain the assumptions of the original model.[4] Specifically, we assume that (a) farmers are identical; (b) technology exhibits multiplicative uncertainty; (c) production is homogeneous of degree $(1+\delta)/\delta$, where $\delta \in [0,+\infty)$; (d) preferences exhibit constant relative aversion to risk of degree $\alpha \in (0,+\infty)$; and (e) farm consumption is distributed log-normally and jointly with the price of the farm commodity and the random factor in farm production. Using lower-case letters to denote logarithms (i.e., $v \equiv \log_e(V)$), we define ${}_{t-j}v_{t+i}$ as the conditional expectation at time "t-j" of the random variable v, the value of which is realized in period "t+i". Applying this notation to the first-order condition of a representative firm, we make use of properties of the log-normal distribution (e.g., Johnson and Kotz, pp. 112-36) to derive a time-dependent version of Myers' farm-commodity supply function. This has the specific form:

$$y_{ft} = \delta[{}_{t-1}p_{ft} - h(\cdot) + {}_{t-1}\theta_t + {}_{t-1}\sigma_{1t} - \alpha\, {}_{t-1}\sigma_{2t}] + \theta_t, \tag{1}$$

where y_f and p_f denote, respectively, the logarithms of output and the price of the farm commodity, $h(\cdot)$ is the log of the price-dependent component of the farm-production cost function, θ is the random variable that affects farm output, and σ_1 and σ_2 are functions of conditional expectations terms.[5]

In the marketing sector we introduce the following assumptions: (a) agents are identical, (b) they minimize the cost of producing any given level of output, (c) technology is nonstochastic with constant returns-to-scale,[6] (d) preferences exhibit constant relative aversion to risk of degree $\mu \in (0,+\infty)$, and (e) marketing-agents' consumption is distributed log-normally and jointly with the price of the retail product. Combining these assumptions with the first-order condition of a representative agent's maximization problem and applying Shephard's lemma, we obtain a derived demand function for the farm commodity:

(2) $$y_{ft} = (1-\omega)\tau p_{ft} + (\omega-1)\tau p_{mt} + y_{rt},$$

and an implicit supply function for the retail product:

(3) $$_t p_{rt+1} = \omega p_{ft} + (1-\omega)p_{mt} + {}_t\sigma_{3t+1}.$$

In these expressions y_r and p_r denote the logarithms of output and price of the retail product, p_m is the log of the price of nonfarm inputs used in retail-food production, σ_3 corresponds to a function of conditional expectations terms,[7] and τ and ω have been defined previously. The cost function implicit in the right-hand side of (3) has the generalized Cobb-Douglas form. There exists an exact correspondence between this specification and the derived demand function on the right-hand side of (2) only in the specific case where $\tau = -1$. Since this assumption is problematic for modelling food-marketing behavior, we use the more general specification implicit in (2), noting its local consistency with the specification in (3) when the variables in both equations are expressed in proportional-change terms.[8]

Consumer behavior is represented by a retail-demand function for the food product. We invoke Myers' specification:

(4) $$p_{rt+1} = a_0 + a_1 z_{t+1} + \xi^{-1} y_{rt+1},$$

where z denotes a vector of random effects that are assumed to be jointly log-normally distributed; a_0 and a_1 are fixed parameters; and ξ, which is also assumed to be constant throughout the range of the comparative-static experiments, denotes the elasticity of demand for the retail product.

Equations (1)-(4), implicitly define a rational-expectations equilibrium in the food-marketing system when there are no contingency markets available. We characterize this equilibrium through a set of reduced-form expressions for the prices and quantities of the farm commodity and the retail product, namely: p_f^*, y_f^*, p_r^*, and y_r^*.[9] The method of solution is analogous to that of Myers. Our temporal formulation requires, in addition, that we apply the law of iterated expectations, namely that for integers $k \le j \le i$, one has: $_{t-i}(_{t-j}v_{t-k}) = {}_{t-i}v_{t-k}$.

The Comparative-Static Effects of the Provision of Ideal Contingency Markets

Consider marketing-system equilibrium in the presence of two additional markets: one that is state-contingent in the output of the farm commodity—an insurance market—and another that is state contingent in its price—a futures

market. Myers shows that when these markets are "ideal" in the sense that (a) the futures price equals the expectation of the future spot price for the farm commodity, and (b) insurance premiums are actuarially fair so that they equal the expected payout from the scheme, risk averse farmers fully insure their output on the insurance market and fully hedge their insured output on the futures market. This behavior, which is shown to be consistent with expected profit maximization, yields an alternative specification of the farm commodity supply function:

$$y_{ft} = \delta[{}_{t-1}p_{ft} - h(\cdot) + {}_{t-1}\theta_t + {}_{t-1}\sigma_{1t}] + \theta_t. \tag{1'}$$

The difference between this specification and the one that appears as equation (1) is the absence of the term $-\alpha_{t-1}\sigma_{2t}$. As noted by Myers, this term is a function of fixed parameters and is nonpositive. Hence, the net effect of granting farmers access to contingency markets is a shift downwards in their supply function by a magnitude given by the value of the expression $\delta^{-1}\alpha_{t-1}\sigma_{2t}$. One expects, therefore, that equilibrium prices will be lower and equilibrium quantities will be higher in the contingency-markets regime. Of course, this logic is reasonable only if equations (2)-(4) remain unaffected by the introduction of the new markets. Indeed, we invoke this case by assuming that consumers and marketers do not trade on risk markets. We note, however, that when marketing agents trade on the futures market, both the derived demand for the farm commodity—equation (2)—and the implicit supply function for the retail product—equation (3)—will change in a manner that leads to ambiguous effects on output.[10]

The system depicted by equations (1') and (2)-(4) implicitly defines a rational-expectations equilibrium when ideal contingency markets are available. As before, we characterize this equilibrium through a set of reduced-form expressions: p_f^o, y_f^o, p_r^o, and y_r^o. Interest lies in the differences of the moments of these random variables between the two regimes. Thus, define $\dot{v}$ as the logarithmic difference in the mean of V (i.e., $\dot{v} \equiv \log_e E\{V^o\} - \log_e E\{V^*\}$) and define $\dot{\sigma}_v^2$ as the logarithmic difference in the variance (i.e., $\dot{\sigma}_v^2 \equiv \log_e Var\{V^o\} - \log_e Var\{V^*\}$). Using properties of the log-normal distribution, we derive the following expressions for the changes in these moments between the two regimes:

$$\dot{p}_f = \Phi = \frac{1}{2}\dot{\sigma}_{p_f}^2, \tag{5}$$

$$\dot{y}_f = \Phi\xi = \frac{1}{2}\dot{\sigma}_{y_f}^2, \tag{6}$$

$$\dot{p}_r = \Phi\omega = \frac{1}{2}\dot{\sigma}_{p_r}^2, \tag{7}$$

$$\dot{y}_r = \Phi\omega\xi = \frac{1}{2}\dot{\sigma}_{y_r}^2. \tag{8}$$

In the above expressions the symbol Φ,

$$\Phi \equiv \alpha\delta(\varepsilon-\delta)^{-1}{}_{t-1}\sigma_{2t}, \tag{9}$$

defines a common, comparative-static effect. It is the marketing-system analog of the common term that appears in Myers' original comparative-static expressions (equations (14) and (15), p. 259). The difference between the two representations is the presence of the parameter ε in place of the retail demand elasticity, ξ. The epsilon term,

$$\varepsilon \equiv \omega\xi + (1-\omega)\tau, \tag{10}$$

defines the magnitude of the reduced-form, derived demand elasticity facing the farm sector. It is a weighted average of the elasticities of retail-demand and input-substitution in marketing, where the weights are given by the cost shares of farm and nonfarm inputs. Hence, ε defines a linear combination of a *substitution effect*, $(1-\omega)\tau$, and an *expansion effect*, $\omega\xi$, each of which is nonpositive. Given the signs of the remaining parameters, it follows that Φ is nonpositive. Thus the means and variances of prices are *lower* and the means and variance of quantities are ***higher*** in the contingency-markets regime. While these results merely generalize the findings of Myers', equations (5)-(10) enable us to ascertain the robustness of the latter to assumptions about technology in the marketing industries. Setting $\omega = 1$ in (5)-(10), we observe that Myers' model is consistent with a situation in which farm-commodity costs completely exhaust expenditures by food marketers. In this case, the changes in the moments of prices and quantities are the same at both the farm and retail levels, and we may appropriately revert to Myer's representation. This is restrictive, however, because several of the major food industries depart substantially from this specific condition.[11] When these departures occur, both the cost share parameter, ω, and the elasticity of substitution, τ, influence the magnitudes of price and quantity adjustments and, hence, the distribution of the benefits derived from the provision of contingency markets in agriculture. The remainder of this paper is devoted to deriving these effects.

Welfare Computation

In the context of equations (5)-(8) a direct application of the results in Myers' appendix yields the following expression for the proportional change in consumer welfare that occurs with the introduction of contingency markets:

$$\begin{aligned} m^c &= -s\dot{p}_r - \frac{1}{2}\,[s\xi + s^2(R-\eta)]\,CV(P_r)^2\,\dot{\sigma}_{p_r}{}^2 \\ &= \omega\Phi\,[-s - [s\xi + s^2(R-\eta)]\,CV(P_r)^2]\,, \end{aligned} \tag{11}$$

where s is the share of the representative consumer's income that is spent on the food item, R is her coefficient of relative risk aversion, η is her income-elasticity of demand, and $CV(P_r)$ is the coefficient of variation in the retail price in the absence of contingency markets. Since τ and ω both affect the value of Φ, it is clear from the above expression that both the cost-share parameter and the substitution elasticity affect consumer benefits. Although the actual sign of these benefits is ambiguous, its magnitude is monotonic in the value of the multiplicative term $\omega\Phi$.

To calculate the effect on farm welfare, Myers uses an approximation whereby the impact of cost changes on consumption expenditures in farming are ignored. This procedure is rationalized on the grounds that these effects are likely to be small relative to the impact of changes in farm revenues. However, in the very short run, with asset fixity in agriculture ($0 \leftarrow \delta$), these cost changes can be shown to be substantial; in particular cases, they may overwhelm the effects of changes in farm revenues. In the long run, with free entry and exit from farming ($\delta \rightarrow \infty^+$), the cost change must be approximately proportional to the change in output that occurs as a result of the movement to the new equilibrium. These issues warrant reformulation of the expression for the change in farm welfare. When changes in costs are accounted for, this reformulation yields:

$$(12) \qquad m^f = \dot{c}_f + \frac{1}{2}\alpha\, CV(C_f)^2$$

$$= \Phi\,[\beta(1+\varepsilon)-\kappa\varepsilon(1+\delta)/\delta] + \frac{1}{2}\alpha\, CV(C_f)^2 ,$$

where $\dot{c}_f$ denotes the proportional change in farm-consumption expenditures that results from the introduction of contingency markets, $CV(C_f)$ is the coefficient of variation in these expenditures in the absence of these markets, β is the ratio of farm revenues to farm-consumption expenditures, and κ is the ratio of farm costs to farm-consumption expenditures. The difference between the above expression and the one derived by Myers (equation (16), p. 260) is the presence of the term $-\Phi\kappa\varepsilon(1+\delta)/\delta$ in the expression for the proportional change in mean farm-consumption expenditures. Since Φ and ε are nonpositive and κ and δ are nonnegative it follows that farm welfare will be lower when the effect of cost changes are accounted for. Accounting for these effects leads to new conditions that are sufficient to ensure that farmers gain from trading on contingency markets. In particular, we note that whenever the cost-share parameter is nonnegligible, neither Myers' condition—an elastic demand for the food product—nor its multi-market counterpart—an elastic derived demand for the farm commodity—are sufficient to ensure that farmers gain.

An important effect that is unobservable in Myers' framework is the impact that contingency markets have

on the welfare of agents in the marketing sector. Using Taylor-series approximations (Newbery and Stiglitz, 1981, p.93), we derive the following expression for the proportional change in marketing-agent welfare:

$$(13) \qquad m^m = \dot{c}_m + \frac{1}{2}\mu\,\Delta CV(C_m)^2$$

$$= \omega\Phi(1+\varepsilon) + \frac{1}{2}\mu\,\Delta CV(C_m)^2 .$$

In this expression $\dot{c}_m$ denotes the proportional change in consumption expenditures in the marketing sector, and $\Delta CV(C_m)^2$ is a term that reflects the relative change in the variance in these expenditures between the two regimes.[12] Since the sign of this expression cannot be determined *a priori*, little can be said about the overall impact of this term on marketing-agent welfare. In contrast, the mean consumption effect is positive when retail demand is elastic and negative when demand is inelastic. Its exact magnitude depends on the specific values of the technology parameters that appear in the multiplicative term $\omega\Phi$.

In summary, both the cost share parameter and the substitution elasticity affect the distribution of welfare between each of the market participants, but the precise effects are ambiguous. In order to determine the likely directions and magnitudes of these effects we perform the numerical experiments discussed below.

Numerical Results

Table 1 presents the information used to implement the experiments. Most of the reported parameter values correspond to those used by Myers. However, the introduction of a marketing sector requires some additional assumptions and other modifications to be made.

First, in the interests of space, only the case of high risk is considered. Second, since the long-run situation is, arguably, the more relevant one for policy analysis, the experiments are conducted under the assumption of constant returns-to-scale in farming. Third, accounting for farm costs necessitates estimating the ratio of these costs to farm-consumption expenditures. If one assumes that receipts from off-farm income are negligible then the relationship $\kappa = \beta$-1 can be used to assign a value to κ. A fourth modification concerns the appropriate value to use for the coefficient of variation in retail price in computing the change in consumer welfare. In Myers' framework (ω = 1) the means and variances of the logarithms of farm and retail prices are identical. Hence, for current purposes, it is natural to consider the case where the coefficients of variation in farm and retail prices are the same.[13] A fifth matter concerns the appropriate values to assign to the parameter μ and the statistic $\Delta CV(C_m)^2$, which appear in the

expression for the marketing agent's welfare change. The latter statistic reflects the change in the variability in marketing profits that occurs between the two regimes. Since these profits are defined over farm and retail prices and the quantity at retail, it reflects the combined effects of the changes implied in equations (5), (7) and (8). Since price variability decreases, while output variability increases, it is reasonable to assume that the net effect of this term is negligible. We therefore ignore the effects of the second term on the right-hand side of equation (13) and focus only on the mean consumption effect.[14] Given the magnitude assumed for the retail-demand elasticity the sign of this remaining term is positive.

We summarize the results of the simulations in the three diagrams that appear in figure 1. These depict the welfare changes over the two-dimensional space defined by the domains of the marketing-technology parameters, namely $\omega \in [0,1]$ and $\tau \in [-1,0]$. The results confirm that the cost-share parameter is crucial in affecting the incidence of the benefits and that the elasticity of substitution also plays an important role. Specifically, the magnitudes of the benefits accruing to consumers and to marketers increases monotonically in the value of ω.[15] Although these specific relationships are determined independently of the value of τ, the substitution elasticity does have a significant impact on the benefits accruing to the farm sector. In farm production the impact of τ is felt indirectly, through changes in the value of the derived-demand elasticity.

Several other observations are available from the results presented in figure 1. The first is one that appears to be independent of assumptions made about technology in the marketing industries and confirms an important finding in Myer's previous work: Consumers are likely to be the net beneficiaries of the provision of contingency markets. Second, the direction of change in marketing-agent welfare is determined solely by the value of the elasticity of demand for the retail product. This result is, of course, a direct consequence of the assumption that the second term on the right-hand side of (13) is negligible. In cases where this assumption is inappropriate it seems unlikely that the impact of the second term would be sufficient to overwhelm the impact of the first. A third observation, which is perhaps the most significant one available from the figure, is that for a wide range of technologies in the marketing industry farm welfare declines as a result of the introduction of contingency markets. Under the assumed values for the parameters in table 1, the sufficient condition for farmers to gain is that the absolute value of the derived demand elasticity be greater than two. Hence, farmers are more likely to gain when derive-demand is highly elastic. This, in turn, depends on three effects: the magnitude of the demand elasticity at the retail level, the substitution possibilities available in production of the retail product, and the proportion of marketing costs attributed to purchases of the farm-commodity. When the absolute values of the latter two effects

are small it is unlikely that the sufficient condition for farm gains will be met—even when demand for the food product is elastic. Indeed, estimates of ε can be derived for several of the major food industries that suggest that the sufficient condition is not met, given the values of the other parameters in table 1.[16] Whether the farm sector actually does gain in these particular cases depends greatly on the degree of variability in farm-consumption expenditures that exists prior to the introduction of contingency markets. However, the results suggest that in either case the gains or losses that are incurred are likely to be small. Indeed, it appears that they are likely to be small in both absolute terms as well as in relation to the value of farm output.[17]

Concluding Comments

An important factor that is often neglected in analyses of food-marketing systems is the nature of technology in the marketing industries. The results of this study have extended those of Myers' wherein a restrictive assumption about these industries is implicit; namely, that farm commodity inputs account for total expenditures in food marketing. In relaxing this assumption it is shown that technology in the marketing industries is a significant factor affecting the distribution of the benefits derived from the provision of contingency markets in agriculture. However, the more general framework presented in this paper reveals that an important finding of Myers remains robust. Specifically, consumers are likely to be the net beneficiaries of the provision of contingency markets. In contrast, when the cost-share parameter departs from the value one an elastic demand for the food product is no longer sufficient to ensure that farmers gain from the provision of these markets. For a wide range of values for the cost-share parameter and the elasticity of substitution in marketing, farmers are likely to lose surplus as a result of the introduction of risk markets.

More generally, this paper has considered the issue of introducing marketing behavior into a rational-expectations model of the food system. It is shown that this can be achieved in a tractable manner through a simple, two-equation extension of Myers' framework. As such, the extended model presented in this paper suffers the same limitations of the former model, including the assumptions of multiplicative uncertainty and constant relative aversion to risk. It is open to conjecture whether relaxing these assumptions is sufficient to overturn the findings presented herein. Future research should investigate this issue.

Footnotes

The authors are, respectively, Assistant Professor, Department of Agricultural Economics, University of California, Davis and Professor of Marketing, Department of Economics and Marketing, Lincoln University, New Zealand.

[1]This is not surprising when one considers the size of the marketing industries in relation to that of the farm sector. For example, in 1988 the marketing bill for domestic U.S. food products amounted to approximately seventy-five percent of the total value of expenditures on these products (USDA).

[2]While this modification is not essential, a temporal view of transactions is preferred because it provides explicit account of the various uncertainties pertaining to each of the agents.

[3]We consider the random-demand case to be more realistic than its alternative, which can be handled with only slight modifications to the analysis.

[4] One should note that several of the assumptions that follow are necessitated only by the need to derive numerical results. Many of the theoretical results upon which the model is founded are derived under a more general set of maintained hypotheses. For more detail see Myers (1986).

[5]Specifically: ${}_{t-1}\sigma_{1t} \equiv \frac{1}{2}\,{}_{t-1}\{(p_{ft} - {}_{t-1}p_{ft})^2 + (\theta_t - {}_{t-1}\theta_t)^2 + 2(p_{ft} - {}_{t-1}p_{ft})(\theta_t - {}_{t-1}\theta_t)\}$, and ${}_{t-1}\sigma_{2t} \equiv {}_{t-1}\{(p_{ft} - {}_{t-1}p_{ft})(c_{ft} - {}_{t-1}c_{ft}) + (\theta_t - {}_{t-1}\theta_t)(c_{ft} - {}_{t-1}c_{ft})\}$, where c_f denotes the logarithm of farm-consumption expenditures.

[6]The constant-returns-to-scale assumption is made by convention (e.g., Gardner, Wohlgenant, Holloway). Marketing technologies that are homogeneous of degrees less than one can be easily incorporated into the model.

[7] Specifically, ${}_t\sigma_{3t+1} \equiv \frac{1}{2}\,{}_t\{2\mu(p_{rt+1} - {}_tp_{rt+1})(c_{mt} - {}_{t-1}c_{mt}) + (p_{rt+1} - {}_tp_{rt+1})^2\}$, where c_m denotes the logarithm of consumption expenditures in the marketing sector.

[8]An often-maintained hypothesis for the marketing industries is that substitution possibilities between farm and nonfarm inputs are negligible. While the presence or absence of substitution possibilities has been the subject of considerable debate (e.g., Alston and Scobie, Freebairn *et al.*) the available empirical evidence (Wohlgenant, table 3, p. 250) suggests that $\tau = -1$ is more likely to represent a lower bound.

[9]There are, in fact, five endogenous variables appearing in equations (1)-(4) because the retail-output variable appears with different time subscripts. Due to the assumption that production in the marketing sector is nonstochastic, there is another equation which is implicit but omitted, namely: $y_{rt} = y_{rt+1}$.

[10]In fact such trades are implicitly ruled out from this model because consumers and marketers are assumed to make resource decisions after the realization of θ.

[11] For example, Wohlgenant (table 3, p. 250) reports cost-share values for the following commodity groups: beef and veal, 0.65; pork, 0.55; poultry, 0.52; eggs, 0.62; dairy, 0.47; and fresh vegetables, 0.33.

[12] Specifically, this term is the change in the variance that results from the introduction of risk markets, divided by the square of mean consumption expenditures in the initial regime. Hence, it closely approximates the difference in the coefficients of variation when the means are similar between the two regimes.

[13] A reviewer offers the intuitive expectation that the coefficient of variation at retail would be less than that at farm. An interesting question is the condition under which this conjecture is correct. It holds true only in the case where there are no random shocks in retail demand. We establish this result from the reduced-form relationship between the logarithms of farm and retail prices; namely: $p_{rt+1}^* = a_1(z_{t+1} - {}_tz_{t+1}) + (1-\omega)p_{mt} + {}_t\sigma_{3t+1} + \omega p_{ft}^*$. Taking exponents, we obtain: $P_{rt+1}^* = \Psi P_{ft}^{*\omega}$, where $\Psi \equiv \exp\{a_1(z_{t+1} - {}_tz_{t+1}) + (1-\omega)p_{mt} + {}_t\sigma_{3t+1}\}$. The latter term is nonrandom in the case where demand is deterministic (viz., ${}_tz_{t+1} = z_{t+1}$). Assuming this to be the case, we obtain an expression for the coefficient of variation at retail by applying a Taylor-series expansion (Mood *et al.*, p. 181); namely: $CV(P_r) \approx [\Psi\omega E\{P_f\}^{\omega-1}Var\{P_f\}^{1/2}] \times [\Psi E\{P_f\}^{\omega} + (1/2)\omega(\omega-1)E\{P_f\}^{\omega-2}Var\{P_f\}]^{-1}$. Setting $\omega = 0$ yields $CV(P_r) \approx 0$, and setting $\omega = 1$ yields $CV(P_r) \approx CV(P_f)$. Some calculus confirms $\partial CV(P_r)/\partial\omega \geq 0$ and, consequently, when demand is nonstochastic $CV(P_r) \in [0, CV(P_f)]$. When demand is random, however, retail-price variability may be greater than that at farm, and this is actually confirmed from data on several of the major farm-commodity groups. From Wohlgenant's price data we obtain the following sample estimates of the ratio $CV(P_r)/CV(P_f)$: beef and veal, 1.15; pork, 1.10; poultry, 0.90; eggs, 0.88; dairy, 0.91; and fresh vegetables, 1.61.

[14] The potential significance of this effect will be further negated in the case where the marketing firm is not strongly risk averse. When the firm's stockholders have sufficiently diversified portfolios it is reasonable to assume that resources will be allocated in a risk-neutral manner. Although examples of the use of this assumption can be

found (e.g., Innes), risk aversion appears to be the preferred model in the agricultural-marketing literature (e.g., Buccola and French, Buccola, Brorsen *et al.*, Schroeter and Azzam).

[15] Additional simulations confirm that these results are robust to alternative assumptions about farmer aversion to risk, $\alpha \in \{0.5,1.5\}$, but that the marketer's welfare change *declines* monotonically when demand is inelastic, $\xi \in \{-0.2,-0.8\}$.

[16] Specifically, one can calculate from Wohlgenant (table 3, p. 250) approximate estimates of ε for each of the following commodity groups: beef and veal, -0.76; pork, -0.51; poultry, -0.43; eggs, -0.15; dairy, -0.61; and fresh vegetables, -0.43. These estimates are based on the assumption that ${}_t\sigma_{3t+1} = 0$; they therefore underestimate ε in cases in which ${}_t\sigma_{3t+1} > 0$, and overestimate ε when ${}_t\sigma_{3t+1} < 0$.

[17] This conclusion differs slightly from that of Innes and Rausser who have also considered the effects of ameliorating risks in agricultural commodity markets. They conclude: "Welfare gains from interventions that improve risk trading in agriculture are potentially large relative to measures of the value of agricultural output, but they are likely to be of limited importance to the economy as a whole."

References

Ahsan, S. M., A. A. G. Ali, and N. J. Kurian. "Toward a Theory of Agricultural Insurance." *Amer. J. Agr. Econ.* 64(August 1982):520-29.

Alston, J. M. and G. M. Scobie. "Distribution of Research Gains in Multistage Production Systems: Comment." *Amer. J. Agr. Econ.* 65(May 1983):353-56.

Brorsen, B. W., J. Chavas, W. R. Grant, and L. D. Schnake. "Marketing Margins and Price Uncertainty: The Case of the U.S. Wheat Market." *Amer. J. Agr. Econ.* 63(August 1985):353-56.

Buccola, S. T. "The Supply and Demand of Marketing Contracts Under Risk." *Amer. J. Agr. Econ.* 63(August 1981):503-09.

Buccola, S. M. and B C. French. "Long-Term Marketing Contracts: Intra-Firm Optima and Inter-Firm Agreement." *Amer. J. Agr. Econ.* 61(November 1979):648-56.

Feder, G., R. E. Just, and A. Schmitz. "Futures Markets and the Theory of the Firm Under Price Uncertainty." *Quart. J. Econ.* 94(March 1980):317-28.

Freebairn, J. W., J. S. Davis, and G. W. Edwards. "Distribution of Research Gains in Multistage Production Systems: Reply." *Amer. J. Agr. Econ.* 65(May 1983):357-59.

Gardner, B. L. "The Farm-Retail Price Spread in a Competitive Food Industry." *Amer. J. Agr. Econ.* 57(August 1975):399-409.

Hertel, T. H. and M. E. Tsigas. "Tax Policy and US Agriculture: A General Equilibrium Analysis." *Amer. J. Agr. Econ.* 70(May 1988):289-302.

Holloway, G. J. "The Farm-Retail Price Spread in an Imperfectly Competitive Food Industry." *Amer. J. Agr. Econ.* 73(November 1991):979-89.

Huang, K. S. *U.S. Demand for Food: A Complete System of Price and Income Effects.* Washington DC: U.S. Department of Agriculture Tech. Bull. No. 1714, 1985.

Innes, R. D. "Investment and Government Intervention in Credit Markets when there is Asymmetric Information." J. Pub. Econ. 46(December 1991):347-81.

Innes, R. D. and G. Rausser. "Incomplete Markets and Government Agricultural Policy." *Amer. J. Agr. Econ.* 71(November 1989):915-31.

Johnson, N. L. and S. Kotz. *Distributions in Statistics: Continuous Univariate Distributions, Vol 1.* Boston: Houghton Mifflin Co., 1970.

Lapan, H., S. D. Hanson, and G. Moschini. "Production, Hedging, and Speculative Decisions with Options and Futures Markets." *Amer. J. Agr. Econ.* 73(February 1991):66-74.

Mood, A. M., F. G. Graybill, and D. C. Boes. *Introduction to the Theory of Statistics.* New York: McGraw-Hill, third edition, 1974.

Myers, R. J. *Economic Efficiency Under Uncertainty and the Effects of Ideal Risk Markets in U.S. Agriculture.* PhD. Dissertation, Department of Agricultural and Applied Economics, University of Minnesota, 1986.

_____. "The Value of Ideal Contingency Markets in Agriculture." *Amer. J. Agr. Econ.* 70(May 1988):255-67.

Nelson, C. H. and E. T. Loehman. "Further Toward a Theory of Agricultural Insurance." *Amer. J. Agr. Econ.* 69(August 1987):523-31.

Newbery, D. M. G. and J. E. Stiglitz. *The Theory of Commodity Price Stabilization.* London: Oxford University Press, 1981.

_____. "The Choice of Techniques and the Optimality of Market Equilibrium with Rational Expectations." *J. Polit. Econ.* 90(April 1982):223-46.

Schroeter, J. and A. Azzam. "Marketing Margins, Market Power, and Price Uncertainty." *Amer. J. Agr. Econ.* 74(November 1991):990-99.

Turnovsky, S. J. "The Determination of Spot and Futures Prices with Storable Commodities." *Econometrica* 51(September 1983):1363-87.

United States Department of Agriculture. *Agricultural Statistics.* Washington, D.C.:Government Printing Office, 1989.

Wohlgenant, M. K. "Demand for Farm Output in a Complete System of Demand Equations." *Amer. J. Agr. Econ.* 71(May 1989):241-52.

Table 1. Parameter Definitions and Domains

Parameter	Description	Domain
α	farmers' coefficient of relative risk aversion	3.0
ξ	elasticity of retail demand	-1.2
δ	elasticity of farm-commodity supply	∞^+
β	ratio of farm revenue to consumption expenditures	2.0
κ	ratio of farm costs to consumption expenditures	1.0
s	food-consumption expenditure share	0.2
R	consumers' coefficient of relative risk aversion	1.5
ξ	income elasticity of food demand	0.4
$CV(C_f)$	coefficient of variation in farm consumption	0.16
$CV(P_r)$	coefficient of variation in retail price	0.12
$\Delta CV(C_m)^2$	change in coefficient of variation in marketers' consumption	0.00
ω	cost share of farm inputs in marketing	0.0 ___ 1.0
τ	elasticity of substitution in marketing	-1.0 ___ 0.0

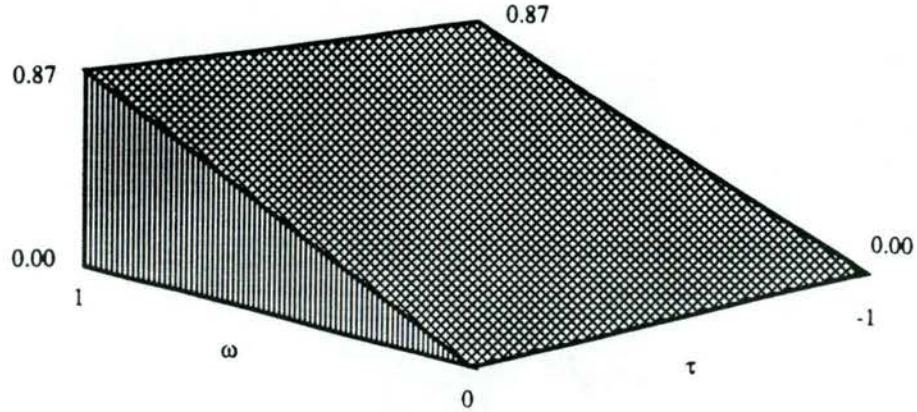

1a. Consumers

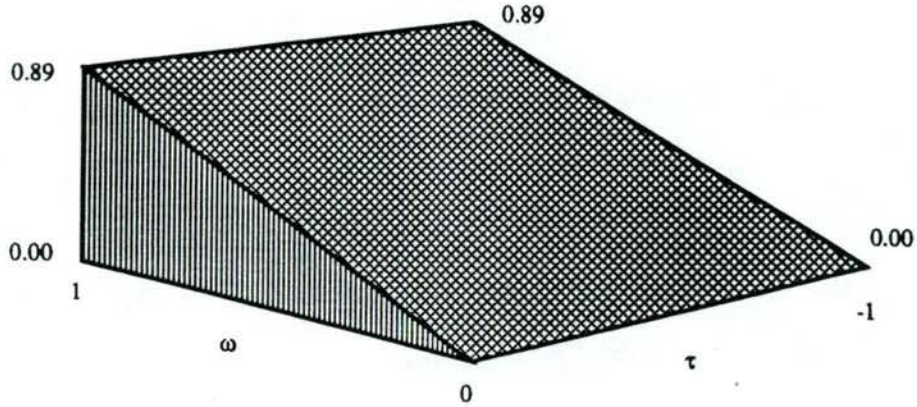

1b. Marketers

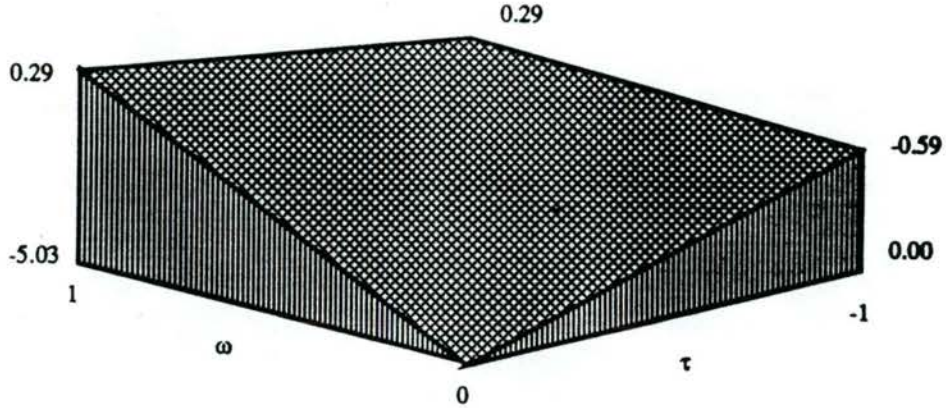

1c. Farmers

Figure 1. Percent Changes in Welfare