AgEcon SEARCH
RESEARCH IN AGRICULTURAL & APPLIED ECONOMICS

The World's Largest Open Access Agricultural & Applied Economics Digital Library

This document is discoverable and free to researchers across the globe due to the work of AgEcon Search.

Help ensure our sustainability.

Give to AgEcon Search

AgEcon Search
http://ageconsearch.umn.edu
aesearch@umn.edu

*Papers downloaded from **AgEcon Search** may be used for non-commercial purposes and personal study only. No other use, including posting to another Internet site, is permitted without permission from the copyright owner (not AgEcon Search), or as allowed under the provisions of Fair Use, U.S. Copyright Act, Title 17 U.S.C.*

Tax Increment Financing for Optimal Open Space Preservation: An Economic Inquiry

By

Yong Jiang
Dept. of Environmental and Natural Resource Economics
University of Rhode Island
Kingston Coastal Institute, 1 Greenhouse Road
Kingston, RI 02881
Email: yjia6796@postoffice.uri.edu

Stephen K. Swallow
Dept. of Environmental and Natural Resource Economics
University of Rhode Island
Kingston Coastal Institute, 1 Greenhouse Road
Kingston, RI 02881
Email: swallow@uri.edu

Selected Paper prepared for presentation at the American Agricultural Economics Association Annual Meeting, Long Beach, California, July 23-26, 2006

Copyright 2006 by Yong Jiang and Stephen K. Swallow. All rights reserved. Readers may make verbatim copies of this document for non-commercial purposes by any means, provided that this copyright notice appears on all such copies.

Tax Increment Financing for Optimal Open Space Preservation: An Economic Inquiry

Abstract The public has increasingly demonstrated a strong support for open space preservation. Questions left to local policy-makers are how local governments can finance preservation of open space in a politically desirable way, whether there exists an optimal level of open space that can maximize the net value of developable land in a community and that can also be financed politically desirably, and what is the effect of the spatial configuration of preserved open space when local residents perceive open space amenities differ spatially. Our economic model found the condition for the existence of an optimal level of open space is not very restrictive, the increased tax revenue generated by the capitalization of open space amenity into property value can fully cover the cost of preserving this optimal level of open space under a weak condition, and being evenly distributed and centrally located is very likely to characterize the optimal spatial configuration of preserved open space in terms of net social value and the capacity of tax increment financing.

Keywords: open space preservation, property value, tax increment, spatial configuration

I. Introduction

The public has been concerned with preserving open space from development in their neighborhood for decades. The Trust for Public Land finds that in both robust and challenging economic times since 1996, American voters have strongly supported conservation finance measures that preserve natural lands, create parks, and protect farmland, and more than 77 percent of the conservation finance ballot measures were approved, generating a total of $27 billion. The market, however, often fails to provide open space optimally, despite the substantial social value attached to open space, since the value of open space as a local public good doesn't, in most cases, fully accrue to the private land owner who provides them. In response, planners and local land managers have adopted many policy instruments to promote open space preservation (Bengston et. al. 2004, Porter 1997). One common approach extensively used across the U.S. is purchase of land designated as open space or rights to development (Myers and Puentes 2001, Porter 1997, Kelly 1993). An interesting question related to the purchase of open space land is how local government can balance their budget to cover the cost of the public investment in open space. If acquisition of open space land requires a tax increase, it may not be politically desirable although people strongly support preserving open space. According to a survey conducted by the National Association of Realtors (2001), 75% voters would like their local governments to buy land to create new open space in their communities, but most oppose increasing their property taxes by more than $50 a year to pay the cost of acquiring open space land.

Some studies have pointed out acquisition of open space land may be financed by the increment in tax revenue generated by property value appreciation in response to the

preservation of open space. For example, based on a hedonic study on single-family home sales in Portland, Oregon, Netusil et al. (2000) find open space could increase property value in high value neighborhoods and they further speculate that funding for the development and maintenance of open space may be generated simply by their preservation, that is, self-financing. An earlier illustration of the same proposition emerges from the construction of New York's Central Park. When the designer, Frederick Law Olmsted, was asked how the city could pay for the park, Frederick responded that the presence of the park would raise property values and the extra tax revenue generated would easily repay the construction costs. A subsequent empirical investigation on the relationship between the park and real estate value verified his point and was widely disseminated (see Fox 1990).

The idea that acquisition of open space may be financed by preservation seems promising since a large literature has demonstrated the positive effect of open space on local property value (see McConnell and Walls (2005) for a review). There also have been anecdotes showing that markets in certain circumstances can spontaneously provide open space from the same motivation. For example, in a study on market provision of open space, Heal (2001) presented two examples. The developer of Spring Island off the coast of South Carolina built only 500 high-value properties instead of constructing the 5,500 homes permitted, and conserved the balance of the land to raise the value of the homes sufficiently maximizing their profit. Similarly, hunters in Montana, concerned with the effect of summer home development, borrowed money to buy the land and finance the construction of a small number of luxury homes. The hunters placed a conservation easement on the remainder of the land, reserving the right to hunt on it

themselves, and sold the houses for more than the total cost of buying the land and building the houses. A recent issue of New York Times reports the St. Joe Company, Florida's largest private landowner holding 800,000 mostly inland acres in the scrubby, unremarkable pine forests of the Panhandle, is pushing "new ruralism" by low-density development and providing large amounts of open space in neighborhoods to attract city and suburban dwellers who are weary of civilization (Goodnough 2005).

All these examples suggest the possibility that open space can be paid for by its preservation. In fact, the public sectors of local governments have used tax increment from assessed property value to finance local economic development, especially in the 1980s and 1990s, when there were declines in subsidies from federal and state grants (Anderson 1990, Chapman 1998, Dye and Merriman 2006). A natural question is what is the condition that open space preservation can be self-financed. Does there exist a socially optimal amount of open space that can maximize the value of developable land in a community and that can also be self-financed? Studies have found the appreciated property (land) value induced by open space preservation exhibits a spatial pattern, which is related to the spatial characteristics of preserved open space, such as size, shape, and spatial location. How do these spatial factors of open space affect the possibility of using property tax increment to finance the acquisition of open space land? What is the optimal structure of open space that can be self-financed? In this study, we focus on economics of self-financed preservation of open space. More specifically, we develop a model to formally explore the possibility of using property tax increment to finance public investments in open space. We formulate our model within a context that local residents value and are willing to pay for open space in their neighborhood. Consequently, local

land managers may increase the value of community land and thus tax revenue by systematically investing in open space, and the fiscal gain by appreciated property value, in turn, will be used to cover these public investments.

This paper is organized as follows. Section 2 develops a model to help understand how open space can potentially raise local property value, which provides a theoretical basis for public investment in open space. More specifically, we identify the conditions under which the public investment in open space is socially optimal in terms of the maximized net value of developable land in communities. Section 3 introduces a budget constraint that the expenditure in open space preservation is fully covered by property tax increment due to amenity-induced property value appreciation, and examines the condition under which the socially efficient level of open space can be fully covered by increased tax revenue. Since property value may exhibit a spatial pattern depending on the spatial distribution of open space amenities for communities or neighborhoods of large scales, we examine the effect of spatial heterogeneity in open space amenities on the conditions for tax increment financing in Section 4. Section 5 uses simulation to explore the effect of spatial configurations of preserved open space. The policy-relevant formulation of the spatial aspects examined allows implications on the optimal structure of the socially efficient, self-financed level of preserved open space. We conclude this economic inquiry in Section 6.

II. Land Value and Optimal Open Space Preservation: A Theoretical Model

Consider residential communities or towns in a metropolitian area with varying average distance x to the central business district (CBD). These residential communities are

characterized by varying amounts of open space (public goods) *a*, which mimics the prototype of a series of local towns depicted in Tiebout's theory (1956) on local expenditures. Following the traditional monocentric urban model, each household chooses residential location (community) represented by *(x, a)*, house size *q* in units of land area in the selected residential community, and a numeraire good *z* to maximize their utility U = U(z, q, a). Each household is subject to a budget constraint z + Rq + tx = y, where *R* denotes land rent, *t* denotes transportation cost per unit distance, and *y* is household income.

For given land rent *R* and transportation cost *t*, the utility-maximizing choice of house size *q* and numeraire good *z* can be represented as $q^* = q(y, t, x, R, a)$ and $z^* = y - tx - Rq(y, t, x, R, a)$, respectively. Substitute the optimal consumption bundle (z^*, q^*) into the utility function, U = U[y-Rq(y, t, x, R, a)-tx, q(y, t, x, R, a), a]. For an open city model, household utility *U* at equilibrium is exogenously determined when migration is costless, which is equal to the maximum utility attainable elsewhere in the economy. Denote the exogenous utility level by *V*, which is expressed as

$$V = U(y-Rq(y, t, x, R, a)-tx, q(y, t, x, R, a), a) \tag{1}$$

For given income level, transportation cost, and residential community, land rent R has to change such that U(y, t, x, a, R) = V. Solving equation (1) for *R*, we can derive the equilibrium land rent R = R(y, t, x, V, a), which represents the bid rent of each household for per unit land in community *(x, a)* at market equilibrium. We suppress all arguments but open space area *a*, and express the equilibrium land rent *R* as a function of preserved open space, R = R(a). Assume the utility function U(·) is concave, and it can be shown that

$$R''(a) = \frac{U_a''}{U_z''} > 0 \text{, and } R''(a) = \frac{U_a''U_z' + U_a'U_z''}{U_z'^2} < 0$$

which indicate that the equilibrium land rent is increasing with the amount of preserved open space at a decreasing rate.

For a community with preserved open space *a*, the equilibrium price per unit land *P(a)* is the present value of the flow of equilibrium land rent net of property tax in an infinite horizon, i.e., $P(a) = (R(a)-P(a)\tau)/\delta$, where δ is the discount rate, and τ is the property tax rate. Further, equilibrium land price P(a) can be solved as $P(a) = R(a)/(i+\tau)$. That is, equilibrium land price equals equilibrium land rent divided by the sum of the discount rate and the property tax rate. Similarly, the equilibrium land price in the community increases with preserved open space at a decreasing rate, $P'(a) > 0$, $P''(a) \leq 0$. This linkage between equilibrium land price and preserved open space shows how property value would respond to open space preservation in a dynamic setting, which constitutes the basis for using property tax increment to finance investment in open space.

The context for exploring the potential of using property tax increment to finance open space preservation is set up by a community with a total land area L and a units of preserved open space that may or may not be socially optimal. Suppose land in this community, except those preserved as open space, is privately owned by decentralized absentee landowners. The local land manager is concerned with the negative effect of urban sprawl, and decides to preserve more open space to protect against the welfare loss of local public. A practical question confronting him at the very beginning is how much more open space land need to be acquired for preservation that is socially optimal. The land manager, informed by policy analysts, knows that economic efficiency requires preserving open space up to a level such that the marginal benefit of preserving open

space is equal to the marginal cost. Denote the cost of preserving a units of open space by $C(a) = P(a^0)a$, where $P(a^0)$ is the equilibrium price for land in this community with a^0 units of preserved open space, and is the price at which more land will be purchased if further preservation is needed. Denote the benefit of preserving a units of open space by B(a), its measure, however, is not as explicit as the cost. Since the utility of local residents, under the assumption that local residents can costless migrate between communities, is exogenous, an appropriate policy objective for the local land manager is to maximize the total value of community developable land in the interest of land owners (Brueckner 1982, 1983). Therefore, the benefit of preserving open space can be expressed as $B(a) = P(a + a^0)(L - a^0 - a)$, where $P(a + a^0)$ is the equilibrium land price after a units of open space have been preserved, and $L - a^0 - a$ is the area of the remaining land after preservation. Consequently, the marginal benefit equal to the marginal cost yields

$$P'(a + a^0)\,(L - a^0 - a) - P(a + a^0) = P(a^0) \qquad (2)$$

Equation (2) can be used to determine the optimal increment of open space to be purchased, which, however, may be equal to zero, i.e., no more preservation is need for given people's preference. An interesting question is under what conditions preserving more open space would be socially efficient, which is directly related to subsequent investigation of conditions under which the socially efficient amount of open space can be financed by property tax increment.

Move $P(a^* + a^0)$ in (2) to the right hand side, and divide both sides by $(L - a^0 - a^*)$

$$P'(a^* + a^0) = \frac{1}{(L - a^0 - a^*)}(P(a^* + a^0) + P(a^0)) \qquad (3)$$

The right hand side of (3) is the marginal cost per unit remaining land, which is the sum of cost spent on purchasing an extra unit of open space and the value lost that would have been gained otherwise from this extra unit of land, divided by the amount of the remaining land. The left hand side of (3) represents the marginal benefit per unit remaining land at the optimal preservation. From the perspective of the capitalization of open space amenity in property value at market equilibrium, this marginal land price at the optimal preservation represents residents' willingness to pay for per unit preserved open space. Because residents' willingness to pay may be dependent on the price level considered, we divide both sides of (3) by the post-preservation equilibrium land price:

$$\frac{P'(a^* + a^0)}{P(a^* + a^0)} = \frac{1}{(L - a^0 - a^*)}(1 + \frac{P(a^0)}{P(a^* + a^0)}) \tag{4}$$

We use this equation to identify the condition for preserving more open space to be socially efficient, namely the condition under which $a^* > 0$. The left hand side of equation (4) is the marginal change rate in land price with respect to the amount of open space, and which can be regarded as the standardized marginal benefit per unit land of open space preservation. Let $g(a) = P'(a + a^0)/P(a + a^0)$, which describes how local residents' standardized willingness to pay (WTP) changes with preserved open space. Differentiate g(a) with respect to a,

$$g'(a) = \frac{P''(a + a^0)}{P(a + a^0)} - \frac{P'(a + a^0)}{P(a + a^0)^2} \tag{5}$$

Because $P'(a + a^0) > 0$ and $P''(a + a^0) < 0$, $g'(a) < 0$, which means residents' standardized WTP is decreasing with preserved open space.

The right hand side of equation (4) is the standardized marginal cost per unit remaining land. Let $f(a) = \frac{1}{(L - a^0 - a)}(1 + \frac{P(a^0)}{P(a + a^0)})$, which describes how the standardized marginal cost per unit remaining land would change with preserved open space. Take the first derivative of f(a) with respect to a

$$f'(a) = \frac{1}{(L - a^0 - a)^2 P(a + a^0)^2}[P(a + a^0)^2 + P(a^0)P(a + a^0) - P(a^0)P'(a + a^0)(L - a^0 - a)] \quad (6)$$

How f(a) changes with respect to a depends on the sign of the nominator of f'(a). Some algebraic manipulations can show that

if $\frac{P'(a^0)}{P(a^0)} \le \frac{2}{L - a^0}$, f'(a) > 0 for $0 < a < L - a^0$;

if $\frac{P'(a^0)}{P(a^0)} > \frac{2}{L - a^0}$, f'(a) < 0 for $0 < a < \tilde{a}$; f'(a) > 0 for $\tilde{a} < a < L - a^0$.

where $\tilde{a}$ is defined by

$$\frac{P'(\tilde{a} + a^0)}{P(\tilde{a} + a^0)} = \frac{1}{L - a^0 - \tilde{a}}(\frac{P(\tilde{a} + a^0)}{P(a^0)} + 1) \quad (7)$$

These mathematical properties show that the standardized marginal cost per unit remaining land, f(a), may decrease for up to a fixed amount of open space, increases when a is large enough, and eventually goes to infinity as a is approaching the total amount of the remaining land $L - a^0$.

Equation (4) requires at the optimal level a^* of increment of open space, the standardized marginal benefit equals the standardized marginal cost per unit remaining land, which means the curve of residents' standardized WTP g(a) crosses the curve of the standardized marginal cost per unit remaining land f(a) at $a = a^*$ (See figure 1). Since resident's standardized WTP g(a) monotonically decreases with open space, and the

standardized marginal cost per unit remaining land eventually increases to infinity with open space, g(a) will cross f(a) at least once if g(0) > f(0), i.e., $\frac{P'(a^0)}{P(a^0)} > \frac{2}{L-a^0}$.

Therefore, if residents' standardized WTP at the time of the land manager's preservation decision is sufficiently large so as to go beyond $2/(L - a^0)$, preserving more open space would improve the welfare of land owners by raising the total value of community land.

The condition $\frac{P'(a^0)}{P(a^0)} > \frac{2}{L-a^0}$ indicates preserving open space is more likely to be welfare-improving for a community with a large amount of land L that preserved a small amount a^0 of open space. This is because on one hand, the standardized marginal cost per unit remaining land $2/(L - a^0)$ is very low, on the other hand, local residents would pay more money to preserve open space, as revealed by $P'(a^0)/P(a^0)$.

We derive the following proposition.

Proposition 1 *If local residents prefer preserving open space, and if the utility function of local residents is concave in preserved open space, there is an optimal (or incremental) amount of open space that is socially efficient if local residents' (standardized) current willingness to pay for preserved open space is greater than* $\frac{2}{L-a^0}$.

III. Tax Increment Financing for Optimal Open Space Preservation

The second question confronting the land manager is the possibility of using property tax increment to finance the socially efficient incremental amount of open space. Economically, we are interested in the interaction between economic conditions of social efficiency and tax increment financing.

We extend the previous land manager's model by incorporating a budget constraint that the investment cost of open space is not greater than the collectable portion of the increased tax revenue due to appreciated land value within a planned financing period. Denote the property tax rate by τ. The tax revenue before preservation is the total current property value multiplied by property tax rate, $\tau P(a^0)(L-a^0)$; the tax revenue after preservation is the total post-preservation property value multiplied by property tax rate, $\tau P(a + a^0)(L - a^0 - a)$. Within a finance period T, the present value of aggregate increased tax revenue with the discount rate δ is

$$\int_0^T [\tau P(a+a^0)(L-a^0-a) - \tau P(a^0)(L-a^a)]e^{-\delta t}dt \tag{8}$$

Suppose the property tax represents the total of property value-based tax revenues that are collected by overlapping local jurisdictions such as the school district. Practically, this total increased tax revenue may not be available for preserving open space. Depending on the specification of the zone for tax increment financing (TIF), only a portion of the aggregate increased tax revenue may be used for preserving open space. Therefore, we introduce a factor w to capture the actual amount of tax increment that can be used to finance preserving open space:

$$\int_0^T [\tau P(a+a^0)(L-a^0-a) - \tau P(a^0)(L-a^0)]we^{-\delta t}dt \tag{9}$$

Integrate (9)

$$\frac{1}{\delta}(1-e^{-\delta T})\tau w[P(a+a^0)(L-a^0-a) - P(a^0)(L-a^0)] \tag{10}$$

which represents the total budget for preserving an incremental amount a of open space

$$\frac{1}{\delta}(1-e^{-\delta T})\tau w[P(a+a^0)(L-a^0-a) - P(a^0)(L-a^0)] \geq P(a^0)a \tag{11}$$

Simplify (11)

$$\frac{P(a+a^0)}{P(a^0)} \geq \frac{1}{L-a^0-a}[\frac{a\delta}{\tau w(1-e^{-\delta T})}+(L-a^0)] \qquad (12)$$

Inequality (12) identifies the relationship among policy parameters, such as the financing period T and property tax rate τ, residents' bid price for land, and the incremental amount a of open space, if preserving open space a is to be financed by property tax increment. Note that this inequality is derived based on a balanced budget for an arbitrary amount of open space a between 0 and $L - a^0$, the total available land. For alternative settings of policy context, (12) can be relied on to examine policy variables of interest. For example, if local land managers know how land rent changes with preserved open space, inequality (12) can be used to determine the amount of open space that can be financed by property tax increment for given policy parameters. On the other hand, (12) can also be used to identify the restriction on households' bid price for land and other policy variables if land managers intend to use tax increment to finance open space preservation.

To identify a weaker condition for using property tax increment to finance open space a, we allow an infinite financing period, $T = +\infty$. Correspondingly, (12) becomes

$$\frac{P(a+a^0)}{P(a^0)} \geq \frac{1}{L-a^0-a}[\frac{a\delta}{\tau w}+(L-a^0)] \qquad (13)$$

As before, we examine the property of the self-financed amount of open space by comparing the locus of two independent functions of preserved open space involved in inequality (13). Let $\Psi(a) = P(a + a^0)/P(a^0)$, which represents the ratio of bid price per unit land with and without preserved open space as a function of preserved open space, and $\Phi(a) = \frac{1}{L-a^0-a}[\frac{a\delta}{\tau w}+(L-a^0)]$, which represents the critical value of the bid price

ratio under the constraint of tax increment financing, given policy parameters and the amount of open space to be preserved. We can derive the following properties for these two functions:

(i) $\Psi(0) = \Phi(0) = 1$

(ii) $\Psi'(a) = \dfrac{P'(a+a^0)}{P(a^0)} > 0$, and $\Psi''(a) = \dfrac{P''(a+a^0)}{P(a^0)} < 0$

(iii) $\Phi'(a) = \dfrac{(\tau w+\delta)(L-a^0)}{(L-a^0-a)^2\tau w} > 0$, and $\Phi''(a) = \dfrac{2(\tau w+\delta)(L-a^0)}{(L-a^0-a)^3\tau w} > 0$

(iv) $\Phi'(0) = \dfrac{(\tau w+\delta)}{(L-a^0)\tau w} = \dfrac{1}{L-a^0}(1+\dfrac{\delta}{\tau w})$, and $\Psi'(0) = \dfrac{P'(a^0)}{P(a^0)}$

(v) $\lim\limits_{a\to L-a^0} \Phi'(a) = +\infty$, and $\lim\limits_{a\to L-a^0} \Psi'(a) = \dfrac{P'(L-a^0)}{P(a^0)}$

The above properties suggest that both curves $\Psi(a)$ and $\Phi(a)$ start from the same point (0, 1), and increase with the amount of preserved open space a (see figure 2). However, the bid ratio $\Psi(a)$ increases with the amount of preserved open space at a decreasing rate, while the critical value $\Phi(a)$ increases at an increasing rate which goes to infinity when a is approaching the total available land $L - a^0$. Therefore, if the marginal bid ratio $\Psi'(a)$ is larger than the marginal critical value $\Phi'(a)$ at a = 0, their loci will cross each other for some amount a^t of open space, where $\Phi(a^t) = \Psi(a^t)$, because the marginal critical value $\Phi'(a)$ goes to infinity when a is getting close to $L - a^0$. Before a is reaching a^t, $0 < a < a^t$, the bid ratio $\Psi(a)$ is greater than the critical value $\Phi(a)$, which implies property tax increment is sufficient to cover the expenditure in open space, and vice versa. In this case, a^t represents the maximum amount of open space that can be self-financed without imposing a new tax or increasing the current property tax rate.

The above mathematical exposure on the self-financed amount of open space reveals an important condition for tax increment financing. That is, the marginal bid price ratio at the starting point $\Psi'(0) = P'(a^0)/P(a^0)$ must be greater than the marginal critical value at the starting point $\Phi'(0) = \frac{1}{L-a^0}(1+\frac{\delta}{\tau w})$, otherwise the maximum amount a^t of open space that can be financed by tax increment would be zero.

So far, we have identified two amounts of open space and two types of conditions:

- the socially efficient amount of open space a*, under the condition for the marginal change rate of households' bid price with respect to open space at the starting point $\frac{P'(a^0)}{P(a^0)} > \frac{2}{L-a^0}$
- the maximum self-financed amount of open space a_t, under the condition for the marginal change rate of the bid price ratio with respect to open space at the starting point $\frac{P'(a^0)}{P(a^0)} > \frac{1}{L-a^0}(1+\frac{\delta}{\tau w})$

The central question is under what conditions the socially efficient amount of open space can be fully financed by property tax increment.

Answering the above question reduces to comparing those two amounts of open space and their corresponding conditions. The sufficient condition for a non-zero a^t that can be financed by property tax increment, $\frac{P'(a^0)}{P(a^0)} > \frac{1}{L-a^0}(1+\frac{\delta}{\tau w})$, constitutes another necessary condition for the socially efficient amount a* of open space to be self-financed. If the ratio $\delta/(\tau w)$ is less than 1, those two necessary conditions for the socially efficient amount of open space to be self-financed reduce to $\frac{P'(a^0)}{P(a^0)} > \frac{2}{L-a^0}$. Similarly, if the

ratio $\delta/(\tau w)$ is greater than 1, the necessary condition for the socially efficient amount of open space to be self-financed may be defined by $\frac{P'(a^0)}{P(a^0)} > \frac{1}{L-a^0}(1+\frac{\delta}{\tau w})$. Note that these two conditions only guarantee the existence of the socially efficient amount a^* and the self-financed amount a^t, but remain neutral on the relative magnitudes of a^* and a^t. Therefore, as long as the standardized residents' current WTP for open space, or the marginal change rate of the equilibrium land price with respect to preserved open space, is great than the larger of $\frac{1}{L-a^0}(1+\frac{\delta}{\tau w})$ and $\frac{2}{L-a^0}$, there exists at least a self-financed amount a^t of open space, and may exist a socially efficient amount a^* that can also be covered by increased tax revenue, depending on the relative magnitudes of a^t and a^*.

Unfortunately, the relative magnitude of a^t and a^* is not explicit. We proceed by examining the condition required of residents' WTP under which the socially efficient amount a^* of open space can be fully covered by property tax increment, i.e., $a^* < a^t$. We define the following system for the set Γ such that $\forall a^* \in \Gamma$ is socially efficient and can also be fully financed by property tax increment: 1) the socially efficient amount a^* of open space, $\frac{P'(a^0+a^*)}{P(a^0+a^*)} = \frac{1}{(L-a^0-a^*)}(1+\frac{P(a^0)}{P(a^0+a^*)})$; 2) the maximum self-financed amount a_t of open space, $\frac{P(a^0+a^t)}{P(a^0)} = \frac{1}{L-a^0-a^t}[\frac{a^t\delta}{\tau w}+(L-a^0)]$; 3) the self-financing condition, $\frac{P(a+a^0)}{P(a^0)} \geq \frac{1}{L-a^0-a}[\frac{a\delta}{\tau w}+(L-a^0)]$ for $a < a^t$; 4) the socially efficient amount a^* being self-financed, $a^* \leq a_t$. Conditions 3) and 4) lead to

$$\frac{P(a^*+a^0)}{P(a^0)} \geq \frac{1}{L-a^0-a^*}[\frac{a^*\delta}{\tau w}+(L-a^0)] \tag{14}$$

Substitute (14) into condition 1),

$$\frac{P'(a^* + a^0)}{P(a^* + a^0)} \leq \frac{1}{L - a^0 - a^*} + \frac{\tau w}{(L - a^0)w\tau + a^*\delta} \tag{15}$$

which is a second necessary condition for the socially efficient amount of open space to be self-financed. Recall that the condition for the existence of a non-zero socially efficient amount of open space is in favor of a large marginal change rate of equilibrium land price at the starting level of preserved open space, because a large marginal change rate of equilibrium land price means residents are willing to pay a large amount of money for preserving an extra unit amount of open space in the community, relative to the marginal cost associated with this preservation. The condition (15), however, imposes an upper bound on the marginal change rate of equilibrium land price if the increased tax revenue is the only source of fund for open space preservation. In condition (15), the right hand side can still be thought of as the marginal cost of preservation, but this marginal cost is the maximum defined by tax increment financing. If the post-preservation marginal benefit, as represented by the left hand side, is greater than the financially defined marginal cost, it would be socially efficient to preserve more open space which, however, is beyond the capacity of tax increment financing. As a result, the post-preservation marginal benefit less than the financially defined marginal cost is a necessary condition for the socially efficient amount of open space to be fully self-financed.

We summarize as follows the condition for the existence of a non-zero amount of open space that is socially efficient and that can also be fully covered by property tax increment:

- $\frac{P'(a^0)}{P(a^0)} > \max\{\frac{2}{L-a^0}, \frac{1}{L-a^0}(1+\frac{\delta}{\tau w})\}$, and

- $\frac{P'(a^* + a^0)}{P(a^* + a^0)} \leq \frac{1}{L-a^0-a^*} + \frac{\tau w}{(L-a^0)w\tau + a^*\delta}$

We derive the following proposition.

Proposition 2 *If local residents prefer preserving open space, and if the utility function of local residents is concave in preserved open space, there is an optimal (or incremental) amount of open space that is socially efficient and can be fully financed by property tax increment due to the capitalization of open space amenity, if the pre-preservation marginal change rate of equilibrium land price with respect to open space, or local residents' standardized pre-preservation willingness to pay for open space, is greater than the larger of* $\frac{2}{L-a^0}$ *and* $\frac{1}{L-a^0}(\frac{\delta}{\tau w}+1)$ *, and if the post-preservation marginal change rate of equilibrium land price with respect to open space, or local residents' standardized post-preservation willingness to pay for open space is less than or equal to* $\frac{1}{L-a^0-a^*} + \frac{\tau w}{(L-a^0)w\tau + a^*\delta}$.

IV. Effect of Spatially Heterogeneity in Open Space Amenity

The theoretical model constructed in section 2 implicitly assumes a spatially homogeneous open space amenity as if local residents equally receive the same open space amenity, as represented by the amount of preserved open space. Consequently, the preserved open space equally raises the equilibrium land price of the remaining land. In some instances such as the considered community is of small spatial scales, or the existence value of open space is prominent to local residents, this assumption may be

reasonable. Hedonic valuation studies, however, also found in many cases people value their access to preserved open space in addition to the open space amount, which leads to spatially varying land value at market equilibrium in response to the amenities that local residents perceive they actually receive from preserved open space at their residence locations (see Do and Grudnitski 1995, Geoghegan et al. 1997, Lutzenhiser and Netusil 2001, Mahan et al. 2000, Tyravinen and Miettinen 2000, for example). When the capitalization of open space amenity differs spatially, the previous economic condition for self-financed, socially efficient open space preservation may be biased toward the optimistic direction in the sense that property value may be overestimated. In this section, we introduce a distance variable in addition to open space area into the open space amenity measure, and examine how this spatial heterogeneity in open space amenities as perceived by local residents affects the economic condition of tax increment financed, socially efficient open space preservation.

As before, the residential community in a metropolitan area is represented by their location x and preserved open space a. Each household derives utility $U = U(z, q, A(a, r))$ from their consumption of a numeraire good z, housing q in the units of land area, and open space amenity A, while subject to the budget constraint $z + Rq + tx = Y$. Note that the open space amenity A is a function of the amount of preserved open space a and household specific location r relative to the open space in the community, and therefore, each household can affect the amenity level of open space at their residence location by their choice of residential community (x, a) and specific location r in the selected community. The non-spatial model in section 2, which only considered the amount of

preserved open space without referring the relative location r, can be regarded as a special case of the spatial model where A = A(a) = a.

Consider a circular residential community with a radius r_0, which, as will be seen, is not essential to the model. Assume the community has already preserved some land of a^0 units at the community center as a circular central community park, and is considering to expand the range of the park outward further, with its radius changing from r_{a0} to r_{a1}. If the area of the planned open space increment is a, the total value of the remaining land after preservation is $\int_{r_{a1}}^{r_0} P(A(a^0+a,r))2\pi r dr$, where r_{a1} is the radius of the post-preservation area of open space, with $r_{a1} = \sqrt{\frac{a^0+a}{\pi}}$. The expected cost for preserving a units of incremental open space would be $\int_{r_{a0}}^{r_{a1}} P(A(a^0,r))2\pi r dr$, which is approximately equal to $P(A(a^0, r_{a0}))a$ when the involved variation in the radius of preserved open space is limited. Consequently, the land manager's model of using property tax increment to finance socially efficient open space preservation becomes

$$\underset{a}{Max} \quad \pi = \int_{r_{a1}}^{r_0} P(A(a^0+a,r))2\pi r dr - P(A(a^0,r_0))a \tag{16}$$

$$\text{s.t.} \quad \int_0^T (\tau \int_{r_{a1}}^{r_0} P(A(a^0+a,r))2\pi r dr - \tau \int_{r_{a0}}^{r_0} P(A(a^0,r))2\pi r dr) w e^{-\delta t} dt \geq P(A(a^0,r_0))a \tag{17}$$

Compared to the non-spatial model, the model accounting for the spatial pattern of equilibrium land price is complicated by the integral of land value over the remaining land. This complicating, however, can be simplified using the average value theorem. Specifically, the total value of the remaining land after preservation

$$\int_{r_{a1}}^{r_0} P(A(a^0+a,r))2\pi r dr = \pi \int_{r_{a1}}^{r_0} P(A(a^0+a,r)) dr^2 = \pi \widetilde{P}(a^0+a)(r_0^2 - r_a^2) \tag{18}$$

where $\widetilde{P}(a^0 + a)$ is the post-preservation equilibrium land price independent of spatial location such that $\pi\int_{r_{a1}}^{r_0} P(A(a^0 + a, r))dr^2 = \pi\int_{r_{a1}}^{r_0} \widetilde{P}(a^0 + a)dr^2$.

Similarly,

$$\int_{r_{a0}}^{r_0} P(A(a^0, r))2\pi r dr = \pi\widetilde{P}(a^0)(r_0^2 - r_{a0}^2) \tag{19}$$

where $\widetilde{P}(a^0)$ is the pre-preservation average equilibrium land price independent of spatial location. If we still assume the total area of community land is L, the total value of the remaining land after preservation becomes $\widetilde{P}(a^0 + a)(L - a^0 - a)$, and the total value of the land before preservation is $\widetilde{P}(a^0)(L - a^0)$. Therefore, the spatial model of tax increment financing of socially efficient open space transforms into

$$\underset{a}{Max} \quad \pi = \widetilde{P}(a^0 + a)(L - a^0 - a) - P(A(a^0, r_0))a \tag{20}$$

$$\text{s.t.} \quad \int_0^T [\tau\widetilde{P}(a^0 + a)(L - a^0 - a) - \tau\widetilde{P}(a^0)(L - a^0)]we^{-\delta t}dt \geq P(A(a^0, r_0))a \tag{21}$$

which is exactly the same as the non-spatial model except that the equilibrium land price is replaced by some spatial average value. Therefore, the basic conclusion based on the non-spatial model would not change except the non-spatial equilibrium land price replaced by the spatial average land price.

Practically, to evaluate the condition for the self-financed, socially efficient amount of open space for communities with given parameters requires estimation of the marginal change rate of equilibrium land price, or residents' WTP, at both pre- and post-preservation levels of preserved open space. The equilibrium land price may exhibit a spatial pattern rather than a spatially homogenous rate of capitalization when communities or cities are sufficiently large, but often when tax increment financing is

invoked for constructing local infrastructure, the involved area is commonly restricted to a smaller in situ area or block, i.e., the financing district, rather than the whole city. In this area, equilibrium land rent can be considered spatially homogeneous. Specifically, estimating the marginal change rate of equilibrium land rent requires defining and compiling a data set of land price for districts or small communities across the metropolitan area that contain varying amount of preserved open space, such that equilibrium land price is homogeneous with respect to open space within the district and heterogeneous with respect to open space among districts. Consequently, a hedonic land price function, $\ln P(a) = f(x_1, x_2, \ldots, a, a^2, a^3, \ldots)$ can be estimated, where x_i represents land characteristics that affect land value. Because $\frac{P'(a)}{P(a)} = \frac{\partial \ln P(a)}{\partial a} = \beta_0 + \beta_1 a + \beta_2 a^2$, where β_i is the estimated coefficient parameter, the marginal change rate of equilibrium land price can be estimated for different amounts of open space. Even if the involved area for tax increment financing is large enough to support spatially varying equilibrium land price, the spatial average equilibrium land price can be estimated more easily by the normal procedure of hedonic method without dividing the city into small homogeneous tracts. In addition, a contingent survey can also be used to directly solicit local residents' WTP for open space. Benefit transfer presents another option to derive the information that is needed for evaluating the decision of open space preservation.

In the investigation of the economic condition for a self-financed, socially efficient system of open space preservation, we didn't impose strong restrictions on the common utility function such as specifying a specific function form except only requiring concavity. Consequently, the economic condition is derived as general as possible. For example, the marginal change rate of equilibrium land price is a non-linear rather than

linear function of preserved open space. In many empirical studies, the equilibrium land price is estimated as a linear function of preserved open space. In such a context, even more simple conditions can be identified. For example, in the linear case, the economic condition for the socially efficient amount of open space to be self-financed would be

$$\max\{\frac{2}{L-a^0}, \frac{1}{L-a^0}(1+\frac{\delta}{\tau w})\} < \frac{P'(a^0)}{P(a^0)} \leq \frac{1}{L-a^0-a^*} + \frac{\tau w}{(L-a^0)w\tau + a^*\delta}$$ for a small community or tax increment financing zone. For a large community where it is reasonable to assume a spatially heterogeneous equilibrium land price, the condition is modified by replacing the marginal change rate of equilibrium land price with its spatial average.

V. Spatial Configuration of Open Space

To local land managers, the preservation of open space practically is a matter of how to construct such open space to maximize its net social value. Is one large tract of open space better than several small spatially separated ones? Where should the optimal open space be located to maximize its amenity effect on local residents? How does the shape of open space affect its amenity to local residents through the interaction of area and access? Perhaps, local land managers are also interested in what is the possible spatial configuration for the socially efficient, self-financed open space that is socially optimal.

In this section, we explore the effect of spatial configuration of preserved open space on the value of community developable land and the financing capacity of property tax increment. We relate the spatial structure of open space to be considered to the practical question of how large, how many, what shape, and where to locate which local land managers are most concerned with for preserving open space. We extend our

theoretical model to incorporate these policy-related spatial considerations in a two-dimensional coordinate system and assume the community has no preserved open space. As will be shown below, incorporating the spatial aspects of open space dramatically complicates the model such that a closed-form, tractable analytical solution is impossible without further assumption. Consequently, we use a simulation approach to explore these spatial effects, and expect the simulation results would reveal implications for the optimal structure of open space in the context of tax increment financing.

Similar to the non-spatial model, the spatially explicit model maximizes the net value of community land by investing in open space subject to the capacity of tax increment financing.

$$\underset{a(x_0,y_0),s}{Max} \quad \pi(a(x_0,y_0),s) = [\iint_{\Omega} P((x,y),a(x_0,y_0),s)dxdy - P(0)a(x_0,y_0)] \qquad (22)$$

$$\text{s.t.} \quad \int_0^T [\iint_{\Omega} \tau P((x,y),a(x_0,y_0),s)dxdy - \tau P(0)L]we^{-\delta t}dt \geq P(0)a(x_0,y_0) \qquad (23)$$

where $P((x,y), a(x_0,y_0), s)$ is location-specific equilibrium land price, depending on its location (x,y) relative to the location (x_0,y_0) of the preserved open space with an area $a(x_0, y_0)$ and shape s, and Ω is the set of (x, y) within the community but not belonging to the preserved open space $a(x_0, y_0)$.

Assume the utility function of local residents is in the form of a Cobb-Douglas function, $U(z, q, A(x,y)) = z^{\alpha}q^{1-\alpha}A(x,y)^{\beta}$, where $A(x,y)$ is location-specific open space amenity at (x,y) determined by the distance to the location (x_0,y_0) and the configuration of open space $a(x_0,y_0)$, and α and β are preference parameters with $0 < \alpha < 1$ and $\beta > 0$. Following the same steps as with the non-spatial model, we can derive the utility-

maximizing choice of numeraire good *z* and house size *q* at each location *(x,y)* for given land rent *R* and travel cost *t*,

$$z = \alpha(m - tD(x,y)) \tag{24}$$

$$q = (1- \alpha)(m - tD(x,y))/R \tag{25}$$

Similarly, we can solve for the land rent function,

$$R(x,y) = [\alpha^{\alpha}(1-\alpha)^{(1-\alpha)}A(x,y)^{\beta}(m-tD(x,y))/V]^{1/(1-\alpha)} \tag{26}$$

Therefore, the equilibrium land price

$$P(x,y) = [\alpha^{\alpha}(1-\alpha)^{(1-\alpha)}A(x,y)^{\beta}(m-tD(x,y))/V]^{1/(1-\alpha)}/(\delta+\tau) \tag{27}$$

which describes how equilibrium land price varies spatially with respect to open space amenity *A(x, y)*, income *m*, distance to the CBD *D(x, y)*, the exogenous level of utility *V*, and preference parameters, α and β.

To examine the effect of the size, shape, and location of preserved open space, we need to further specify the location-specific open space amenity in relation to the spatial structure of open space. Unfortunately, precisely describing open space amenity is an empirical question, and there is no theoretical *a priori* on their quantitative representation except some empirical findings regarding the spatial pattern of land value. Generally, empirical studies have agreed on that 1) the further from preserved open space, the lower property or land value; and 2) the larger preserved open space, the higher property or land value. Since land rent (or price) is a monotonic function of open space amenity on that land, these empirical findings may help discover an empirically effective measure of open space amenities that is consistent with people's perception. We adopted with some modification a function used by Wu and Plantinga (2003) to describe open space amenity that is consistent with those empirical restrictions

$$A(x,y) = 1 + e^{-\gamma d(x,y|x0,y0,s)} a(x_0,y_0) \quad (28)$$

where $d(x,y|x_0, y_0, s)$ denotes the distance from any location (x,y) to the open space at (x_0,y_0) with shape s, and γ is the dissipating parameter of open space amenity.

By this specification, open space amenity decreases with the distance from and increases with the size of preserved open space. The shape s affects amenity level through its effect on local accessibility of open space measured by the distance from each land parcel to the edge of preserved open space. Substituting the amenity function into equation (27), we derive

$$P((x,y)|a(x_0,y_0),s) = [\alpha^{\alpha}(1-\alpha)^{(1-\alpha)}(1 + e^{-\gamma d(x,y|x0,y0,s)} a(x_0,y_0))^{\beta}(m-tD(x,y))/V]^{1/(1-\alpha)}/(\delta+\tau) \quad (28)$$

Without loss of generality, we suppress the difference in the distance of each land parcel within a community to the CBD, and use $P(0)$ to represent equilibrium land price without preserved open space. As a result, the equilibrium land price function can be expressed as product of land price without open space $P(0)$ and open space amenity $A(x,y)$,

$$P((x,y), a(x_0,y_0), s, P(0)) = P(0)(1 + e^{-\gamma d(x,y|x0,y0,s)} a(x_0,y_0))^{\beta/(1-\alpha)} \quad (29)$$

We use this land price function to simulate the effect of some common spatial configurations of open space on the net value of community land and the capacity of tax increment financing for a rectangle-shaped (4000m×8000m) community, centered at coordinate origin, with x ranging from –2000m to 2000m, and y ranging from –4000m to 4000m. This community can also be considered as a district in a city that uses property tax increment to finance preserving open space. Table 1 presents the value of parameters we used for simulation.

Effect of the Location of Open Space

We first focus on one of the most common forms of open space, circular open space such as a community park. The context is set up by two practical questions frequently raised: 1) What is the optimal size of community park? and 2) Where should the community park be located to have maximal social value? These two questions, although raised separately, are related to each other. We will simulate 1) how the net value of community land varies with the size of open space, 2) how the size of open space affects the capacity of property tax increment to finance public investment in this open space, and 3) how the location of open space affects the above relationships.

Figure 3 presents three scenarios with differently located community park for simulation. Panel A describes the idea of providing a central park in the community with coordinate origin (0,0) at the park center. Panel B and C change the location of the community park to the right with park center at (1000,0) and to the upper community with park center at (0,2000) relative to community center, respectively. Figure 4 summarizes how the net value of community land and property tax increment vary with respect to the size of open space for different spatial location. As we can see, in all spatial locations, there exists a globally optimal amount of open space that can be financed by tax increment within a 5-year period. Specifically, panel A shows the net social value of a center-located circular open space increases until the size of open space reaches 500 acres, and decreases when the area of open space is beyond 500 acres. Property tax increment also illustrates the same tendency. Interestingly, the peak-value size of open space is not the maximum amount that can be financed solely by increased tax revenue, which is around 1250 acres when the increased tax revenue drops to zero

within a 5- year horizon of financing. This means, although the property tax increment can finance more investment than desired in open space, that public investment may not be socially optimal.

Panel B and C illustrates the location effect. Although both the net social value of open space and property tax increment demonstrate similar trends with respect to the area of open space, the peak-value size of open space is different in three spatial locations. As we can see, the peak-value size is 400 acres for the open space located to the right and 300 acres for located in the upper community relative to community center, which implies the maximum net social value of open space could be different for different locations. In our simulation, the maximum net social value of open space that can be reached is the highest with the central location. Also, tax increment curve is different in three locations. When the community park is located to the right of community center, the maximum capacity of tax increment financing is around 1130 acres, while it drops to 1010 acres when open space is located in the upper community.

These changes in both the financing capacity of property tax increment and the net social value caused by varying locations can be attributed to the effect of community shape on the externality of open space. Preserving open space in a community can be considered as producing an amenity field, analog to the physical gravity or magnetic field, in which each location is associated with an amenity generated by that open space. When open space is located in community center, most, if not all, of its positive externality is captured in the value of the land within community boundaries (or more community land are covered by open space amenity). But when open space is not centrally located, it is very likely that relatively less positive externality is captured into

land value, and more open space amenity would spill over community boundaries. Moreover, we can predict that the net social value of open space and the capacity of the property tax increment could be even lower when open space is located near to the boundary of a local jurisdiction because more of the positive externality would arise outside the community's territory.

Based on the simulation, we can derive two general results. If local residents desire the public open space like a community park, and do care about the size and accessibility of such open space, central location is more likely to generate higher social value and improve the capacity of tax increment financing for public investment in open space. Second, exhausting the capacity of tax increment financing to provide the maximum possible amount of open space may not be socially desirable and may even decrease the net social value of open space although such investment may not impose extra fiscal burden on local town government.

Effect of the Distribution of Open Space

Very often local policy-makers must decide between providing one large tract versus several small pieces of open space. We simulate this distribution effect in this subsection. Theoretically, the spatial distribution of open space can be a continuous function of spatial location, but in real world it is more likely to be discrete. Here we only consider several typical discrete cases with circular open space that are of policy concern. We first focus on two circular open space with equal areas and simulate the effect of location and the distance between them. More specifically, we examine how the net value of community land and property tax increment change with the interdistance between open space for three different locations: diagonal, x axis, and y axis. To

compare with a single large circular open space, we equalize the total area of two circular open space to the optimal amount of one circular open space as identified previously. Subsequently, we examine four circular open space and alternate the total area.

Figure 5 shows distribution of two circular parks of open space in different directions. As demonstrated by figure 6, in all three directions, the net social value of open space and property tax increment increase first and then decrease with the distance between open space. However, the turning points at which both net social value and tax increment change from increasing to decreasing are different. When located along the community diagonal, both net social value and tax increment reach their peaks when the interdistance between open space is 2100m, while the peak-value interdistances are 600m and 3000m respectively when located along *x* axis and *y* axis from community center. If we compare these peak-value interdistances with the interdistance resulting from geometrically even division, we will find the former is no less than the latter. As shown by figure 6, after adjusting for the size of open space, the peak-value distance is 3628m for diagonal, 1728m for *x* direction, and 4128m for *y* direction, while the interdistance based on geometrically even division is 2981m for diagonal, 1333m for *x* direction, and 2666m for *y* direction, shorter than those peak-value interdistances. A possible explanation is, the overlap of amenity on land located between open space tends to increase the interdistance of open space to balance with land located outside of the overlap of amenity. As a result, the comparison suggests that optimal location tends to evenly distribute open space at least physically. This property is implicitly consistent with the finding in the previous section, that is, a single open space should be located in the center of a community, and two open space should be evenly distributed in the chosen

direction. Furthermore, the interdistance between open space should be greater than the average distance in the chosen direction as long as the amenity effect of open space can reach half of the average distance.

The comparison of the net social value of open space among these three types of locations further confirms the optimal rule of evenly distributing open space amenity. With this rule of even distribution, the optimal location of two areas of open space should be in favor of locations in the *y* direction relative to the *x* direction because the community is rectangle-shaped with the *y* dimension being longer than the *x* dimension, and locating along the long dimension could more evenly distribute open space amenity without more amenity falling outside the community. The comparison of the distribution effect is not explicit between the *y* or *x* direction and the diagonal direction. Although the diagonal is longer than the length of community, panel A shows the distribution of open space amenity is not even, with the land at the end of the diagonal getting more amenity than the land at the end of the other diagonal. Therefore, the comparison between *y* or *x* direction and diagonal is ambiguous depending on how the amenity effect of open space distributes as perceived by local residents.

Next, we simulate the size effect for four evenly distributed circular open space (see figure 7 panel A). The open space are spatially located such that the interdistance between open space in *x* and *y* directions are consistent with the peak-value distance identified for two circular open space.

Panel B summarizes the area effect of the open space on the net value of community land and property tax increment. Note the area of open space on *x* axis indicates the total area of four circular areas of open space. Interestingly, the peak-value

size of open space for net social value is 450 acres, smaller than its counterpart for a single open space, while the capacity of tax increment financing is 1270 acres, larger than that for one single large open space. We compare the maximum net social values of four evenly distributed areas of open space and one central park, and find the four areas with a value of $\$7.6634\times10^7$ is larger than the single park with a value of $\$7.4724\times10^7$. This result seems to suggest that splitting one large open space into several small pieces and evenly distributing these pieces may improve the net social value of open space and create more tax increment and thus financing capacity. The comparison between two areas of open space and one large tract of open space also supports this result. In other words, changing the distribution of open space can be a useful tool for policy-makers especially in situations such as insufficient tax increment to finance preserving open space.

Effect of the Shape of Open Space

In this subsection, we examine the effect of the shape of open space on the net value of community land and property tax increment. We consider two typical shapes of open space: ring (a circular belt), and cross (see figure 8). For the shape of a cross, we focus on the area effect when open space is located across a community center, while for a ring-shaped green belt, we not only examine the area effect but also simulate the effect of spatial locations.

Figure 9 illustrates the shape effect of open space. Panel A and B compare different locations of an open space ring. Specifically, when open space is located at 300m from the center of community, the net social value reaches its maximum of $\$7.5407\times10^7$ at 432 acres; while when open space is located at 900m from the center of

community, the net social value reaches its maximum of $\$7.8889\times10^7$ at 402 acres. This comparison demonstrates the interaction between area and location, and implies that the ring-shaped open space could be more efficient in terms of higher net social value and lower size of open space when located farther or the radius of the ring is larger within certain distance. This result is consistent with intuition since the larger the radius of ring, the larger the perimeter and thus more developable land exposed to open space amenity for a given amount of open space. Because of this value effect, the capacity of tax increment financing is larger when the radius is 900m with the size of around 1440 acres than when the radius is 300m with the size of around 1275 acres. Panel C reveals a very different peak-value size for the cross-shaped open space, where the peak-value area is around 300 acres with a maximum net social value of $\$7.8435\times10^7$.

Combining these results with the case of circular open space, we do find the shape of open space could affect the net social value of open space as well as the capacity of tax increment financing. Which shape of open space is preferred depends on the policy objective of local jurisdiction and other constraints. In our simulation example, the ring shape, among other shapes, maximizes, at least for the given preference, the net social value of open space without incurring extra cost for financing these investments. However, the ring-shaped open space may not be most efficient in terms of the net social value per unit investment because the cross-shape can reach a similar net social value with a smaller amount of open space preserved.

Nonetheless, a central large open space like a community park may be relatively easy to set aside and socially desirable with less administration and/or transaction cost and other political, legal, and fiscal constraints. For example, although requiring less

acquisition of open space land, the cross and the ring shapes may involve a large group of private landowners and consequently the administration or transaction costs to acquire their land may be prohibitive, while a central park may be administratively more desirable involving less private landowners. However, in case that acquiring open space is extremely difficult, the cross-shaped open space might be a most desirable choice for local land managers because the cross-shape requires a smaller amount of open space to achieve a greater gain in the net social value.

To summarize, the ring shape with large radius is optimal in terms of the net social value achieved but not efficient, while the across shape is most efficient in terms of social value achievement for per unit open space preserved but may not be politically defendable. A central circular open space may be a good alternative for both shapes of open space by its reasonable efficiency and political desirability.

VI. Conclusions

Preserving open space has been an important issue for local governments. Given the strong support of local residents for open space preservation, a practical question left to local policy-makers is how they can finance the public investment in open space preservation in a politically desirable way. Do local governments need to impose an open space fee or raise the tax rate to finance open space preservation? Our economic study shows charging a fee or raising the tax rate may not be necessary. The reason is simple although the underlying mechanism is less explicit. People value and are willing to pay for open space preservation in their neighborhoods. People pay for open space through "vote with your feet" and consequently capitalize their valuation of open space

into residence location. This capitalization raises property value, and further increases tax revenue that may be sufficient enough to fully cover the investment in open space. Our economic model identified under what condition(s) there exists a non-zero socially efficient amount of open space that can be fully financed by property tax increment. However, people value open space differently and only pay for the amount of amenity they receive at their residence location from preserved open space rather than pay at a fixed rate. Our economic model demonstrates these spatial effects of structured open space by simulating different spatial configurations that may be commonly have been commonly considered by local land managers in preserving open space.

Our economic model shows that there exists an optimal amount of open space that can maximize the net value of community land, as long as local residents' (standardized) current willingness to pay for open space, as revealed by the marginal change rate of equilibrium land price with respect to open space, is more than 2 times the inverse of the total area of community developable land, a very weak condition given the typical magnitude of relevant parameters for a community. This condition establishes the theoretical foundation for local governments to preserve open space but remain neutral on how to finance open space preservation. If local governments intend to use the property tax increment to finance acquiring open space land, there exists at least a second best level of open space that can be fully financed by increased tax revenue and that may be socially efficient, as long as the maximum possible marginal change rate of the equilibrium land price with respect to open space is greater than the larger of $\frac{2}{L-a^0}$ and $\frac{1}{L-a^0}(\frac{\delta}{\tau w}+1)$. Surprisingly, a strong capitalization of open space amenity into land

value may not guarantee the socially efficient level of open space to be self-financed. For the socially efficient level of open space to be self-financed, the marginal change rate of post-preservation equilibrium land price with respect to preserved open space must be less than or equal to $\frac{1}{L-a^0-a^*}+\frac{\tau w}{(L-a^0)w\tau+a^*\delta}$, the financially defined marginal cost. Although derived based on spatially homogeneous open space amenity, these conditions can be extended to spatially distributed open space amenity if people's bid price is taken as a spatial average.

Our simulation results for the spatially explicit open space model not only show the existence of an optimal amount of open space that can be financed by property tax increment even for a weak preference for open space preservation (with a utility elasticity of 0.04 with respect to open space), but also illustrate the spatial configuration of open space does matter in terms of the net value of community developable land and the capacity of tax increment financing. Generally speaking, an evenly distributed, centrally located open space can achieve greater net social value and stronger capacity of tax increment financing than other spatial configurations of open space. That is, a central location is better than non-central location, several small pieces is better than one large piece, a ring shape is better than a circle, and a cross shape may or may not be more efficient than a ring shape. However, a central community park may be politically desirable by less administration or transaction cost involved in the acquisition of involved open space land if private ownerships of the land involved are relatively concentrated. These optimal spatial configurations, we suspect, are very likely to be robust, since they tend to maximize the coverage of the positive externality of open space. Moreover, the people's preference and the description of open space amenity used in our simulation are

representative, at least to the extent that they capture the basic characteristics of how people value open space as found in many empirical studies. Another important finding we believe valuable to local policy-makers is exhausting the capacity of tax increment financing to acquire open space land may not be socially desirable if local governments decide to do so.

Reference

Anderson, J. E., 1990, Tax Increment Financing: Municipal Adoption and Growth, *National Tax Journal* 43, 155-163.

Bengston, D. N., Fletcher, J. O., and K. C. Nelson, 2004, Public Policies for Managing Urban Growth and Protecting Open Space: Policy Instruments and Lessors Learned in the United States, *Landscape and Urban Planning* 69(2004), 271-286.

Brueckner, J. K., 1983, Property Value Maximization and Public Sector Efficiency, *Journal of Urban Economics* 14, 1-15.

Chapman, J.I., Tax Increment Financing as a Tool of Redevelopment, 1998, in Ladd, H.F.(ed.) Local Government Tax and Land Use Policies in the United States, Edward Elgar Publishing, Inc.: Massachusetts, USA, 182-198.

Do, A.Q. and G. Grudnitski, 1995, Golf Courses and Residential House Prices: an Empirical Investigation, *Journal of Real Estate Finance and Economics* 10(3): 261-70.

Dye, R. F. and D. F. Merriman, 2006, Tax Increment Financing: a Tool for Local Economic Development, *Land Lines* 18(1): 2-7.

Fox, T., 1990, Urban Open Space: an Investment that Pays, New York: The Neighborhood Open Space Coalition.

Geoghegan, J., Wainger, L.A. and N.E. Bockstael, 1997, Spatial Landscape Indices in a Hedonic Framework: an Ecological Economics Analysis Using GIS, *Ecological Economics* 23(3): 251-64.

Goodnough, A., In Florida, Big Developer Is Pedding Rural Chic, New York Times, 2005 (August 22), page A11.

Heal, G., 2001, Bundling Public and Private Goods, http: //www.gsb.columbia.edu/ faculty /gheal.

Kelly, E. D., 1993, Managing Community Growth: Policies, Techniques, and Impacts, Praeger: Westport, Connecticut.

Lerner, S. and W. Poole, 1999, the Economic Benefits of Parks and Open Spaces, the Trust for Public Lands.

Lutzenhiser, M. and N.R. Netusil, 2001, the Effect of Open Space on a Home's Sale Price, *Contemporary Economic Policy* 19(July): 291-98.

Mahan, B.L., Polasky, S., and R.M. Adams, 2000, Valuing Urban Wetlands: a Property Price Approach, *Land Economics* 76(Feb.): 100-113.

McConnell, V. and M. Walls, 2005, The Value of Open Space: Evidence from Studies of Nonmarket Benefits, Resource for Future.

Myers, P. and R. Puentes, 2001, Growth at the Ballot Box: Electing the Shape of Communities in November 2000, discussion paper, Center on Urban and Metropolitan Policy, The Brookings Institution, Washington, D.C..

National Association of Realtors, NAR survey shows public support for open space depends on use and cost, 2001, http: //www.realtor.org/SG3.nsf/Pages/ mngrtpresssurvey?OpenDocument.

Netusil, N.R., Boyd, E., Griffen, Z.V., LaMerrill, M., and E. Rainsberger, 2000, Can Open Spaces Be Sefl-Financing? *Choices* 2000 (Second Quarter): 21-23.

Porter, D.R., 1997, Managing Growth in America's Communities, Island Press, Washington, DC.

Tiebout, C., 1956, A Pure Theory of Local Expenditures, *Journal of Political Economy*

64, 416-424.

Tyravinen, L. and A. Miettinen, 2000, Property Prices and Urban Forest Amenities, *Journal of Environmental Economics and Management* 39(2): 205-23.

Wu, J. and A. J. Plantinga, 2003, The Influence of Public Open Space on Urban Spatial Structure, *Journal of Environmental Economics and Management* 46: 288-309.

Table 1. The Value of Parameters Used in Simulation

Parameter	Value	Interpretation
α	0.5	The proportion of disposable income adjusted by travel cost spent on housing
β	0.04	The relative elasticity of utility with respect to open space amenity
γ	0.002	Dissipating parameter of open space amenity
δ	0.05	Discount rate
τ	0.15	Property tax rate
T	5 years	Financing period
R(0)	$400	Land rent without open space amenity

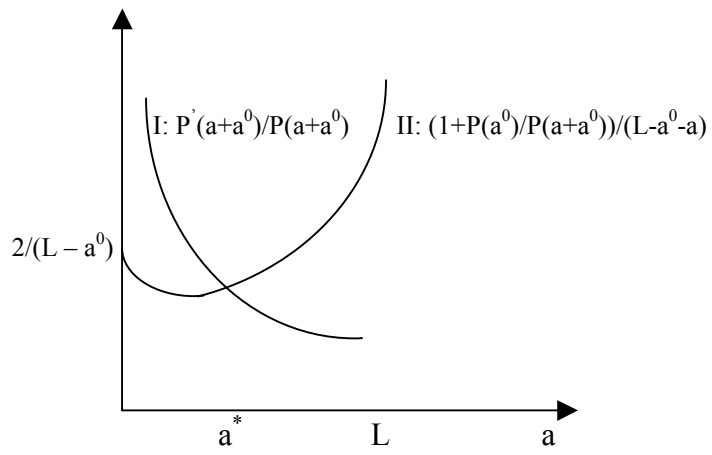

Figure 1. Demonstration of the Existence of the Optimal Amount of Open Space

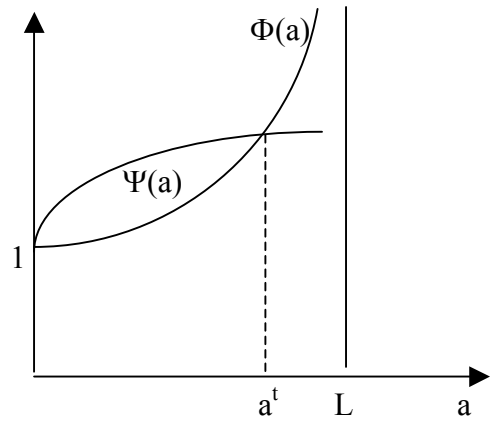

Figure 2. Demonstration of Tax Increment Constraint

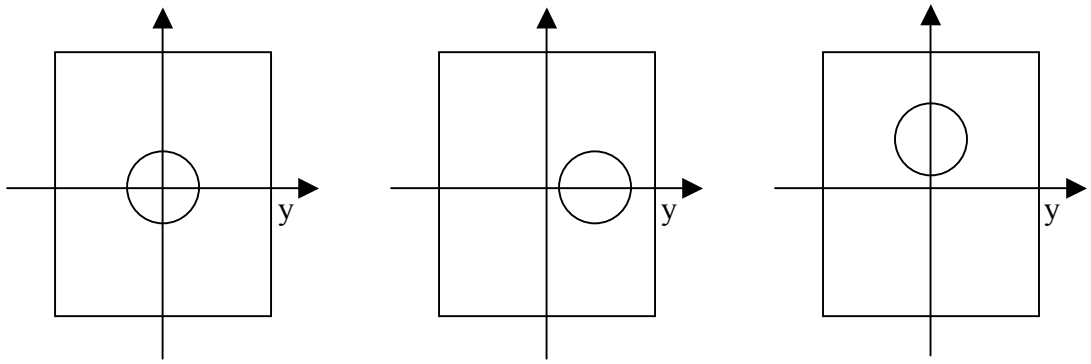

A B C

Figure 3. Demonstration of Community Park and Spatial Location

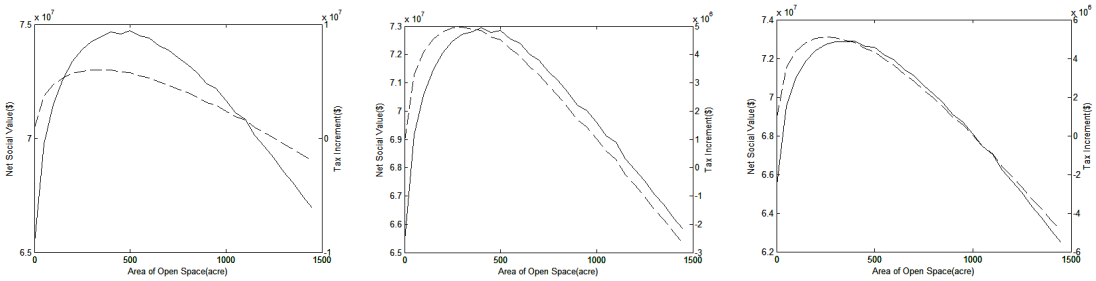

A B C

——— Net social value -------- Tax increment

Figure 4. Value Effect of Spatial Configuration of Circular Open Space

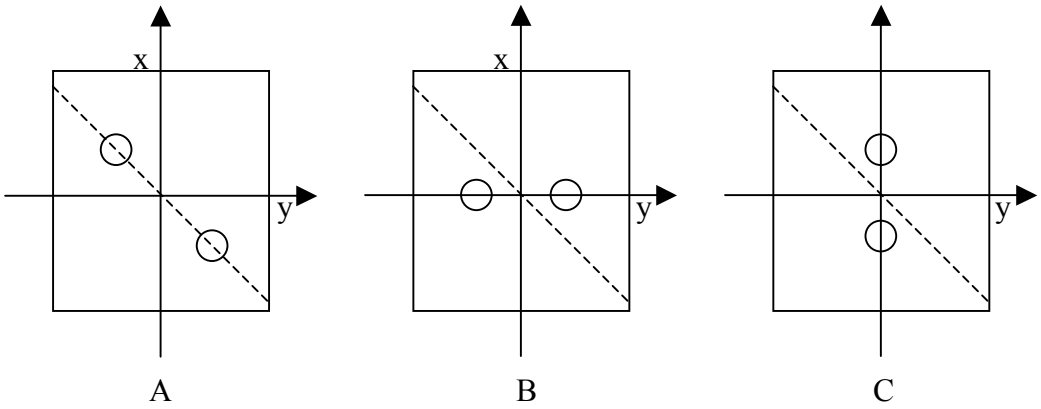

Figure 5. Demonstration of Two Circular Open Spaces and Spatial Locations

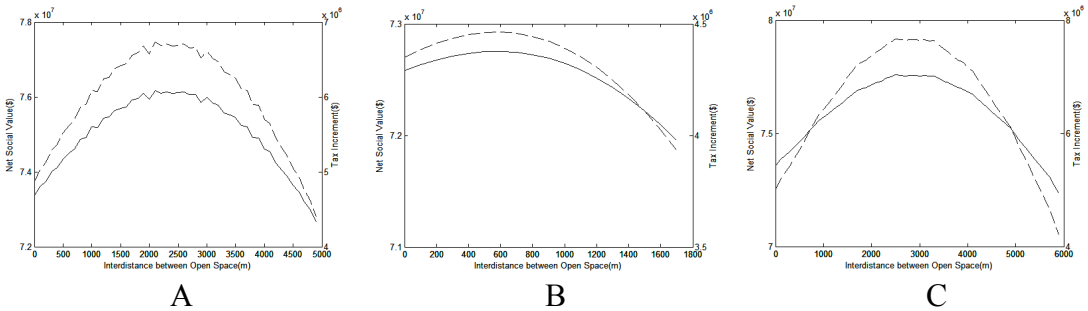

——— Net social value -------- Tax increment

Figure 6. Distributional Effect of Circular Open Space

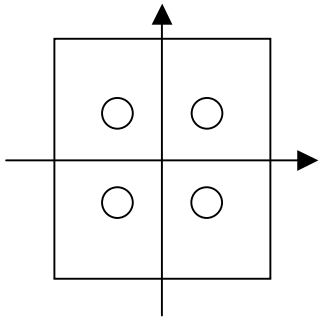

A

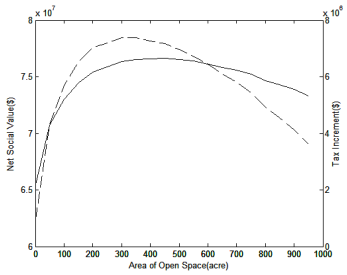

B

Figure 7. Demonstration of Four Evenly Distributed Circular Open Space

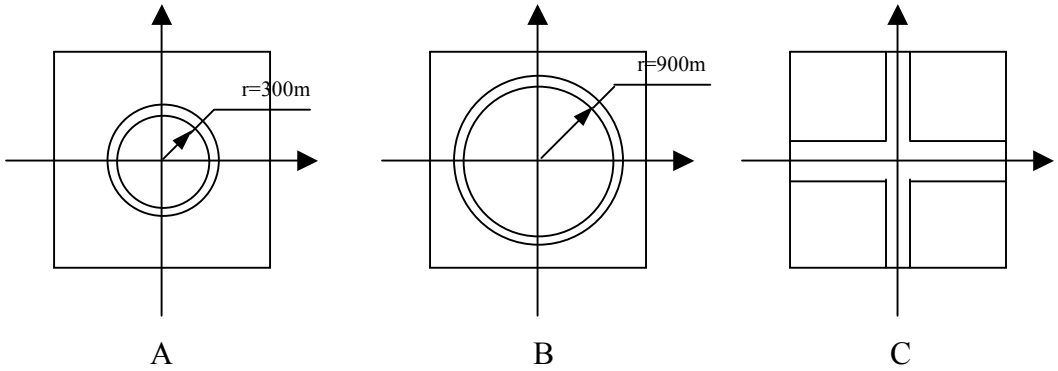

Figure 8. Demonstration of Open Space Shape and Location

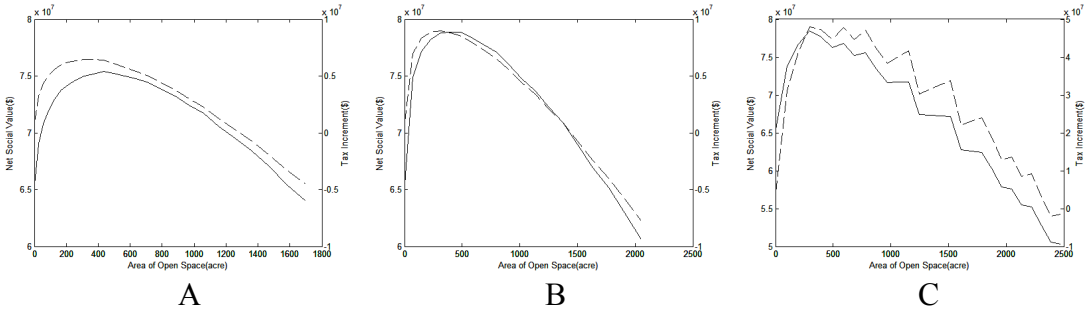

Figure 9. Shape Effect of Open Space