POLICIES, PLANNING AND MANAGEMENT FOR AGRICULTURAL DEVELOPMENT

PAPERS AND REPORTS

FOURTEENTH
INTERNATIONAL CONFERENCE
OF AGRICULTURAL ECONOMISTS

Held at the Byelorussian
State University, Minsk, U.S.S.R.

AUGUST 23rd–SEPTEMBER 2nd 1970

OXFORD
INSTITUTE OF AGRARIAN AFFAIRS
FOR
INTERNATIONAL ASSOCIATION OF AGRICULTURAL
ECONOMISTS
1971

SPECIAL GROUP O

Chairman: D. Gale Johnson *U.S.A.* *Rapporteur*: D. K. Britton *U.K.*

Production Quota Systems with Production Uncertainty

ROBERT EVENSON
Yale University, U.S.A.

Production quotas[1] have been used or proposed as policy instruments for a number of agricultural commodities in a number of countries in recent years.[2] With expansion of grain production in a number of developing countries creating surplus problems and depressed farm prices their use is likely to be increased. Previous authors have analyzed the welfare costs or losses due to inefficient resource allocation, but little attention has been paid to the cases where production is subject to uncertainty.[3] This paper analyzes several alternative quota systems under conditions of production uncertainty and evaluates their welfare cost and income distribution effects.

The Analysis Under Production Certainty

Analysis of a simple quota system under conditions of production certainty provides a convenient starting point for the treatment of more complex systems later. Throughout the discussion it will be assumed that international trade in the commodity is not involved.[4] The mechanics of the system are assumed to be as follows: *Coupons*, entitling the holder to sell a specified quantity of the commodity, are issued at the beginning of each production period to the holders or owners of *quotas*. The quota is a permanent right to receipt of coupons in the future. Each quota has a production base, determined at the time of issue by the governing body responsible for the administration of the system. Typically, the original quotas would be issued to producers of the commodity, with the production bases being determined by recent production history. For each production period a total coupon quantity, $\overline{Q}$, is determined and these coupons are issued

1 The term, production quota, refers to direct limitations on crop production rather than limitations on input use, such as acreage restrictions or allotments. Because of input substitution the analysis of input restrictions differs substantially from the direct quota analysis.

2 For example, Argentina has instituted a production quota system for sugarcane in recent years. Various forms of such quotas are in force for other commodities as well. The lemon prorate (Smith [4]) in the United States is an example of a modified quota system.

3 An exception is the recent paper by Welch [6] ;

4 In most cases the extension of the analysis is straightforward. In fact the imposition of quotas may be due to trade considerations in some cases.

to quota holders in proportion to the production bases of the quotas. Both the coupons and the quotas are negotiable.

Figure 1 depicts the analysis of the determination of the price of the coupon. In this diagram DD is the 'real income compensated' demand curve for the commodity.[5] The intermediate-run[6] supply curve is the curve SS. The free market price is P_m and free market quantity Q_m. Suppose the governing agency establishes a total coupon quantity of $\bar{Q}$. The price will then be $\bar{P}$. The rationale for the quota system is usually based on the need to attain some specific price for the commodity, and the coupon quantity is set to attain it. Producers of course would prefer the highest price possible for their commodity. In the case in which technological change in the form of new crop varieties and other improved inputs has shifted the supply curve downward and to the right it may be true that the price, P_m, does not cover total average costs for most or all of the producers. Producers naturally wish to avoid the adjustments required by the market solution in the long run and argue for a 'fair' price to cover their total average costs.

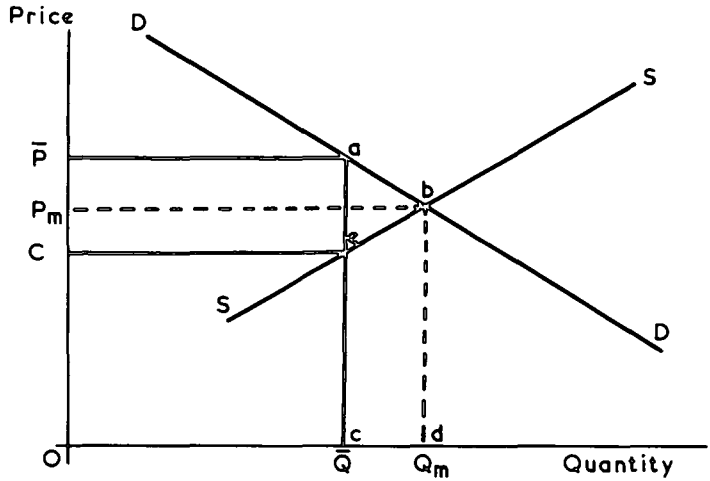

Figure 1

The introduction of a quota system to attain the higher price $\bar{P}$ will increase or decrease total returns to producers according to whether demand is inelastic or elastic. The distribution of income will change, however, since the coupons will now be valuable and will receive a sizeable share of the income. The demand for the conventional factors will be reduced and their prices will fall as dictated by their respective supply curves to this sector. The effect on these factors will be the same as if the commodity price were to fall to C since producers are willing to produce the quantity $\bar{Q}$ at that price. They

5 In the case of an intermediate product such as sugarcane, which must be further processed into the final product, sugar, the demand curve is a 'derived' demand curve.

6 The very short-run supply curve, say, within a crop year, is not relevant in the case of production certainty. The idea will be introduced in the following section.

will bid up the price of the coupons to P-C for each coupon unit.

Production at $\overline{Q}$ will be undertaken at minimum cost (factor prices will be equal to the value of marginal products net of the coupon price) and will be efficient in that sense. The economy does experience a loss because it places a higher total value on the units of commodity not produced, $\overline{Q}$-Q_m, (represented in Figure 1 by the area under the demand curve acdb) than it places on the alternative product produced by the resources shifted out of the production of this commodity (the area ecdb). The net welfare loss then is the triangle aeb in Figure 1. The size of this welfare loss (and the coupon price) is affected by the slopes of the demand and supply curves and the extent to which the price, $\overline{P}$, is increased above the market price.[7]

This treatment assumes that the resources released from the production of this commodity will be mobile and under conditions of competition will produce other goods valued at their resource costs. Insofar as these resources are receiving rents or quasi-rents in the producing sector the loss of these rents should be added to the net welfare loss to the economy. These losses are probably more important from an income distribution point of view. The imposition of a quota system intensifies resource adjustment difficulties from a factor market point of view. Factors least elastic in supply to this sector will experience the greatest decline in price. If the quota system is imposed on a large sector of the agricultural economy, land prices are likely to fall most. On the other hand, for a single crop, labor in a particular region may be less elastic in supply than land. Of course, to the extent that factors are capital items, including human skills, these lowered prices reflect real capital losses in the form of reduced rents.

For an individual producer, the reduced demand for conventional factors that he owns may be more than offset by the rents accruing to quotas which he comes to own. The manner in which the ownership of these quotas is granted then becomes an important determinant of the net distributional effects of the system. Since the value of the quota is the capitalized value of the expected stream of future coupon values and because the recipients are determined at the initiation of the system, it is more appropriate to treat them as wealth transfers rather than income transfers. As such, they lack some of the properties of an income distribution mechanism. Flexibility to monitor and change eligibility requirements over time is lost, for example. The quotas become items of property and tend to receive political treatment accordingly. Since they generally redistribute wealth (or income) in direct proportion to some historical production base, their net effect is usually quite regressive.[8]

7 A more formal treatment of the measurement of the welfare loss can be found in Harberger [2]. Specific discussions of quota systems are undertaken in Johnson [3], Wallace [5], and Welch [6].

8 Experience in the United States with similar wealth transfer in the form of television licenses and other government permits of various kinds would seem to indicate that public legislative and administrative bodies are far less capable of preventing abuses and controlling the level of the transfer in these forms than they are with more direct income transfers through social security and other such welfare measures.

Production Uncertainty–Perishable Commodities

Agricultural crop production is generally subject to a considerable amount of uncertainty. The most important factors responsible for this are weather phenomenon which are beyond the control of the producer. Of course, many modifications in production plans are made by farmers in response to weather factors, and some contingency investments such as supplementary irrigation systems are possible. Generally, for a given commitment of resources or inputs, crop output will be stochastic, that is, a random variable with a given distribution. Gustafson [1] presents evidence that the distribution of most crop yields over time under experimental conditions is skewed to the right. Very low yields relative to the mean are more likely to occur than very high yields.[9]

The bulk of the input resources are committed to the production of the crop at the beginning of the producing season. This commitment basically determines expected output as measured by the mean of the output distribution. The relationship of the output distribution of all producers to $\overline{Q}$, the announced total coupon quantity, is of interest since this will allow a calculation of the amount of the crop that will be produced but cannot be marketed. The basis for establishing this relationship can be found in the market for coupons.

Prior to the production season, coupon prices will be based on the difference between expected commodity price and marginal cost or supply price of production at the announced total coupon quantity, $\overline{Q}$. (The expected price, P_C will be higher in this case than $\overline{P}$, the demand price for the quantity $\overline{Q}$, as shown below.) At the end of the producing season, when actual output is known, the price of these coupons must necessarily be different. If actual production is less than $\overline{Q}$, the coupons (which we assume cannot be used in the following period) are superabundant and their price will fall to zero. On the other hand, if actual production exceeds $\overline{Q}$, the short run price of the coupon will be bid up to a price $\overline{P}$-N, where N represents the value of the commodity outside the market.[10] Since output is a random variable, the case where actual output equals $\overline{Q}$ can be ignored. Of course during the producing season the price of the coupons may vary between these extremes as information changes output expectations.

It is impossible for producers to avoid becoming speculators in this market as long as they cannot predict their own output. They will either have an excess or shortage of coupons at the end of the season and the price will be either zero or $\overline{P}$-N. It is not necessary for all, or even any, producers to behave

9 In a market situation commodity prices will also be stochastic. In most storable commodities the variance in prices is sufficient to encourage storage from period to period. Of course, instability in producers' decisions can add to the variance of output and prices. The well-known Cobweb Theorem is a case in point. Since this instability is effectively eliminated by quota systems we will not deal with it.

10 This may reflect savings from not harvesting the crop as well as the value of the crop as fertilizer. In the case of a crop like sugarcane it may be possible to delay harvest of the crop until the following production period, but in many areas frost damage prevents this.

like speculators to reach a definable price and quantity solution. Non-producer speculators can trade coupons and quotas in such a way as to achieve the expected result. The solution will be such that the expected returns from holding coupons for speculative purposes will be equal to the returns derived from holding coupons as a right to produce, ignoring possible risk premiums or discounts. Market forces will tend to make this relationship hold in the long run.

If we define α as the probability that total actual production will exceed $\overline{Q}$, total coupon quantity, the following relationship will hold.

(1) $(1-\alpha)(0) + \alpha(\overline{P}-N) = P_e - C_r$ or:

(2) $\alpha = (P_e - C_r)/(\overline{P}-N)$

The elements of this relationship can be defined with reference to Figure 2. Suppose the supply and demand curves and $\overline{Q}$ and $\overline{P}$ are as defined in Figure 1.

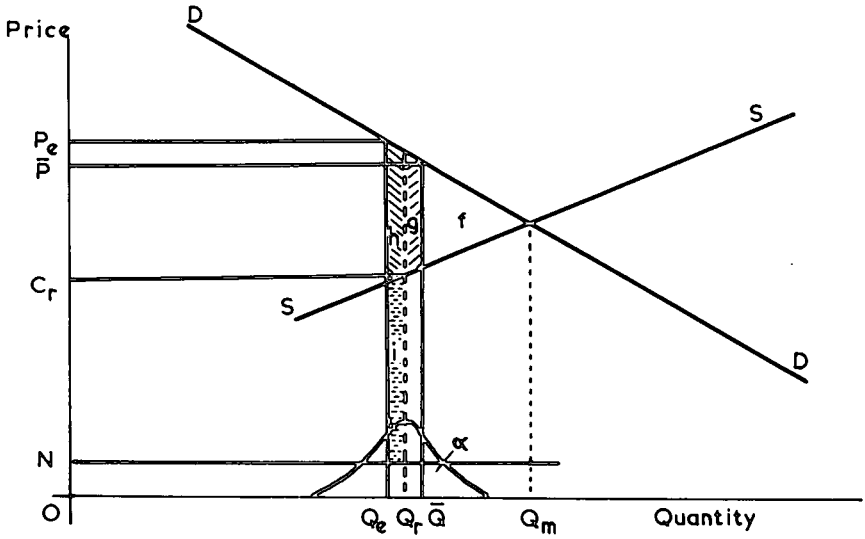

Figure 2

The frequency distribution at the base of the diagram represents the 'a priori' output distribution associated with the commitment of resources, Q_r, at a marginal or supply cost, C_r. Note that Q_r, the mean of the output distribution, is equal to $\overline{Q}$ only if $\alpha = ½$. The long-run or expected value of the coupon will be P_e-C_r. Commodity price will be higher than $\overline{P}$ in those periods when actual production is less than $\overline{Q}$ and it will be $\overline{P}$ when production exceeds $\overline{Q}$. The expected price, P_e, will be the price of the expected quantity actually placed on the market. Expected marketed quantity is the mean of the portion of the distribution on the left of $\overline{Q}$, the portion to the right being represented by α.

Reference to equation 2 defining α and to Figure 2 will show that for given demand and supply conditions, as $\overline{Q}$ is changed, α will change in the opposite direction. For example, if $\overline{Q}$ is increased, the numerator of equation 2, P_e-C_r, falls faster than $\overline{P}$-N as long as the supply curve is upward sloping and α will decrease.[11] Note, however, that $\overline{Q}$ must be increased beyond Q_m, the market clearing quantity, before P_e-C_r goes to zero and the quota system becomes ineffective. As $\overline{Q}$ is decreased α increases and is less than one as long as C_r is greater than N, the non-market alternative for the crop.

It is possible to identify the additonal welfare costs due to the introduction of uncertainty in Figure 2. The triangle f is the same area identified in Figure 1 (aeb). Three additional components of welfare loss can be identified. The first is the area g which is simply an enlargement of the area f because expected production is only Q_r instead of $\overline{Q}$. The second, the area h, measures the further loss because expected product placed on the market is Q_e. The quantity Q_r-Q_c (actual output in excess of $\overline{Q}$) is produced but not marketed. Resources used in this production cannot be used in alternative production and their wastage is the third added element of welfare loss, measured by the area i.[12]

If the governing authority wished to achieve an expected price P_c equal to $\overline{P}$ in our example, it would choose a coupon quantity, $\overline{Q}'$. Perhaps a more relevant welfare comparison is possible under these conditions. The total area f'+g'+h' will now equal the original welfare loss in Figure 1 and only the area i' will be the added welfare loss due to uncertainty.

Production Uncertainty, Perishability and Coupon Carryforward

An obvious modification to a quota system for a perishable commodity produced under uncertainty is to allow coupons to be valid in future periods, once issued. Producers (and speculators) could then choose to carry coupons forward to be used in the following year to market possible commodity quantities produced in excess of coupon quantities in that year. In long run equilibrium a stable inventory of coupons will be carried forward and producers will base their production decisions on this inventory level as well as on the announced coupon quantity, $\overline{Q}$. Actual commodity price will fluctuate, and $\overline{P}$ will no longer be a price floor since producers may decide to sell more than the total $\overline{Q}$ in a given period by using their coupon inventory (as might occur with several consecutive years of higher than average production).

11 It would be quite unusual for C_r to be less than N, except in the case where home consumption was important.

12 A further small loss results from the fact that with a downward sloping demand curve and uncertainty the expected losses in consumer value are higher than indicated by the areas because the loss in consumer value is greater for negative deviations from expected marketings, Q_r, than for positive deviations.
That is,

$$\int_0^{Q_e} h(q)\, f(q)\, dq < P_e \int_0^{Q_e} f(q)\, dq, \text{ where}$$

P = h(q) is the demand function and f(q) the frequency distribution of output.

The long run equilibrium will have the features exhibited in Figure 3. Since a stable inventory of coupons will be maintained (it cannot grow without limit) expected marketed quantity must be equal to $\overline{Q}$, the annual total coupon quantity (assumed to be constant). Actual resource commitment, Q_r, the mean of the output distribution, (actually the mean of the means of different output distributions each period since producers take inventories into account in determining them) will be greater than $\overline{Q}$ as long as some cases occur where production exceeds $\overline{Q}$ plus coupon inventory. In this case a fraction, γ, of actual output cannot be marketed and will be wasted.

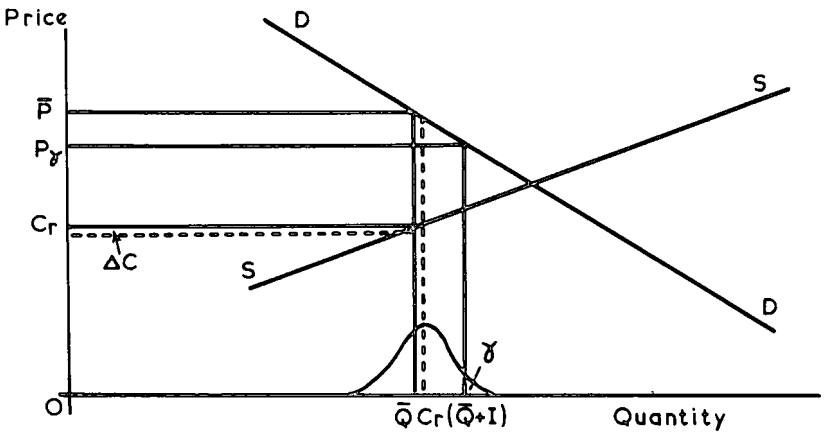

Figure 3

The (average) short run coupon price will be $(\overline{P}\text{-}C_r)/(1+r) = (\overline{P}\text{-}C_r)^*$ as long as production does not exceed coupon supply, $\overline{Q}$, plus inventory. This is so because marginal coupons will have to be carried forward and will be worth their long run expected value discounted one year. In the case where actual production exceeds $\overline{Q}$ plus coupon inventory (with probability γ,) the price will be $P\gamma$ -N. We then have:

(3) $\gamma(P\gamma\text{-}N) + (1\text{-}\gamma)\,(\overline{P}\text{-}C_r)^* = \overline{P}\text{-}C_r$ or:

(4) $\gamma = ((\overline{P}\text{-}C_r) - (\overline{P}\text{-}C_r)^*)/((P\gamma\text{ -}N) - (\overline{P}\text{-}C_r)^*)$

A comparison of equations 2 and 4 shows that γ is less than α as long as the interest rate is finite and the two parameters converge as the interest rate goes to infinity as expected. Thus welfare losses are always less when coupons are allowed to be carried forward since no social costs are involved in maintaining the inventory of coupons, even though there are private costs.

(Equilibrium inventory, I, in Figure 3, is determined by $\overline{Q}$ and equation 4. Q_r-$\overline{Q}$ is the expected resource wastage due to non-marketed production.)[13]

Production Uncertainty and Commodity Storage

Commodity storage is possible with almost all commodities but is not always economical if storage costs are too high. In this section a quota system with storage at economical costs is considered. Coupons cannot be carried forward. Unlike previous cases, production in excess of $\overline{Q}$ need never be wasted since it can be stored to be delivered on the next period's coupons. An equilibrium storage level will exist in the sense that, while it will fluctuate from year to year, it cannot grow without limit.

In this analysis we concentrate on the probability, $1\text{-}\beta$, that actual production plus commodity carryover will be less than $\overline{Q}$. In such an instance the coupon will bear a price of zero. Yet because of storage costs producers will not produce such that $1\text{-}\beta = 0$.

The price of the coupon in the case where total supply (production plus carryover) exceeds $\overline{Q}$ is determined by the premium that holders of inventory are willing to pay to sell a unit of the commodity now rather than carry it forward another period. This premium will be made up of storage costs saved (S) (including shrinkage and insect damage; assumed to be a constant cost per unit in this example) plus the gain from selling the commodity in this period (for $\overline{P}$) instead of waiting until next period to sell it for the expected price, P_e ($P_e = \overline{P} + \Delta P$, where $\Delta P = (Q_r\text{-}\overline{Q})\overline{P}/\eta\overline{Q}$; η is the elasticity of demand). A reduction in inventory will also allow the increase of production in the

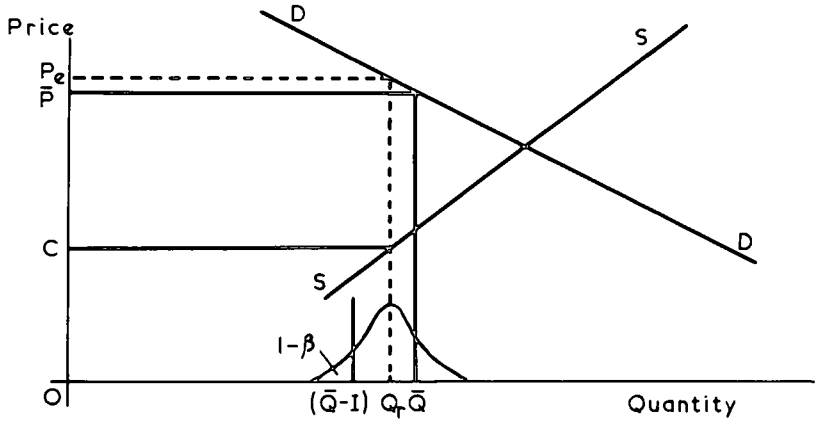

Figure 4

13 A minor modification to equations 3 and 4 is required because of rising linear marginal costs. A term, ΔC, should be subtracted from the denominator making γ slightly larger. This term allows for the fact that the periods following negative deviations in output, resource commitment is greater than average and marginal cost higher. Of course the reverse is also true and with a symmetric output distribution these would cancel out with a linear marginal cost function except that some product is wasted. The difference between marginal costs at $\overline{Q}$ and $\overline{Q}_r$ is the ΔC term It of course goes to zero as γ goes to zero.

coming period and the earning of P_e-C, the long run value of the coupon. The expected coupon price will then be $\overline{P}$-Pe/(1+r) + (P_e-C)/(1+r) + S or $\overline{P}$- 0* + S. β is determined by:

(5) $(1-\beta)(0) + \beta(\overline{P}-C^*) + S = P_e-C$

(6) $\beta = (P_e-C)((\overline{P}-C^*) + S)=(\overline{P}\,(1-(Q_r-\overline{Q})/\eta\overline{Q})\,-C)/((\overline{P}-C^*) + S)$

Figure 4 portrays the essential features of the relationship. Resource commitment Q_r is less than $\overline{Q}$ because actual production plus carryover is less than $\overline{Q}$ with a probability $1-\beta$. Long run equilibrium inventory (I) is determined by $\overline{Q}$, the output distribution and β. We note from equation 6 that $1-\beta$ is smaller (and equilibrium inventory larger) the larger is P_e-C, the long run coupon price; the higher the discount rate and the lower are storage costs. It is also smaller the greater is the elasticity of demand and the slope of the supply curve.[14]

Welfare losses in addition to the standard loss depicted in Figure 1 depend entirely on the relationship between storage costs with and without the quota system.[15] Welch [6] has shown that a quota system under production uncertainty will lead to storage and storage costs in a case where price variance is not great enough to lead to storage in a free market. It does not follow, however, that the quota system will have higher storage costs than an optimal market system under all conditions.

Gustafson [1] has derived sets of optimum carryover storage rules for a market system subject to production uncertainty. For given values of the discount rate, storage costs, the elasticity of demand and the standard deviation of the output distribution, optimum carryover is determined. He shows that optimal equilibrium carryover in a market system is higher the more inelastic the demand function, the lower the discount rate, the lower storage costs and the higher the output variance. He also shows that an increase in output variance has a larger effect on carryover, the lower storage costs and the lower the discount rate. Examination of Figure 4 and equation 6 will reveal that the direction of the effects of these variables on equilibrium storage with a quota system is the same.

With a market system, no storage is generated below some minimum output variance level. With a quota system equilibrium inventory increases in proportion to the standard deviation of the output distribution. Thus at low levels of output variance the quota system generates higher storage costs than optimal. Gustafson also shows that for low storage rates and discount rates, optimal storage in a market system will increase more than proportionately to the standard deviations of output.[16] Thus it is possible for the quota system to generate an 'optimum' carryover equivalent to that generated in an optimal

14 In any given year, with rising marginal costs, an additional term will be reflected in coupon prices. The term C-)I-I^1)c/ϵ $\overline{Q}$ should be added to the numerator of 6 (where (I-I^1) is the deviation from equilibrium inventory and ϵ the elasticity of supply) to account for changing production costs in the next period. Since its expected value is zero it is not included in 6 which describes the long run relationship.

15 Except for the minor costs indicated in footnote 12.

16 See Gustafson [1] pages 30-31 and compare storage rules 4 and 10 in Table 1 for a specific example.

market system. Likewise it may produce less than optimal carryover, but with normal discount and storage rates the quota system would involve more storage costs than an optimal market system.

Summary and Conclusions

This discussion has not considered all possible forms that quota systems can take, nor has it considered all the economic implications.[17] A brief discussion of income distribution effects has been undertaken, but principal attention has been given to the welfare losses associated with quota systems. Table 1 presents some illustrative calculations of welfare losses as a per cent of the value of the commodity under specified conditions.

TABLE 1. *Welfare Costs as a Per Cent of Market Value Under Alternative Quota Systems, Standard Deviation of Output Distributions and Demand Elasticities*

Policy Situation	$\sigma = 0$		$\sigma = .10$		$\sigma = .20$	
	$\eta = -1$	$\eta = -1/4$	$\eta = -1$	$\eta = -1/4$	$\eta = -1$	$\eta = -1/4$
Non-Storable Commodity	.09	.009	.1045	.0287	.1133	.0297
Coupon Carryforward	.09	.009	.0940	.0195	.0958	.0290
Storable Commodity	.09	.009	.0945	.0165	.0990	.0240

Assumptions: $P_m = \$1.00, \bar{P} = \$1.15$

Elasticity of Supply = 1.0

$r = .10, N = .15, S = .10$

These calculations are based on the achievement of a price 15 per cent higher than the market price. For simplicity the output distribution is assumed to be uniform. The case where $\sigma = 0$ is the production certainty case. The standard deviations of .10 and .20 are 10 and 20 per cent of $\bar{Q}$ which is normalized to equal 1 in the example. In this example the elasticity of demand affects the original welfare costs greatly. However, even with inelastic demand the welfare costs become quite substantial under production uncertainty. The superiority of the coupon carryforward policy is apparent. Storage costs in an optimal market situation are not netted out of the storate calculations in the table.

17 Space has not permitted a treatment of black market incentives which become very high under conditions of non-storability of the commodity. The short run price of the coupon is a measure of the incentives to circumvent the system and market the commodity without coupons. If a black market price is available it becomes the non-market alternative for the commodity and the parameter in equation 2 will be larger and for given $\bar{Q}$, welfare losses lower. This does not take into account enforcement costs which may be quite high. These enforcement costs are generally likely to be higher under production uncertainty and under certainty because the coupon prices will be higher part of the time. These costs should be added to the welfare losses.

An Evaluation of Agricultural Price Policies for Selected Food Products: Brazil

EUTER PANIAGO* and G. EDWARD SCHUH**

Some form of price policy is frequently recommended as one means of stimulating agricultural development in developing countries. The basis for this recommendation is generally a recognition of the need for price incentives if satisfactory output levels are to be maintained, and a recognition of the role that price incentives can play in speeding up the rate of adoption of new or modern inputs, which in turn raise the level of factor productivity in the agricultural sector.

However, price policies which set prices at other than equilibrium levels incur social costs as well as budgetary or treasury costs. The magnitude of the costs depends on the demand and supply elasticities, as well as the degree of divergence of the price from what would obtain in a competitive market. For this reason the choice of policy depends in part on empirical knowledge of the demand and supply elasticities.

The present paper reports some of the findings from a study[1] which had as its primary objective the evaluation of alternative price policies for three important food products in Brazil. In the interest of brevity the paper will present and discuss only the estimates of the treasury and social costs. The econometric research on which the results are based may be found in the original study.

The Policies and Products Studied

The general objective of the study was to evaluate three alternative price policies which might be implemented in Brazil: (a) a production quota policy, in which the price of the product is set above the equilibrium price and the quantity demanded at that price is rationed to producers through marketing or production quotas; (b) a price subsidy policy, in which the price of the product is set above the equilibrium price, but consumers pay prices consistent with demand at the new output and an income transfer is used to make up the difference to the farmers; and (c) a dumping policy, in which the price of the product is set above the equilibrium level, which the consumers pay, but stocks are acquired by the government and disposed of either through welfare programs or on the external market.

Products selected for study were rice, beans, and corn, three important food items in the Brazilian diet, and for which price policies have been in force. Since these products have quite different demand and supply conditions, the social costs of the various policies should be different.

* Euter Paniago is assistant professor of agricultural economics, Instituto de Economia Rural, Universidade Federal de Vicosa, Brazil.
**G. Edward Schuh is professor of agricultural economics, Purdue University, and Program Advisor in Agriculture, The Ford Foundation.

1 Paniago, Euter, "An Evaluation of Agricultural Price Policies for Selected Food Products: Brazil", unpublished Ph.D. thesis, Purdue University, 1969.

Estimates of the Treasury and Social Costs

The evaluation of the alternative price policies will be made on a product-by-product basis. The general findings will be summarized in the last section of the paper.

Rice

In order to evaluate the social costs of the alternative programs, average production (consumption) and price data for the period 1961–66 were chosen as a base. The analysis was made assuming that the alternative policies raised the price 10 per cent above equilibrium. Since the estimated equations were all constant elasticity functions, the base data could be used as a point of departure.

The results are presented in Table 1, and are calculated from equations presented in the appendix. In order to provide an estimate of the relative orders of magnitude involved, the social costs are also expressed as a fraction of the value of the 1966 rice crop.

TABLE 1 *Estimates of Social Cost for Alternative Price Policies, Rice, Based on 1961–66 Mean Data, Brazil*

Policy	Social Costs in Thousands of Cruzeiros of 1966 Value	Social Costs Expressed as Percentage of the 1966 Value of Rice Production
Quotas	692,221	.08
Subsidy	6,017,301	.70
Dumping	2,040,875	.24

The results indicate that the social costs of the price subsidy policy would be the highest, those for the production quotas the lowest, and those for the dumping policy intermediate between the two. This ranking is a function of the relative elasticities of supply and demand with respect to price. For example, the social costs of the production quota policy are low because the price elasticity of demand for rice is relatively low. A 10 per cent increase in price can be obtained with a relatively small reduction in supply, since consumers are relatively insensitive to price changes.

On the other hand, the social costs of the price subsidy plan are high because the supply elasticity is relatively large and the demand elasticity relatively low. The increase in the price of rice leads to a relatively large increase in the production of rice–a diversion of resources away from the production of goods the society would want if there were no government interventions in the market.

Social costs for the dumping policy are a direct function of the demand and supply elasticities. Since one of these is low while the other is relatively large, the social costs are intermediate between those for the other two policies.

Further insight into the size of the social costs incurred to obtain given policy objectives can be had by calculating the price increase necessary to

obtain a 10 per cent increase in revenue to farm producers[2]. The price increases necessary are 11.3 per cent for the production quota policy, and 7.6 per cent for each of the other two policies. Hence, when considering both of these aspects, it appears that the social costs for a 10 per cent increase in revenue to the rice sector would still be less for the production quota policy, and highest for the price subsidy policy.

The several policies examined incur quite different budget or treasury costs to the government. Gross budget costs for the dumping policy involve the acquisition of stocks in order to maintain the price above the free market equilibrium level. This can be estimated by determining the quantity demanded at the higher price, as well as the quantity supplied, and computing the cost of buying these stocks at the higher price level. This will tend to be an over-estimate of the net budget costs, since some portion of them can be dumped abroad, if even at lower prices, or used in domestic programs of various kinds. No estimate of net costs can be made unless the disposal policy is specified.

The budget costs for the price subsidy policy involve primarily the income transfer payments to make up the difference between the support price and the price actually realised in the market. This can be estimated by determining the quantity supplied at the higher price, inserting this into the demand equation (normalized on price) to determine what price would clear the market, and then multiplying the price differential by the quantity produced.

Estimates of the gross budget costs for the price subsidy and dumping policies are presented in Table 2. Once again the price subsidy incurs the largest costs. The budget or treasury costs would amount to some 34 per cent of the value of the crop for 1966, as contrasted to only slightly over five per cent for the dumping policy. The large budget costs for the price subsidy policy are a result of the low demand elasticity and the relatively high supply elasticity.

TABLE 2 *Budget Costs for a Dumping Policy and a Price Subsidy Policy for Rice in Brazil.*

Costs	Dumping	Price Subsidy
Budget Cost	44,958,819	292,420,082
Percent Cost of Value of Production	5.20	33.79

Beans

Estimates of the social costs for the alternative policies applied to beans are presented in Table 3. Similar procedures were used as for the case of rice. The only difference was that two alternative estimates of the elasticity of supply were used. The estimates in the upper part of the table are made assuming that the elasticity of supply with respect to the price of beans is the same as the elasticity of supply with respect to the complementary product, corn. In the lower half of the table the estimated (non-significant) elasticity with respect to the price of beans was used.

2 See appendix for formula.

In the case of beans the results indicate that the production quotas policy would have a higher social cost than either the price subsidy policy or the dumping policy. This is a result of the relatively low supply elasticity, and the somewhat higher price elasticity of demand. The influence of the low supply elasticity can be seen in comparing the upper and lower parts of the table. When the supply elasticity approached zero, the social costs for the production quota policy became relatively large.

The reversal of rankings is completed in the sense that the price subsidy policy incurs the lowest social costs for beans. The dumping policy remains intermediate between the two.

It should be noted in passing that the ranking of the social costs is not altered by the alternative supply elasticities, although the relative magnitude of the social costs is. The lower supply elasticity makes the social costs much greater for the quota policy, and at the same time makes the social costs of the price subsidy policy much lower.

TABLE 3 *Estimates of Social Costs for Alternative Price Policies, Beans, Based on 1961–66 Mean Data, Brazil.*

Policy	Social Costs in Thousands of Cruzeiros of 1966 Value	Social Costs Expressed as Percentage of the 1966 Value of Beans Production
	(With price elasticity of supply of complementary crop)	
Quotas	2,493,749	.43
Subsidy	594,383	.10
Dumping	1,217,476	.21
	(With own price elasticity of supply)	
Quotas	26,178,523	4.53
Subsidy	27,242	.005
Dumping	844,468	.15

The per cent increase in price necessary to increase revenue by 10 per cent has the same ordering as for rice. The production quota policy requires the largest increase, while the other two require somewhat less. This ordering is based on the fact that the revenue has to come from a smaller amount of production in the case of the production quota policy.

The gross budget costs for the dumping and price subsidy policies are presented in Table 4. Once again these are estimated using the alternative estimates of supply elasticity. The results indicate a larger budget cost for the dumping policy than for the price subsidy policy. These results are also reversed from what they were in the case of rice.

When the larger supply elasticity is used, there is not much difference in the budget costs between the two policies. However, when the low supply elasticity is used, the budget costs of the price subsidy policy decline substantially and become quite low.

In conclusion, the results by both criteria are directly opposite to what they were for rice. In the latter case, the price subsidy policy incurred the

largest social costs, and a relatively large budget cost. For beans, however, the social costs of the price subsidy policy are the smallest, and the budget costs are less for this policy, and in fact relatively small.

TABLE 4 *Budget Costs for a Dumping Policy and a Price Subsidy Policy for Beans in Brazil*

Costs	Dumping	Price Subsidy
	(With price elasticity of supply of complementary crop)	
Budget Cost	25,583,084	21,849,592
Per Cent Cost of Value of Production	4.43	3.78
	(With own price elasticity of supply)	
Budget Cost	18,192,415	125,582
Per Cent Cost of Value of Production	3.15	.22

Corn

Estimates of the social costs of the alternative policies are presented in Table 5. Given the estimated structure of the corn sector, it appears that a production quota policy would incur the largest social costs, while a price subsidy policy would incur the smallest social costs. Moreover, the social costs of the production quota policy are relatively large, whereas those for the price subsidy policy are relatively small.

The reason for this particular ranking is that the demand elasticity is relatively greater than the supply elasticity. Other things being equal, social costs for the production quota policy increase as the elasticity of the supply equation declines. Similarly, the social costs of the price subsidy policy decline as the demand elasticity increases. Hence, both characteristics operate to produce the ordering of social costs obtained.

The percentage increase in price necessary to increase revenue to the corn sector by 10 per cent was 17.3 per cent for the production quota policy, and 9.0 per cent for the other two policies. The relatively large increase in price for the production quota policy is due to the relatively large price elasticity of demand for corn. Hence, for corn, not only would the production quota policy incur the largest social costs per percentage increase in price of the product, but a larger price increase would be necessary to obtain a given income or revenue goal.

TABLE 5 *Estimates of Social Costs for Alternative Price Policies, Corn, Based on 1961–66 Mean Data, Brazil.*

Policy	Social Costs in Thousands of Cruzeiros of 1966 Value	Social Costs Expressed as Percentage of the 1966 Value of Corn Production
Quotas	16,931,702	2.09
Subsidy	644,055	.08
Dumping	3,304,244	.41

Gross budget costs for the price subsidy and dumping policies are presented in Table 6. The data indicate that the budget costs for the dumping policy are relatively larger, although where appropriate disposal policies followed, this cost could be reduced.

TABLE 6 *Budget Costs for a Dumping Policy and a Price Subsidy Policy for Corn in Brazil*

Costs	Dumping	Price Subsidy
Budget Cost	73,069,370	15,833,093
Per Cent Cost of Value of Production	9.01	1.95

Conclusions

A definitive conclusion as to which policy would be best, given that the government decides to have a price support policy, is not possible. In the first place, a final decision involves political considerations, as well as some notion of the practical feasibility of administering the programs. No attempt was made to estimate the administrative costs of the programs, nor to evaluate the feasibility of implementing them.

Equally as important, however, is the finding that no one policy comes off uniformly best when evaluated in terms of social costs or budget costs to the government. It turns out that which policy has the lowest social costs, or which has the lowest budget costs, depends on the magnitude of the respective demand and supply elasticities. Because of this, one policy will be 'best' for one product, and another will be 'best' for another. But this finding itself is important.

Another important finding of the study is that the magnitude of the social costs tends to be relatively low, for the products studied, as long as relative price increases are kept within the range of 10 per cent. In only two cases were the magnitude of the social costs greater than one per cent of the value of production for the crop in a base-year. In both cases these larger relative social costs occurred with the production quota policy—once when the relatively low supply elasticity for beans was used and again in the case of corn (Tables 3 and 5).

The budget or treasury costs of the alternative policies, however, turn out to be relatively large in some cases. For example, the budget cost of a price subsidy policy for rice is estimated to equal approximately 34 per cent of the value of rice production in a base-year. Similarly, the budget cost of the dumping policy for corn is estimated at approximately 9 per cent of the value of production in a base-year. More generally, however, these budget costs range between .22 per cent and 5.20 per cent of the value of the crop in a base-year, depending on the particular crop studied and the specific policy considered.

To make a final evaluation of the several price policies, they must be set in perspective with other policies which can obtain the same goal. For example, if the objective of the price policy is to raise farm prices in order to raise relative incomes in the farm sector, there are alternative ways of accomplish-

ing this. For example, other results in the study on which this paper is based indicate that had Brazil pursued a more rational policy in its export sector during the post-World War II period, with a reduction in the over-valuation of her currency and the elimination of export prohibitions for food products, the gains to the farm sector would have been fairly large. The domestic price of the products considered would have risen, farmers would have received a higher price for their product, a previous market distortion which increased social costs substantially would have been eliminated, and the country would have gained increased exchange earnings which would have alleviated its balance of payment problems.

Appendix

Measurement of Social Costs

$S(Q) = 1/2\, P_o\, Q_o\, r^2 n\, (1 + n/e)$

$C(S) = 1/2\, P_o\, Q_o\, r^2 e\, (1 + e/n)$

$S(D) = 1/2\, P_o\, Q_o\, r^2\, (n + e)$

where:

S(Q), C(S), and S(D) refer to social costs of the production quota, price subsidy, and dumping policies, respectively

P_oQ_o = value of output under competitive conditions

r^2 = square of the percentage increase in price over equilibrium price

n = price elasticity of demand

e = price elasticity of supply

Percentage Increase in Price, r, Necessary to Obtain K Percent Increase in Farm Revenue:

Production Quota Policy:

$$-nr^2 + (1 - n)\, r \approx K$$

Price Subsidy and Dumping Policies:

$$er^2 + (e + 1)\, r \approx K$$

The Impact of Food Aid on Commercial Food Export

PER PINSTRUP-ANDERSEN and LUTHER G. TWEETEN*

Nations which rely heavily on commercial exports of agricultural commodities have sometimes objected to concessional food exports under aid programs. They contend that the food aid replaces commercial imports and reduces world market prices. To determine if policies are needed to reduce or eliminate any such adverse effects, it is necessary to know the extent to which food aid actually replaces commercial imports by food aid recipients

*Per Pinstrup-Andersen is Agricultural Economist, Centro Internacional de Agricultura Tropical, CIAT, and Visiting Professor, Universidad del Valle, Colombia. Luther G. Tweeten is professor, Department of Agricultural Economics, Oklahoma State University, U.S.A.

Journal Article 1892 of the Agricultural Experiment Station, Oklahoma State University, Stillwater, Oklahoma.

and changes world market prices.

Knowledge of the relationship between food aid and commercial food imports is useful to the donor country to determine an optimum balance between commercial and concessional exports. To be able to manage wisely its balance of payments, the donor country should know how much foreign exchange is foregone by exporting food commodities through aid program rather than through commercial outlets.

Little quantitative information relating food aid and commercial imports of food commodities was available prior to this study. A recent study of the impact of PL 480 (the U.S. food aid) on the Indian economy concluded that, in the absence of PL 480, India would have increased commercial food imports. The additional imports 'would have been far short of the actual imports under PL 480,' [7, p.36]. In a study of the impact of PL 480 on the Israeli economy, it was estimated that approximately 73 per cent of the wheat imported under PL 480 during 1955–60 would have been imported commercialy in the absence of PL 480 [3, pp. 12,300 ff]. Other studies have discussed the impact of food aid on world market food prices [1,4]. The general conclusion from those studies is that exports under aid programs have an adverse effect on prices, but few attempts have been made to quantify the relationship.

This study is an attempt to bridge some gaps in our knowledge of the impact of food aid on commercial exports. More specifically, the major objectives of the study are:

(1) To develop a conceptual framework to estimate the impact of food aid on commercial exports and prices and to estimate the impact of the U.S. food aid by means of this framework for the three fiscal years 1964, 1965 and 1966.

(2) To develop a conceptual framework to estimate the export revenue foregone by the donor country by maintaining food aid programs and to estimate the export revenue foregone by the U.S. during the 1964–66 period.

To simplify the quantitative analysis which follows, it is assumed that a unique world market price exists for each commodity. Most food aid consists of stable commodities such as wheat, with small price differences and high rates of substitution among the various types of any one commodity. The market clearing price is defined in this study as the price that would occur in the world market if all food aid programs were discountinued and the food exported under these programs were added to the prevailing commercial world market supply. The procedure for estimating the market clearing price is illustrated in the Appendix.

To estimate the world market price, we need to determine the average rate of substitution of commercial import for food aid, i.e. the amount of commercial food import replaced by food aid.

COMMERCIAL IMPORTS REPLACED BY FOOD AID

Data Sources

The basic data were obtained from a mail survey conducted among 441

persons representing 14 countries. All countries which received one per cent or more of the total U.S. food aid during the 3 fiscal years, 1964, 1965, and 1966, were included in the sample provided that they had diplomatic relations with the United States at the time when the research was initiated. The survey countries received 70 per cent of the total U.S. food aid during 1964–66. The participating persons were chosen after consultation with a large number of individuals and agencies, some American and some representing the sample countries. We attempted to contact only individuals with a considerable knowledge on economic development and external economic assistance programs and needs. Of the 441 persons contacted, a partly or fully completed questionaire was received from 88. This yields an overall response rate of 20 per cent. If more than one individual at any one institution was contacted, a joint answer was usually obtained. Such an answer was recorded as one response only. Thus, the response rate was downward biased. The confidential nature of the survey precludes revealing names of the individuals who completed questionnaires. But as stated above, the individuals contacted were deemed to have competence in matters of economic development and external economic assistance programs. Of the 88 respondents, 72 were citizens of the countries surveyed and 16 were U.S. citizens. The U.S. citizens were foreign development experts with experience in the survey countries. Forty-six of the respondents were economists and/or political scientists, most affliated with universities. Seven of the foreign respondents were cabinet members and 8 were government officials.

There is some indication that the most knowledgeable individuals completed and returned the questionnaire—several questionnaires were returned with the statement that the person did not possess sufficient data or competence to complete it. Thus, a higher response rate might not have yielded data with a higher degree of reliability.

While shortcomings of the data suggest caution in interpreting the results, we believe the estimates to be useful. Furthermore, we are unaware of other comprehensive estimates of the rate of substitution between commercial import and food aid. Finally we are unaware of any alternative methodology that would offer more reliable estimates at a manageable cost in research funds, time and personnel. While these estimates are neither final nor exact and further refinements are desirable, the estimates do reflect the very *real views* of presumably informed foreigners and some Americans of the relation food aid and commercial food import by developing countries.[1]

Each survey participant was informed of the average annual quantity of wheat imported by his country under PL 480 during the period 1964–66. He was then presented four hypothetical situations in which the quantity of wheat imported under PL 480 was reduced by 25, 50, 75 and 100 per cent respectively. For each of the four alternative situations, he was asked to indicate the increase in commercial imports, if any, that he believed would have taken place during the period in question.

It was felt that more realistic answers could be obtained by using physical

1 For a more complete presentation of primary and secondary data sources and limitations, see Pinstrup-Andersen[6].

quantities of one commodity, wheat, rather than food in general. Since wheat constituted 58 per cent of all food aid in terms of value during the period 1964–66, it appears that estimates for wheat might be fairly representative of food in general.

The results

Average annual wheat imports under PL 480 during the period 1964–66 are shown in Table 1 for each of the survey countries. Only 12 of the 14 survey countries are included. Indonesia was left out because it imported little or no wheat under PL 480 1964–66. Yugoslavia was left out because no data could be obtained. The survey countries accounted 64 per cent of the total wheat shipments under PL 480 during the time period under consideration.

The average and marginal rate of substitution of commercial wheat import for PL 480 imports were estimated for each of the survey countries (Table 1). The average rate of substitution (ARS) indicates the amount of commercial import per unit of wheat imported under aid programs that would have taken place during 1964–66 in the absence of food aid programs. Hence, if no wheat had been available under food aid programs the survey countries would have imported 41 per cent of the wheat they receive as aid. The marginal rate of substitution indicates the amount that would have been imported if the wheat aid had been reduced by one unit. Hence, the last ton of wheat imported under PL 480 reduced commercial imports by .27 tons.

The effect of food aid on commercial food exports was estimated for various levels of food aid. Table 2 indicates the estimated increases in commercial wheat exports if the export under PL 480 had been reduced by certain amounts. A 25 per cent reduction in annual wheat exports under PL 480 was 2.40 million tons. The estimated increase in commercial sales, 0.75 million tons, that would have accompanied this reduction in PL 480 imports, was not large. But commercial exports would have increased an estimated 3.90 million tons annually if all PL 480 exports of 9.61 million tons annually had been terminated.

The amount of commercial wheat export replaced by each unit of wheat aid is increasing for increasing aid reduction up to 75 per cent reduction. However, beyond a reduction of 75 per cent the amount is slightly decreasing. It is likely that a reduction in PL 480 imports of 75 per cent would severely strain the ability of countries with a short supply of foreign currency to finance commercial imports. An additional reduction in PL 480 would have little effect on the quantity commercially imported due to lack of additional purchasing power in the international market.

THE ESTIMATED MARKET CLEARING PRICE

The market clearing price for wheat was estimated for four different levels of reductions in the quantity of wheat presently included in food aid

programs. The results are summarized in Table 3.[2]

The market clearing price was estimated on the basis of each of two alternative assumptions concerning the degree of substitution between wheat and feed grains in the world market. In one case, it was assumed that no substitution would take place between wheat and feed grains, whereas in the other case it was assumed that wheat and feed grains substituted one-to-one on a weight basis for price decreases below the prevailing feed grain prices. The latter assumption implies that wheat is a perfect substitute for feed grains, but that feed grains are not necessarily perfect substitutes for wheat. Under the latter assumption, the wheat price will never fall below the price of feed grains given sufficient time for adjustment. If the price of wheat dropped below the prevailing prices of feed grains, where the prices are determined on a weight basis, the quantities demanded of wheat and feed grains would adjust to a point where the price of wheat equals the price of feed grains.

The average export price of feed grains during 1964–66 was $53.42 per metric ton [cf. 11]. The price of wheat, equivalent to the feed grain price on a weight basis, was estimated to be $1.45 per bushel. Hence, for wheat prices above $1.45 per bushel, it is assumed that the substitution of wheat for feed grains is zero. However, if the wheat price drops below $1.45 per bushel, it was expected that the amount of wheat substituted for feed grains would be of a magnitude that would equate the wheat price and the price of feed grains.

As shown in Table 3 the reductions in the prevailing world market price of wheat necessary to reach the market clearing price if all the wheat exported under the provisions of the Public Law 480 during the period 1964–66 were transferred to the world market were estimated to be 40.6 per cent if no substitution between wheat and feed grains were assumed and 20.9 per cent if complete substitution of wheat for feed grains were assumed. The average export price of wheat and wheat flour in grain equivalent for the three year period 1964–66 was $1.68 per bushel [cf. 11]. Hence, the market clearing price for wheat was estimated to be $1.00 and $1.33 per bushel under each of the two assumptions respectively.

It appears unlikely that the export price of wheat would drop below that of feed grains under free market conditions. Wheat is considered superior of feed grains for human consumption in most countries and is a near perfect substitute for feed grains for many other purposes. Hence, the best estimates of the market clearing price of wheat are likely to be obtained under the assumption of perfect substitution.

The market clearing price is the expected world market price if the food aim programs were terminated and the aid commodities transferred to the commercial world market. However, what world market price might be expected if the aid commodities were kept off the world market? This price

2 The analysis summarized in Tables 3 and 4 is based on the following values of elasticities: Elasticity of export demand for U.S. wheat = -2.8 obtained from: Tweeten [9, p.360]; elasticity of export supply of U.S. wheat = .28, obtained from: Tweeten [8]. Elasticity of export supply of U.S. feed grains is assumed equal to that of wheat. The above elasticities are based on an intermediate run of approximately three years. The elasticities would be of smaller absolute magnitude in a shorter period for adjustment.

was estimated for the same four levels of reduction in wheat aid for the period 1964–66. The results are shown in Table 4.

It is estimated that if the quantity of wheat exported under PL 480 had been reduced by 25 per cent during 1964–66, world market prices for wheat would have increased by approximately 5 per cent given that the wheat diverted from aid programs was not placed on the world market. In the absence of U.S. wheat aid the world market price was estimated to be $2.15 per bushel or an increase of 28 per cent above the actual price during the period.

THE REVENUE FOREGONE

A procedure for estimating the export revenue foregone by the donor country by maintaining food aid programs is shown in the Appendix. The revenue foregone is expressed by the estimated increase in export revenues if the food presently included in aid programs were exported commercially and the aid programs terminated.

The estimated increase in export revenue per dollar of wheat transferred from aid programs to commercial export is shown in Table 5 for the four levels of reduction in wheat aid. The estimated marginal values refer to a marginal unit of 25 per cent of the total wheat aid.

The revenue foregone by the U.S. during 1964–66 by exporting wheat under aid provisions was estimated to be 62 cents per dollar's worth of wheat if no substitution were assumed and 86 cents if substitution were assumed. The revenue foregone per unit of aid was found to be greatest at the margin and falling as more wheat were transferred from aid programs to commercial export. If 25 per cent of the 1964–66 wheat aid were transferred to commercial export and assuming no institutional restrains on export prices, the export revenue was estimated to increase by $1.01 per dollar's worth of aid transferred, or 101 per cent of the face value of the aid. This means that the revenue foregone by maintaining the wheat aid beyond 75 per cent of the 1964–66 level was 101 per cent of the face value of the aid.

The revenue foregone by maintaining only 25 per cent of the wheat aid was estimated at $0.09 per dollar's worth of wheat if no substitution between wheat and feed grains were assumed and, more realistically, $0.66 if substitution were assumed.

If the commercial world market is the best alternative outlet for commodities exported under aid programs and if no payment is received from the aid recipients, the export revenue indicates the alternative cost of food aid. However, if the food aid is not given as outright grants, the cost of aid is given by the export revenue foregone less the present value of the payments received from aid recipients.

It was found that the present value of the payments obtained by the U.S. under 20 and 40-year dollar credit terms exceeded the export revenue foregone. Hence there is no real cost to the U.S. of maintaining food aid under these programs.[3]

3 See: Pinstrup-Andersen [6] for a complete discussion of the cost of U.S. food aid.

CONCLUSIONS

The presence of U.S. food aid programs reduced commercial food imports by the aid recipient countries. The reduction in commercial food imports was less than the actual amount of food aid received. The amount of commercial food import replaced by each unit of food aid declines as the food aid is expanded. Using the 1964–66 level of food aid, it was found that, on the average, each ton of wheat exported under U.S. aid programs replaced 0.41 tons of commercial imports. The commercial import replaced by the last ton of wheat aid was estimated to be 0.27 tons.

The impact of food aid on world market prices depends on the allocation of the commodities presently exported under aid programs in the absence of these programs. If the U.S. had chosen to sell the surplus wheat in the commercial world market instead of exporting it through aid programs, the world market price for wheat was estimated to have decreased by 21 per cent of the actual price. On the other hand, if the U.S. had not maintained aid programs in wheat and had allocated the surplus wheat to some outlet other than commercial export, the world market price would have been 28 per cent above what it actually was.

The latter finding refers to what food exporting countries complain about as the price depressing effect of food aid. It is questionable, however, whether the U.S. could find a feasible alternative outlet for the surplus commodities that are presently exported under aid programs.

The PL 480 was introduced primarily as an outlet for mounting stocks of surplus foods in the U.S. It is likely that had this massive food aid not been initiated in 1954, a considerable portion of the surplus commodities would have found its way into the commercial world market. It was not politically feasible to reduce production to a point where no surplus would forthcome, let alone to a point where the surplus on hand could be sold through ordinary channels. Neither was destruction a political feasible solution to the problem of surplus productive capacity in U.S. agriculture. It is important to keep this internal U.S. problem of surplus productive capacity in mind when analyzing the impact of U.S. food aid on the commercial food exports.

If the U.S. wheat aid was terminated and 40 per cent of the wheat was offered in the world market through ordinary commercial channels, the world market price would stay at the same level as if the aid programs were continued. However, if the U.S. could not find an alternative outlet for the last 60 per cent of the wheat, hence increased the world market supply, the world market price would fall. In this case the net effect of the aid programs is a higher world market price than without these programs.

It was not attempted in this study to determine which exporting countries might benefit from a termination of the U.S. food aid under the assumption that the U.S. would not merely transfer the aid commodities to the commercial world market. This, of course, would be determined partly by political decisions on the part of the importing countries and partly by transportation costs and other comparative advantages among the exporting countries.

We have been using the words 'aid' and 'commercial exports' as if they

were describing two completely different matters. This is not at all the case. As more emphasis is placed on food aid through dollar credit programs, the difference between aid and commercial export is merely the credit terms. It was found in this study that the present value of the payments received by the U.S. from export under these credit programs exceeded the export revenues that could have been obtained if the food had been exported through ordinary commercial exports. Hence, it is questionable whether export under these programs should be termed 'aid.'

In conclusion we reiterate certain limitations of this study. We have attempted to estimate the impact of food aid on commercial export by projecting what would happen to commercial exports and prices if the food aid programs were reduced or terminated. However, the world trade pattern that would develop after the termination of the aid programs might be quite different from the pattern that would have existed if the aid programs had not been introduced in the first place. It is likely that the developing countries would have placed more emphasis on domestic food production, resulting in less need for food import.

TABLE 1. *The Marginal and Average Rate of Substitution of Commercial Wheat Import for PL 480 Imports.*

Country	Average Annual Wheat Imports Under PL 480 1964–66	ARS	MRS
	(1,000 tons)		
India	5,839	0.217	0.073
Pakistan	1,396	0.715	0.426
Brazil	861	0.791	0.792
Korea	440	0.732	0.333
Turkey	283	0.389	0.175
China	228	0.482	0.527
Israel	186	0.774	0.713
Morocco	156	0.641	0.641
Chile	128	0.781	0.742
Colombia	82	0.744	0.571
Greece	3	0.000	0.000
Congo	3	1.000	1.000
Total	9,605		
Weighted average[1]		0.406	0.269

Source: See text.

1 The average is weighted by the quantities imported by each individual country. The negative sign is omitted from all rates of substitution.

The estimated rate of substitution between commercial import and food aid relies heavily on the judgment of the persons surveyed. Even though the persons were carefully selected on the basis on the expected knowledge in these matters, they can be in error. While clustering of individual estimates about the sample mean suggests considerable agreement, bias may be present. Nevertheless, we believe the estimates despite their shortcomings are useful, particularly in view of the absence of other comprehensive quantitative studies on the topic.

TABLE 2. *Increase in Commercial Export for Various Reductions in Wheat Aid 1964–66*

Reduction in Export Under PL 480		Increase in Commercial Export	Rate of Substitution
(%)	(1,000 tons)	(1,000 tons)	
25	2.401	749	0.312
50	4.802	1.705	0.355
75	7.203	3.011	0.418
100	9.605	3.898	0.406

Source: See text.

TABLE 3. *The Estimated Market Clearing Price for Wheat for Various Levels of Reduction in Wheat Aid Levels.*

Reduction in Total Wheat Aid	Reduction in Prevailing World Market Price		Market Clearing Price	
	No Substitution	Perfect Substitution[1]	No Substitution	Perfect Substitution
(Per cent)	(Per cent)		($ per bushel)	
25	11.7	11.7	1.48	1.48
30	13.9	13.9	1.45	1.45
50	22.0	16.1	1.31	1.41
75	29.8	18.3	1.13	1.37
100	40.6	20.9	1.00	1.33

Source: Basic coefficients derived from survey [6]. Data for commercial export and export under aid provisions used in the calculations are from USDA [11, p.6].

1 The estimates under perfect substitution are obtained by using a weighted average of the elasticities for wheat and feed grains below the price of $1.45 per bushel of wheat (see text) and by using the commercial export quantity of wheat and feed grains rather than wheat alone.

TABLE 4. *Estimated Effect of U.S. Wheat Aid on World Market Prices.* [1]

Reduction in Total Wheat Aid	Increase in Prevailing World Market Price	Estimated World Market Price [2]
(Per cent)	(Per cent)	($ per bushel)
25	4.8	1.76
50	11.4	1.88
75	20.9	2.03
100	28.0	2.15

Source: Survey data [6]

1 Assuming that the commodities removed from aid programs were not placed on the world market.
2 Given that the prevailing world market price was $1.68 per bushel.

TABLE 5. *Estimated Export Revenue Foregone in Per Cent of Face Value of Wheat Aid for Alternative Levels of Aid.*

Per Cent Reduction in Total Wheat Aid	No Substitution		Perfect Substitution	
	Average	Marginal	Average	Marginal
25	100.7	100.7	100.7	100.7
50	88.1	75.5	98.3	95.9
75	80.0	63.8	93.0	82.4
100	62.2	8.8	86.2	65.8

Source: Survey data [6].

References

1 Allen, G. R. *The Impact of Food Aid on Donor and Other Food Exporting Countries.* FAO, World Food Program Studies, No. 2, 1965.

2 Dovring, Folke. '*Aid by Dumping.*' International Development Review, Vol. X, No. 3, 1968, pp. 2-5.

3 Ginor, Fanny. *Uses of Agricultural Surpluses.* Bank of Israel, Research Department, Jerusalem, 1963.

4 Mortensen, Erik. 'The Competitor's Perspective.' *Journal of Farm Economics*, Vol. XLII, No. 5, 1960, pp.1052-1062.

5 Pincus, John A. 'The Cost of Foreign Aid.' *The Review of Economics and Statistics*, Vol. XLV, No. 4, 1963, pp. 360-367.

6 Pinstrup-Andersen, P. *The Role of Food, Feed and Fiber in Foreign Economic Assistance: Value, Cost and Efficiency.* (Unpublished Ph. D. Thesis, Oklahoma State University, 1969).

7 Rath, Nilakanth and V. S. Patvardhan, *Impact of Assistance under PL 480 on Indian Economy.* Gokhale Institute of Politics and Economics, Ponna 4, India, 1967.

8 Tweeten, Luther G. *Commodity Programs for Wheat.* Oklahoma State University, Experiment Station, Technical Bulletin T-118 (Stillwater, 1965).

9 Tweeten, Luther G. *The Demand for United States Farm Output.* Stanford, California: Food Research Institute Studies, Vol. VII, No. 3, 1967.
10 U.S. Department of Agriculture. *Agricultural Statistics.* (Washington, D. C., 1966).
11 U.S. Department of Agriculture. *12 Years of Achievement Under Public Law 480.* Washington, D.C.: U.S. Government Printing Office, 1967.

APPENDIX A

Conceptual Framework for estimating the Impact on the World Market Price

The market clearing price is defined in this study as the price that would occur in the world market if all food aid programs were discontinued and the food exported under these programs were added to the prevailing commercial world market supply.

D_1 and S_1 indicate a hypothetical commercial world market demand and supply curve, respectively, given the current level of food aid. The prevailing world market price is indicated by P_1. Now assume that all U.S. food aid programs were discontinued and all food previously exported under these programs was added to the world market supply. The new supply curve is given by S_2. Since the food aid to some extent substitutes for commercial demand, the discontinuation of the food aid programs causes world market demand by the developing countries to increase. However, the shift in the demand curve is likely to be less than the shift in the supply curve. The new demand curve is shown by D_2, and the market clearing price is indicated by P_2. If, on the other hand, the past food aid commodities were not placed on the commercial world market, the new world market price would be P_3.

The two demand curves are shown in Figure 1 as being parallel. This will be

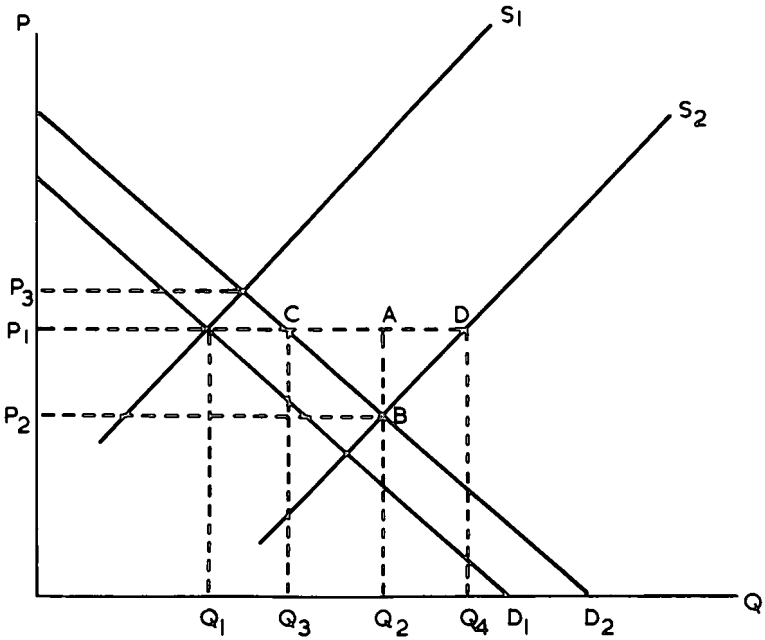

Figure 1 Illustration of Procedure to Estimate the Market Clearing Price

the case only if the additional commercial import demand brought about by discontinuation of the food aid is perfectly inelastic. If, as in the empirical analysis presented in this study, it is assumed that the elasticity related to the commercial import replaced by aid is equal to the elasticity of the prevailing commercial import, the slope of D_1 exceeds the slope of D_2. However, this does not affect the validity of the mathematical procedure outlined in the following.

In order to find P_2 and P_3 in Figure 1, it is sufficient to estimate the demand and supply elasticities and the magnitudes of the horizontal shifts in the supply and demand curves caused by a discontinuation of the food aid programs. The mathematical framework for estimating P_2 and P_3 is shown below.

The reduction in the prevailing world market price necessary to reach the market clearing price is given in Figure 1 by the distance AB. The distance CD equals the total amount of food sold under food aid programs ($Q_4 - Q_1$) less the amount of Commercial demand replaced by present food aid programs ($Q_3 - Q_1$). In other words, the distance CD measures the amount of present food aid that does not substitute for commercial imports.

Assuming straight line demand and supply curves, the elasticity of demand equals the inverse of the slope of the demand curve multiplied by the prevailing world market price divided by the quantity sold. Likewise, the elasticity of supply can be expressed as the inverse of the slope of the supply curve multiplied by the prevailing world market price divided by the quantity sold. Using the following notation:

E_D	=	price elasticity of export demand (expressed in absolute value)
E_S	=	price elasticity of export supply
$\left(\frac{dp}{dq}\right)_D$	=	slope of the demand curve (D_2 in Figure 1)
$\left(\frac{dp}{dq}\right)_S$	=	slope of the supply curve (S_2 in Figure 2)
P_1	=	prevailing world market price
P_2	=	market clearing price
Q_1	=	quantity initially exported commercially
Q_2	=	quantity exported commercially after termination of aid programs
$\Delta S = Q_4 - Q_1$	=	quantity exported under food aid provisions
ARS	=	average rate of substitution of commercial import for food aid
$\Delta D = Q_3 - Q_1$	=	ARS ΔS = increase in commercial import by aid recipients if U.S. aid programs are terminated

$CA = Q_2 - Q_3$

$AD = Q_4 - Q_2$

$AB = P_1 - P_2$,

the relationships mentioned above may be expressed in the following three equations:

$$CD = (Q_4 - Q_1) - (Q_3 - Q_1) = Q_4 - Q_3 \tag{1}$$

$$E_D = \left(\frac{dq}{dp}\right)_D \frac{P_1}{Q_1} = \frac{1}{\left(\frac{dp}{dq}\right)_D} \frac{P_1}{Q_1} \tag{2}$$

$$E_S = \left(\frac{dq}{dp}\right)_S \frac{P_1}{Q_1} = \frac{1}{\left(\frac{dp}{dq}\right)_S} = \frac{P_1}{Q_1} \tag{3}$$

but $\left(\frac{dp}{dq}\right)_D = \frac{AB}{CA}$; $\left(\frac{dp}{dq}\right)_S = \frac{AB}{AD}$;

and $CD = CA + AD$.

Solving (2), (3) and (4) for AB yields

$$AB = \frac{CA}{E_D}\frac{P_1}{Q_1} \; ; \; AB = \frac{AD}{E_S}\frac{P_1}{Q_1} \tag{5}$$

hence $CA = \frac{E_D}{E_S} AD$

but $AD = CD - CA$.

So $CA = \frac{E_D}{E_S}(CD - CA)$

$$= \frac{\frac{E_D}{E_S} CD}{1 + \frac{E_D}{E_S}} = \frac{CD}{\frac{E_S}{E_D} + 1}$$

From (5) one obtains

$$AB = CA \left(\frac{dp}{dq}\right)_D = \frac{1}{E_D} \frac{P_1}{Q_1} CA$$

$$= \frac{CDP_1}{\left(\frac{E_S + 1}{E_D}\right) E_D Q_1} = \frac{CDP_1}{\left(E_S + E_D\right) Q_1}$$

but $CD = \Delta S - \Delta D$

and $P_2 = P_1 - AB$

therefore, $P_2 = P_1 - \frac{(\Delta S - \Delta D) P_1}{(E_S + E_D) Q_1}$

$$= P_1 \left(1 - \frac{\Delta_S - \Delta_D}{(E_S + E_D) Q_1}\right)$$

but $\Delta D = ARS \cdot \Delta S$, since ARS is defined as the change in commercial import demand per unit change in food aid

So $P_2 = P_1 \left(1 - \frac{(1 - ARS) \Delta S}{(E_S + E_D) Q_1}\right)$

Using a similar procedure, the world market price that would occur if all food aid programs were terminated and the aid commodities were not transferred to the commercial world market may be estimated as:

$$P_3 = P_1 \left(1 + \frac{ARS \cdot \Delta S}{(E_S - E_D) Q_1}\right)$$

APPENDIX B

Conceptual Framework for Estimating the Export Revenue Foregone

Assuming that the world market is the best alternative outlet for surplus food, the estimated increase in total export revenue per dollar's worth of food aid transferred from aid programs to commercial export indicates the revenue foregone by the donor country per dollar's worth of food aid.

A procedure for estimating the increase in total export revenue per dollar's

worth of food aid transferred into commercial export is suggested below. The procedure is based on the estimated market clearing price as previously defined. In addition to the previous notation, the following notation is used:

$TER_1 = Q_1P_1 =$ total export revenue obtained from initial commercial export

$TER_2 = Q_2P_2 =$ total export revenue obtained if all food, presently exported under food aid provisions were exported commercially

$\Delta TER = TER_2 - TER_1 =$ the change in total export revenue

$\Delta ER = \Delta TER/\Delta S =$ the change in total export revenue per dollar's worth of food aid transferred

The revenue foregone per dollar's worth of food aid is given by:

$$\Delta Er = \Delta TER/\Delta S = (TER_2 - TER_1)/\Delta S = (Q_2P_2 - Q_1P_1)/\Delta S$$

but $Q_2 = Q_1 + \Delta S - AD$

where $AD = CD - AC$

$$= (\Delta S - \Delta D) - (\Delta S - \Delta D)/[(E_S/E_D). + 1]$$

$$= (\Delta S - \Delta D)\,(1 - [(E_S/E_D) + 1]^{-1}).$$

$$\text{Hence, } \Delta ER = \Delta S^{-1}(P_2(Q_1 + \Delta S - (\Delta S - \Delta D)\,(1 - [(E_S/E_D) + 1]^{-1})) - Q_1P_1)$$

$$= Q_1\,\Delta S^{-1}\,(P_2 - P_1) + P_2\,(ARS + (1 - ARS)\,[(E_S/E_D) + 1]^{-1}).$$

Abstract

THE IMPACT OF FOOD AID ON COMMERCIAL FOOD EXPORT

by

P. Pinstrup-Andersen and Luther G. Tweeten

It has been argued that food aid replaces commercial food imports and reduces world market prices. However, little quantitative information relating food aid and commercial imports of food commodities is available.

In this study we develop a conceptual framework to estimate the impact of food aid on commercial food exports and prices and the export revenue foregone by the donor country by maintaining food aid programs. On the

basis of this framework, the impact of the U.S. food aid during 1964–66 is estimated. The impact on commercial exports and prices was estimated for various levels of food aid. It was found that, on the average each ton of wheat exported under U.S. aid programs replaced .41 tons of commercial wheat imports. The commercial import replaced by the last ton of wheat aid was estimated to be .27 tons.

If the U.S. had chosen to sell the surplus wheat in the commercial world market instead of exporting it through aid programs, the world market price for wheat was estimated to have decreased by 21 per cent of the actual price. Alternatively, if the food aid were terminated and the surplus commodities were allocated to some use other than commercial export, the world market price would have increased to 28 per cent above the actual price.

The export revenue foregone by the U.S., by maintaining wheat aid programs during 1964–66 was estimated for various levels of food aid. The revenue foregone was high at the margin and falling as more wheat was moved from aid programs to commercial export. On the average it was found that the U.S. sacrificed 86 cents for each dollar of wheat exported under aid programs. The net cost of wheat aid was smaller than the revenue forgone due to payments by aid recipients.

It was concluded that the most likely impact of U.S. food aid programs was a decrease in commercial exports and higher world market prices for the types of commodities exported under aid programs.

SPECIAL GROUP O REPORT

R. Evenson (USA) presented his paper on 'Production Quota Systems with Production Uncertainty'. He described a method of calculating the welfare costs of a system in which a government raises the producer's price above the equilibrium price by issuing saleable quota coupons to producers in proportion to their volume of production in a base period. In discussion R. Gumerov (USSR) explained that in USSR the uncertainties of production due to weather did not give rise to any price discrepancies. The use of five-year averages in planning allowed for the occurence of good and bad harvests. The quota system described in the paper was not unlike the system used in planned economics, but the latter excluded the element of speculation which the paper regarded as unavoidable. R. Gumerov thought that the proposed system should take account of changes in income-elasticity of demand as well as in price-elasticity.

I. J. Singh (India) suggested that the analysis should provide for shifts in the supply curve to the right as a result of technological change. In reply, R. Evenson said that although his analysis was based on the market economy he thought it had implications which could be of relevance in planned economics. He had taken long-run supply curves as given.

E. Paniago (Brazil) presented the paper on 'An Evaluation of Agricultural Price Policies for Selected Food products: Brazil' which had been prepared by himself and G. E. Schuh (USA). The theme of his paper was that the choice

of a 'best' price policy (quota systems, direct supplementary payments to producers, dumping, etc.) depended partly on knowledge of the supply and demand elasticies of the respective products. Calculations were made in the paper on the assumption that prices were raised 10 per cent above equilibrium. There were no contributions to discussion of the paper.

P. Pinstrup-Andersen (Denmark) presented the paper on 'The Impact of Food Aid on Commercial Food Export' which had been prepared by himself and L. G. Tweeten (USA). The paper reported the results of a study which aimed at developing a conceptual framework for estimating this impact and the export revenue foregone by the donor country. Some quantitative estimates were given. Prominent in the method used was a sample mail survey sent to 441 individuals judged to have considerable knowledge of aid programmes and their effects. The 88 respondents were mostly government officials, cabinet ministers or economists and politicians affiliated to universities. The results indicated that in 1964–66 each ton of wheat exported under U.S. aid programmes replaced 0.41 of commercial wheat imports into the recipient country on the average. The amount replaced by the last ton was estimated to be 0.27 tons. As regards export revenue foregone by the USA, this was found on average to be 86 cents for each dollar of wheat exported under aid programmes. K. Campbell (Australia) suggested that the survey provided a rather shaky foundation for the conclusions reached on the paper. He wondered how the authors had reconciled differences of opinion among the respondents. W. Wilcox (USA) asked for further explanation about the effect of reduced aid shipments on world market prices, and W. Peterson (USA) asked whether the authors had considered the effects of wheat exports on trade in feed grains. In reply, P. Pinstrup-Anderson admitted that the foundations of the study might be shaky, but thought that these results were better than nothing. He agreed that the estimation of the effect of reducing aid shipments depended on what assumption was made about alternative disposal of the quantities withheld. The authors had assumed perfect substitution between wheat and feed grains as soon as the price of wheat fell below the prices of feed grains.

No list of participants provided.