AgEcon SEARCH
RESEARCH IN AGRICULTURAL & APPLIED ECONOMICS

The World's Largest Open Access Agricultural & Applied Economics Digital Library

This document is discoverable and free to researchers across the globe due to the work of AgEcon Search.

Help ensure our sustainability.

Give to AgEcon Search

AgEcon Search
http://ageconsearch.umn.edu
aesearch@umn.edu

*Papers downloaded from **AgEcon Search** may be used for non-commercial purposes and personal study only. No other use, including posting to another Internet site, is permitted without permission from the copyright owner (not AgEcon Search), or as allowed under the provisions of Fair Use, U.S. Copyright Act, Title 17 U.S.C.*

LUCA SALVATICI, COLIN A. CARTER AND DANIEL A. SUMNER*

The Trade Restrictiveness Index and its Potential Contribution to Agricultural Policy Analysis

INTRODUCTION

Consider the following statements: 'Country A has reduced (increased) its trade distortions in recent years', 'Policies followed by country A are less (more) trade distortive than policies followed by country B', 'Trade negotiations should lead to a reduction of trade distortions'. All three can be seen to share the common assumption that 'trade distortion' is a concept that can both be properly defined and also be measured in such a way as to allow comparisons through time, between countries and across a range of policy mix.

The need to provide a consistent measure of aggregate trade distortion arises in the debate over the benefits of trade liberalization whenever efforts are made to measure its impact on welfare or growth. In addition, it is obvious that the process of trade negotiations provides an important application for this type of index. In the case of agriculture, for example, the Uruguay Round of GATT established commitments in terms of aggregate measures since, on the one hand, internal policies were combined into a single indicator (the aggregate measure of support) while, on the other hand, most non-tariff barriers were transformed into tariff equivalents ('tariffication'). There is clearly a demand for 'trade distortion indicators' which are consistent with economic theory and whose construction is feasible. Unfortunately, many of the traditional indicators have serious theoretical flaws and are difficult to interpret (for a stimulating survey, see Pritchett, 1996). The case of agriculture is usually even more difficult, since one of the principal characteristics of agricultural protectionism is the close link between domestic and border policies (De Benedictis *et al.*, 1991).

According to Anderson and Neary (1996), the elements that define a theoretically consistent policy index of trade restrictiveness include the following:

- a comprehensive policy coverage (tariffs, import quotas, border and domestic policies, and so on);
- a reference point for the 'equivalent-impact' in which there is interest (iso-welfare measures, iso-income measures, and so on);

*University of Rome 'La Sapienza', Italy (Salvatici) and University of California, Davis, USA (Carter and Sumner). Luca Salvatici acknowledges financial support from Consiglio Nazionale delle Ricerche.

- a scalar aggregate in the form of a policy instrument into which the measures considered under the policy coverage are translated (tariff-equivalent measures, subsidy-equivalent measures, quota-equivalent measures, and so on).

A general definition of such an index is as follows: 'depending on a predetermined reference concept, any aggregate measure is a function mapping from a vector of independent variables – defined according to the policy coverage – into a scalar aggregate'. As soon as thought turns to the problem of finding a single number capable of summarizing a set of policies applied in different markets, it is apparent that there is a need to define the types of information which have to be summarized. This means that the process of aggregation should allow certain basic pieces of information to be preserved or, put in a different way, that the final single number is *equivalent* to the original multiple data in terms of the information in which there is interest.

One of the most interesting recent suggestions in the literature is represented by the Trade Restrictiveness Index (TRI) proposed by Anderson and Neary (Anderson and Neary, 1994; Anderson, 1995; Anderson and Neary, 1996). This paper will examine the functioning and the properties of the index, arguing that the TRI can usefully enrich the arsenal of indicators usually applied by agricultural economists.[1] Nonetheless, it is important to note at the outset that it has nothing to do with trade (flow) restrictions. In point of fact, the TRI focuses on the domestic welfare impact of a given set of policies.

The paper is organized around the TRI and its theoretical background; it highlights some of its features and discusses the type of questions which can be addressed using the index. In terms of the notation, subscripts always indicate partial derivatives, with the exception of the letters i and j, which are used as indices.

THE TRADE RESTRICTIVENESS INDEX

The TRI represents a uniform tariff-equivalent, iso-welfare measure. Although the inclusion of import quotas introduces analytical complications – for example, in terms of how the quota rent is shared between the importing and exporting country (Anderson and Neary, 1992) – both price and quantity import restrictive policies can be handled by the TRI. For the sake of simplicity, the following presentation deals only with tariffs.

The TRI (Δ) is defined as the inverse of the uniform tariff factor (one plus the uniform tariff), which would compensate the representative consumer for the actual change in tariffs, holding constant the balance of trade. Economic efficiency is defined in terms of the welfare of the representative agent and distributive issues are ignored.

If new tariffs are equal to zero, $1/\Delta - 1$ is the uniform tariff which is equivalent in efficiency to the original trade policy. More generally, $1/\Delta$ is the scalar factor of proportionality by which period 1 prices would have to be adjusted to ensure balanced trade when utility is at period 0 level. It should be

noted that this is not the same as raising tariffs by a uniform proportionate rate, except in the case of a full liberalization.

Formally,

$$\Delta(\pi^1, u^0; k^0) = [\Delta: B(\pi^1/\Delta, u^0; k^0) = 0], \tag{1}$$

where $B(\pi, u; k)$ is the balance-of-trade function. The $B(\cdot)$ function is equal to the net income transfer (equal to zero in equilibrium) required to reach a given level of aggregate national welfare (u) for an economy with a given vector of domestic prices (π) and a vector (k) which includes all the variables assumed exogenous (world prices, factor endowments and so on). The balance-of-trade function represents the external budget constraint of the economy, since it summarizes the three possible sources of funds for financing imports: earnings from exports, earnings from trade distortions or international transfers.

Since Δ deflates period 1 prices and quantities to attain period 0 utility, it is a compensating variation type of measure. The welfare cost of protection can be expressed as the integral over the scalar TRI inverse, in exactly the same way as the cost of protection with a single tariff equals an integral over the price of the tariff-restricted good. It is important to point out that standard welfare measures of the cost of protection give a correct indication of the shift in the relevant general equilibrium budget constraint, but they lack a scale (normalization) that would permit international and intertemporal comparisons.

The proportional change in the TRI is a weighted average of the proportional changes in domestic prices. Totally differentiating equation (1) we get

$$(B'_\pi/\Delta)d\pi - (B'_\pi/\Delta^2)d\Delta = 0, \tag{2}$$

then

$$d\Delta/\Delta = \textstyle\sum_i (B_{\pi i}\pi_i/B'_\pi\pi)(d\pi_i/\pi_i). \tag{3}$$

The weights in (3) turn out to be the proportions of marginal deadweight loss due to each tariff, and they depend on the partial derivatives of the $B(\cdot)$ function with respect to prices. In order to have a more precise idea of the components of these derivatives, we use a standard model, based on the following assumptions:

- perfect competition,
- constant returns to scale technology,
- only tradable goods are produced (alternatively, the price of non-traded goods is determined competitively),
- small country,
- net revenues from trade distortions are returned to the representative agent,
- at least one untaxed good is used as the *numéraire* (it is assumed that it is the export good), and exogenous trade policy.

If there are no international transfers, the balance-of-trade constraint can be expressed as:

$$\pi' m - r = t' m, \tag{4}$$

where
π = domestic price vector of tariff-constrained goods,
m = vector of tariff-constrained imports,
r = vector of exports,
$t = \pi - \pi^*$ = tariff.

The left-hand side of equation (4) is the trade expenditure function $E(\pi, u)$, expressing the optimal behaviour of the representative agent. It is important to note that, even if the function $E(\cdot)$ is homogeneous of degree one in prices, the balance-of-trade function does not have this property because of the presence of trade restrictions and the fact that there is an implicit *numéraire*.

The function $E(\cdot)$ is obtained as the difference between the consumer's expenditure function, $e(\pi, u)$, and the gross domestic product (GDP) function, $g(\pi, k)$. The derivatives of $E(\cdot)$ with respect to prices are the compensated import demand functions.

As far as the GDP function is concerned, k represents the fixed endowment of factors of production. The derivatives of the $g(\cdot)$ function with respect to prices are the economy's general equilibrium net supply functions by Hotelling's Lemma. Accordingly, g_π is equal to the supply function of the tariff-constrained good if there is domestic production of a perfect substitute for the import; it is equal to minus the imported input demand function if the good is an intermediate input into production; and it is equal to zero if the import is for final consumption only and there is no domestic production (the 'Armington assumption').

Totally differentiating the external budget constraint (4) implies:

$$\pi' dm + m' d\pi - dr - t' dm - m' dt = 0. \tag{5}$$

Using the small country assumption ($d\pi = dt$), (5) can be rewritten as:

$$\pi' dm - dr = t' dm. \tag{6}$$

The left-hand side of equation (6) is the change in net trade expenditure at the initial prices ($B_u du$). It might arise, for example, if a gift of foreign exchange enabled more net expenditure at constant prices. The right-hand side of (6) is the net foreign exchange effect of the change in trade policy.

Holding utility constant,

$$dm = m_\pi dt. \tag{7}$$

Hence

$$t' m_\pi = -B'_\pi, \tag{8}$$

where the left-hand side of (8) represents the marginal cost of tariffs, while the right-hand side of (8) is the vector of transfers needed to compensate for increases in tariffs.

The sign of $(B'_{\pi}dt)$ is positive if tariff increases are inefficient. This appeals to intuition, but it should not be taken for granted, since cross-price effects can make it negative (this would be a typical 'second-best' result).

INTERPRETATION OF THE RESULTS

Figure 1 (adapted from Anderson, 1995 and Neary, 1995) provides a graphical illustration of the main results. U^0 is an iso-welfare contour in tariff factor space (T_1, T_2), where the tariff factor is defined as one plus the ad valorem tariff rate. In the convex region, for each level of utility the value of $B(\cdot)$ increases as tariffs rise. The regions with a positive slope are drawn in order to show a typical second-best 'perverse' result. In these regions, as a matter of fact, the marginal cost of the tariff is negative. This means that a reduction of T_2 from F, for example, would actually decrease the welfare level, while an increase of the tariff would imply a lower trade expenditure for the same level of utility.

The curve labelled τ illustrates the locus of tariff factors along which the import-weighted average remains constant. Its shape depends on the substitution properties within the economy, but it is necessarily downward-sloping in

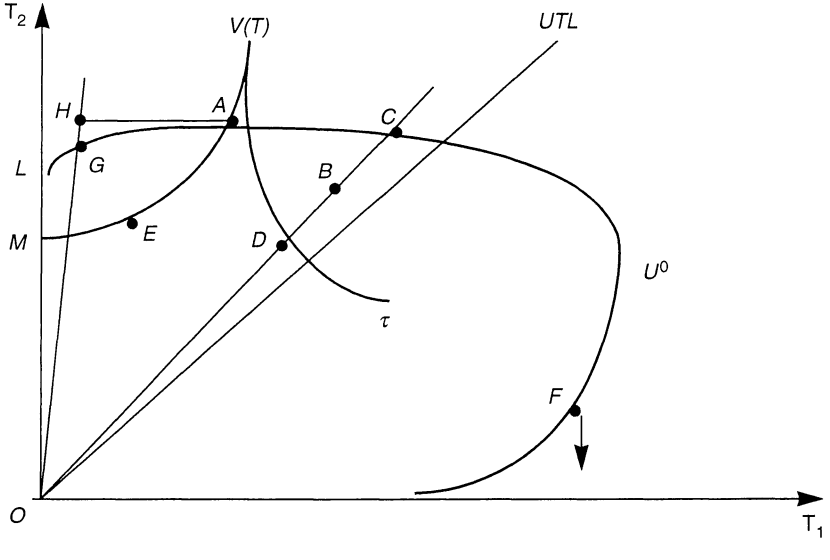

FIGURE 1 *Consistent and inconsistent measurements of trade reform*

this two-good case. $V(T)$ is an iso-variance contour. Since the partial derivative of the variance with respect to tariff factor i is equal to

$$dV(T)/dT_i = 2(t_i - \tau)/n, \tag{9}$$

the contour's slope is equal to

$$dT_2/dT_1 = -(t_1 - \tau)/(t_2 - \tau). \tag{10}$$

In this two-good case, the partial derivatives must have opposite signs, hence the slope is positive. The variance increases with distance from the uniform tariff locus (*UTL*).

The first result presented in Figure 1 is the comparison between the TRI and the moments of the traditional tariff indices. Let us assume that trade reform leads to a movement from *A* to *B*. The TRI is equal to *OB/OC* and shows a reduction of the index. On the contrary, the mean tariff index would register a rise in protection, while the coefficient of variation would show a reduction of dispersion (lower variance, higher mean). Area *ALM* represents a set of (possible) tariff reforms which are welfare-improving according to the TRI ($\Delta < 1$), but which the coefficient of variation would measure as welfare-inferior (lower mean, higher variance). The bottom line, then, is that purely statistical measures, such as the trade-weighted average tariff or the coefficient of variation of tariffs, bear no necessary relation to the welfare cost of trade policy.[2]

Secondly, points *D* and *E* show that (1) a mean-preserving tariff reform is efficient if it reduces the tariff's variance, and (2) an average tariff reduction with constant variance is efficiency improving. However, Anderson (1995) shows that these propositions hold only if the balance of trade function has a constant elasticity of substitution form.

Thirdly, Figure 1 can also be used to show how the TRI considerably enlarges the possibility of evaluating trade reforms. According to the standard results of the piecemeal trade reform literature (Foster and Sonnenschein, 1970; Hatta, 1977), it can only be said that welfare increases if there is a move along any ray towards the origin (the 'radial reduction' rule) or a move towards *UTL* (the 'concertina' rule). In the case of the TRI, on the other hand, any point within the iso-welfare contour shows a reduction of the uniform tariff equivalent.

Finally, it can be seen how even the TRI measure is not completely free from counterintuitive 'second-best' results. As a consequence of the theoretical ambiguity about the sign of the weights in (3), an increase in tariffs or a decrease in quotas may be associated with either a rise or a fall in the TRI.[3] For instance, moving from *A* to *H* simply implies a reduction of T_1; nonetheless, the TRI will signal an increase in the index ($\Delta = OH/OG > 1$). This means that it is not possible to be sure *a priori* about the relation between a change in Δ and a change in welfare.

So far, only import restrictions (namely tariffs) have been considered. The converse case of import subsidies does not seem to have a great practical relevance but, as far as exports are concerned, both restrictions and subsidies

are widely adopted by national governments. The European Union's export refund policy and the United States' Export Enhancement Program are classic examples of export subsidy policies in the agricultural sector. In terms of export restrictions, quantitative restrictions have become increasingly common under the label of 'voluntary export restraints', while several developing countries traditionally use export taxes as a revenue source for the public budget.

Even if all the existing presentations of the TRI focus on import tariffs and quotas, it is important to note that the interpretation of the TRI differs according to the type of trade policy considered. Table 1 summarizes the impact of changes in the different types of policies in terms of changes in the TRI, the volume of trade and the welfare level.

Each of the rows in Table 1 represents a reduction in a trade-distortive policy, with different intensities across markets that are summarized through the TRI. Assuming that all goods are substitutes, welfare impacts are always positive. Import taxes and export subsidies fit our previous description: a reduction in a trade distortion implies that $\Delta < 1$ and is signalled by a reduction in the TRI.

TABLE 1 *Comparison of different border policies*

	Policy change	TRI change	Trade volume change	Welfare change
Import tax ($\Delta < 1$)	–	–	+	+
Export subsidy ($\Delta < 1$)	–	–	–	+
Import subsidy ($\Delta > 1$)	–	+	–	+
Export tax ($\Delta > 1$)	–	+	+	+

Each of the rows in Table 1 represents a reduction in a trade-distortive policy, with different intensities across markets that are summarized through the TRI. Assuming that all goods are substitutes, welfare impacts are always positive. Import taxes and export subsidies fit our previous description: a reduction in a trade distortion implies that $\Delta < 1$ and is signalled by a reduction in the TRI.

However, if there are import subsidies and export taxes, the results are reversed. In these cases world prices are higher than domestic prices and a reduction of the distortion leads to an increase of the latter. Trade liberalization, then, implies $\Delta > 1$ and an increase in the TRI. The message here is that great care should be used in interpreting the TRI results, especially if different types of border policies are taken into account.

In Table 1, the impact on trade flows is obviously of different sign in the cases of the reduction of taxes or the reduction of subsidies. Even if in each case the resulting volume of trade is closer to the one prevailing under free trade, it is important to realize that the concept of 'trade restrictiveness', assumed in the definition of the TRI, is a very precise (and limited) one. It is

related to, but nonetheless very different from, the one that could be considered, for example, in the context of trade negotiations. In that case, the trade volume displacement due to a certain set of policies may very well be more relevant to cross-country comparisons than the effects on domestic welfare.

Figure 2 provides a graphical example of the differences in the implied trade volumes resulting from alternative definitions of trade restrictiveness. We consider a partially decoupled set of policies, which includes a tariff and a production quota fixed at exactly the same level of production that would have occurred under free trade.

In the quantity space of a two-good economy (y_1, y_2), A is the production bundle and FT is the consumption bundle under free trade. As a consequence of the introduction of the tariff-cum-quota set of policies, the consumption bundle shifts from FT to TQ, while the production quota $y_2^{\wedge}$ does not allow the production bundle to change. On the other hand, if there is replacement of the tariff-cum-quota with a tariff-equivalent in terms of welfare (that is, the type of counterfactual experiment used in the construction of the TRI), the economy will produce at D and consume at TE. Clearly, in the latter case both imports ($TE - C < TQ - B$) and exports ($C - D < B - A$) are lower than under the tariff-cum-quota case, although the economy is on the same indifference curve U^1.

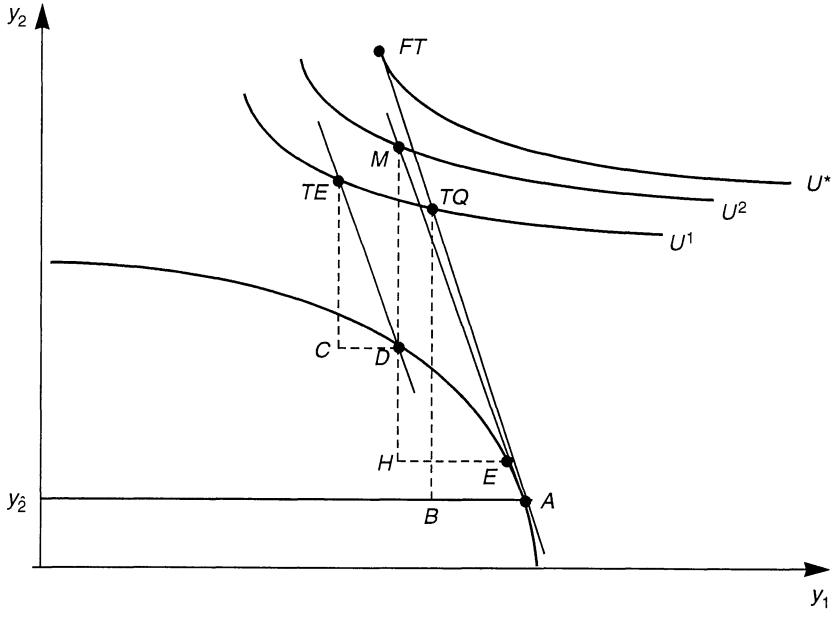

FIGURE 2 *Comparison between different tariff equivalents*

It is possible to draw the tariff equivalent in terms of the volume of trade for the tariff-cum-quota set of policies, obtaining the points E and M where, by construction, $M - H = TQ - B$ and $H - E = B - A$. In this case, however, the level of welfare achieved by the two policies is different, with $U^2 > U^1$.

CONCLUSIONS

This paper has pursued two goals. Firstly, the nature of the TRI and its theoretical background have been considered. Secondly, the meaning of the index has been discussed, with an explanation of possible ambiguities in its interpretation.

The TRI is a scalar representing the uniform tariff which is equivalent (in a welfare sense) to a given protective structure. It is a theoretically consistent answer to a precise question. To the contrary, for many alternative indices, like the average tariff, it is not possible to frame a meaningful question for which the index provides an answer.

Even if the TRI seems to provide an acceptable answer, it is by no means the only possible one. The impact of any economic policy is evident in several dimensions, which require a variety of quantifying measures. Hence different results do not necessarily indicate that one measure is more correct than another, but rather that each captures different aspects.[4]

The TRI focuses on a crucial dimension for economic analysis, namely the impact on domestic welfare. However, as far as trade policies are concerned, another traditional and relevant parameter is represented by the impact on flows of trade. In this respect, it was shown that 'trade restrictiveness' is a misnomer, which may lead to serious misunderstandings about the meaning of the index.

NOTES

[1]There have already been some applications dealing with agricultural policies by Anderson *et al.* (1995) and Draaisma and Fulponi (1996).

[2]In fact, all the existing empirical results show that the correlation between changes in the TRI and changes in the tariff moments is close to zero.

[3]It should be noted that, if the denominator of (3) changes sign, it is impossible to exclude multiple solutions or the possibility that Δ is not even defined in certain regions.

[4]A very popular index among agricultural economists is the Producer Subsidy Equivalent (PSE), which represents a first-order approximation of the change in producer surplus or, alternatively, can be considered an 'iso-revenue, subsidy equivalent'. The differences between the PSE and the TRI are analysed in Anderson *et al.* (1995).

REFERENCES

Anderson, J.E. (1995), 'Tariff Index Theory', *Review of International Economics*, **3**, 156–73.

Anderson, J.E. and Neary, P.J. (1992), 'Trade Reform with Quotas, Partial Rent Retention and Tariffs', *Econometrica*, **60**, 57–66.

Anderson, J.E. and Neary, P.J. (1994), 'Measuring the Restrictiveness of Trade Policy', *The World Bank Economic Review*, **8**, 151–70.

Anderson, J.E. and Neary, P.J. (1996), 'A New Approach to Evaluating Trade Policy', *Review of Economic Studies*, **63**, 107–25.

Anderson, J.E., Bannister, G.J. and Neary, P.J. (1995), 'Domestic Distortions and International Trade', *International Economic Review*, **36**, 139–56.

De Benedictis, M., De Filippis, F. and Salvatici, L. (1991), 'Between Scylla and Charibdys: Agricultural economists' navigation around protectionism and free trade', *European Review of Agricultural Economics*, **18**, 311–37.

Draaisma, T. and Fulponi, L. (1996), 'Measuring the Aggregate Trade Effects of the Change in Domestic Policies: An Application of the Trade Restrictiveness Index', paper presented at the VIIth meeting of the European Agricultural Economists Association, September, Edinburgh.

Foster, E. and Sonnenschein, H. (1970), 'Price Distortion and Economic Welfare', *Econometrica*, **38**, 281–97.

Hatta, T. (1977), 'A Theory of Piecemeal Policy Recommendation', *Review of Economic Studies*, **44**, 1–21.

Neary, J.P. (1995), 'Trade Liberalisation and Shadow Prices in the Presence of Tariffs and Quotas', *International Economic Review*, **36**, 531–54.

Pritchett, L. (1996), 'Measuring outward orientation in LDCs: can it be done?', *Journal of Development Economics*, **49**, 307–35.