AgEcon SEARCH
RESEARCH IN AGRICULTURAL & APPLIED ECONOMICS

The World's Largest Open Access Agricultural & Applied Economics Digital Library

This document is discoverable and free to researchers across the globe due to the work of AgEcon Search.

Help ensure our sustainability.

Give to AgEcon Search

AgEcon Search
http://ageconsearch.umn.edu
aesearch@umn.edu

*Papers downloaded from **AgEcon Search** may be used for non-commercial purposes and personal study only. No other use, including posting to another Internet site, is permitted without permission from the copyright owner (not AgEcon Search), or as allowed under the provisions of Fair Use, U.S. Copyright Act, Title 17 U.S.C.*

START

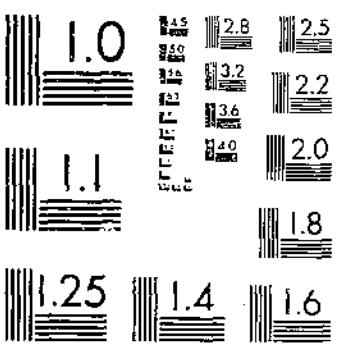

MICROCOPY RESOLUTION TEST CHART
NATIONAL BUREAU OF STANDARDS-1963-A

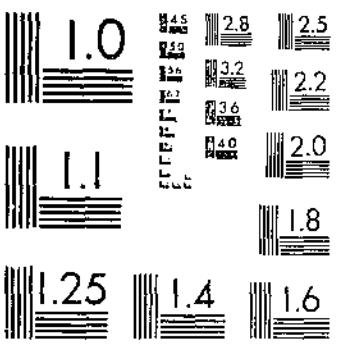

MICROCOPY RESOLUTION TEST CHART
NATIONAL BUREAU OF STANDARDS-1963-A

R
630 [illegible]
S7

STANDARD MODULAR FOUNDATION PANELS FOR HOUSES OF ALL SHAPES

DEPT.
NOV 1 1976

Technical Bulletin No. 1541

Agricultural Research Service
UNITED STATES DEPARTMENT OF AGRICULTURE

A 1.36

CONTENTS

	Page
Abstract	1
Introduction	1
Functional design of foundation panels	2
Functional design of center beam	3
Structural design of foundation panels	4
Vertical load design	4
Horizontal load design	7
Combined stress for compression and bending	10
Structural design of center beam	10
Foundation-panel tests	11
Vertical loads on a continuous foundation	11
Settling of panels on crushed rockfill	13
Deflection of panels as a function of support location	13
Deflection of panels across a variable span	13
Use considerations	15
Conclusions	17

ILLUSTRATIONS

Fig.		
1.	Foundation panel design	2
2.	Foundation panels built in four lengths	2
3.	Standard foundation panel with telescoping joints	3
4.	Corner panel design	4
5.	Modification of foundation panel to form a wide footing	5
6.	Modification of foundation panel to provide a secure tie between floor joists and panel	5
7.	Increasing load-carrying ability by notching 2-inch framing member into studs	6
8.	Center beam designed for compatibility with panelized foundation	6
9.	End of center beam with step-down notches	7
10.	Redesigned foundation panel for load-bearing wall	8
11.	Horizontal loading on foundation panels	8
12.	Design of center-beam span packages	9
13.	Testing frame designed to load foundation and wall panels	10
14.	Location of dial gages for measuring top-beam deflection	11
15.	Deflection curve for top beam of foundation panel under load of 1,300 lb/lin ft	12
16.	Vertical settling curve for wood foundation on gravel fill with and without leveling supports at design load of 1,300 lb/lin ft	12
17.	Load versus deflection of bottom plate of foundation panel when supported under or between studs	13
18.	Deflection versus spacing for four loads and for spans of 2 to 8 feet	14
19.	Features of foundation panel system	14
20.	Floor plan of typical house to be fitted with standardized panel foundation	15
21.	Corner-panel placement for irregular-shaped house	15
22.	Straight-panel and filler-strip placement for completing walls	16
23.	End-span packages fitted to foundation panels to begin center-beam construction	16
24.	Standard and variable span-package placement to complete beams	17

TABLE

1.	Total horizontal load for foundation with backfill depths of 1 to 4 feet and the maximum bending moment for each depth	8

Washington, D.C. Issued September 1976

For sale by the Superintendent of Documents, U.S. Government Printing Office
Washington, D.C. 20402 - Price 40 cents

Stock No. 001-000-03602-5

There is a minimum charge of $1.00 for each mail order

STANDARD MODULAR FOUNDATION PANELS FOR HOUSES OF ALL SHAPES

By JERRY O. NEWMAN and LUTHER C. GODBEY, *research agricultural engineers, Agricultural Research Service, U.S. Department of Agriculture, Clemson, S.C.*

ABSTRACT

A system of standard foundation panels, or modules, was designed, built, and tested to provide builders with a variety of house designs, shapes, and sizes while incorporating the basic features of simplicity, flexibility, durability, and soundness, thus insuring economical remodeling of houses to meet the changing needs of individual families. Pressure-treated, premanufactured panels, built in 2-, 4-, 6-, and 8-foot lengths, have telescoping joints that extend up to 10 inches for adjusting foundation wall length, thus allowing almost any length of foundation wall to be assembled from standard parts. Standard and obtuse corner panels eliminate onsite cutting and fitting and increase the versatility of the foundation. Step-down notches on the ends of the center beam adapt it for fastening at any point along the foundation panels. Leveling posts, which protrude through the beam, make beam installation easy, but custom-fitted blocks attached to the leveling posts carry most of the load, since they are directly under the beam. This foundation is simply constructed and easy to assemble or disassemble, and it can be installed in a minimum of time.

INTRODUCTION

Increased mechanization and specialization, increased costs of labor and building materials, and increased demand for new houses have resulted in the need for mass production of panelized, or modular, housing components to reduce costs, to improve quality, and to meet demand.

Original foundation panel design and construction revealed that some of the panels were built out-of-square, and this defect projected to adjacent panels. Moreover, the frames were bulky and difficult to assemble, and plywood was the only tie between adjacent panels. Also, the frame projected beyond the plywood skin and left unsupported plywood on the opposite end of the panel. In addition, cutting and fitting was needed for panels other than the standard 8-foot modules and for forming corners.

A new modular foundation was designed with the flexibility to provide builders with a variety of house designs, shapes, and sizes. This new design allows a house to be easily and economically remodeled to meet the changing needs of individual families.

This panel is for a curtain-wall foundation, where the roof and floor loads are carried by a separate structure; it therefore has limited application. Since several of its features are not compatible with conventional construction practices, it was necessary to develop alternate panels to support vertical loads, adapt to stick-type construction, and fit premanufactured modules or trailers.

One of the major uses for a panelized foundation is for panelized houses designed to sit on a previously built foundation and subfloor package. This type of panel requires a load-bearing foundation and a footing, which were developed in the new panel design.

It was necessary to modify the foundation panel to accept the floor joists and wall and roof loads and transfer them through the panel to the soil. Moreover, a compatible center beam

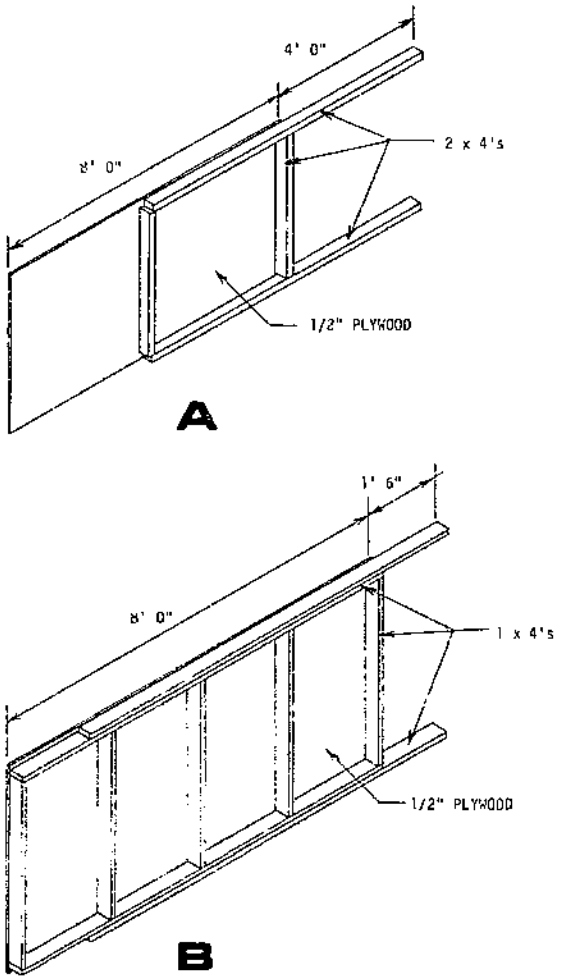

FIGURE 1.—Foundation panel design. *A*, Original panel. *B*, Redesigned panel.

was required to make the foundation a complete package.

This bulletin presents the developmental design and construction of the new foundation panels and gives the procedures for testing the panels under design loads and the reaction of the panels to those loads.

FUNCTIONAL DESIGN OF FOUNDATION PANELS

The original panel design (fig. 1*A*) for a pole-frame prototype house consists of a ½-inch plywood skin and an 8-foot frame of 2 by 4's that supports one-half of the attached plywood skin and projects to support one-half of the skin on the adjacent panel.

Figure 1*B* shows the new panel design, which features a frame of 1 by 4's with a staggered-joint double plate along the top and bottom of the panel. This frame fits behind the entire area of the plywood sheathing, thus holding the plywood flat at all times and preventing warpage when in storage. Two 1 by 4's project 18 inches from the ends of each panel and fit snuggly into slots in the adjacent panel. The use of double-headed nails allows the projecting members to be easily fastened or unfastened from the adjacent panel.

Prefabricated, pressure-treated panels, built in 2-, 4-, 6-, and 8-foot lengths, have telescoping joints (fig. 2) that allow them to fit nonmodular structures. The 18-inch projections slide or telescope up to 10 inches per joint (fig. 3)

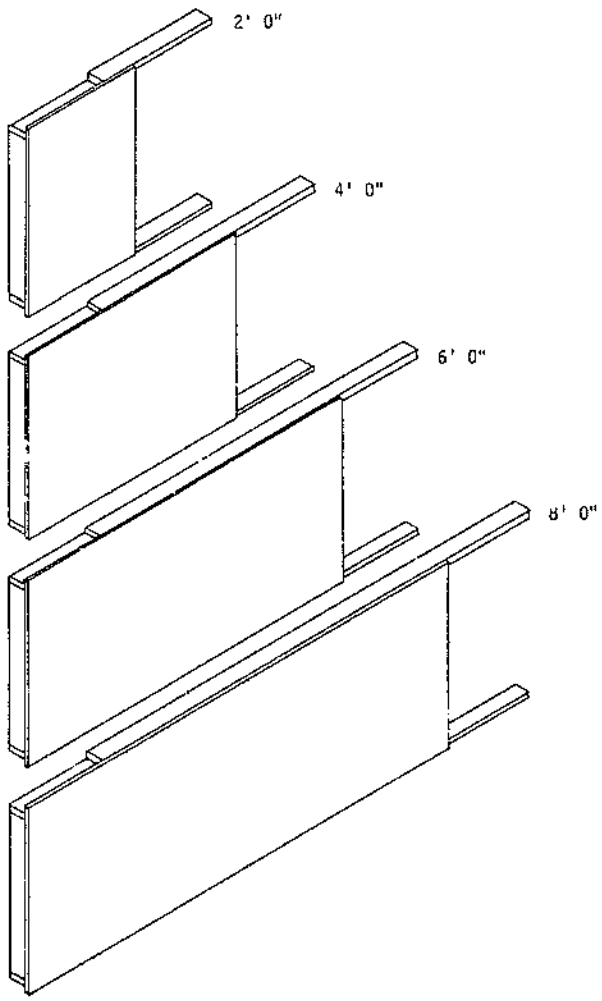

FIGURE 2.—Foundation panels built in four lengths.

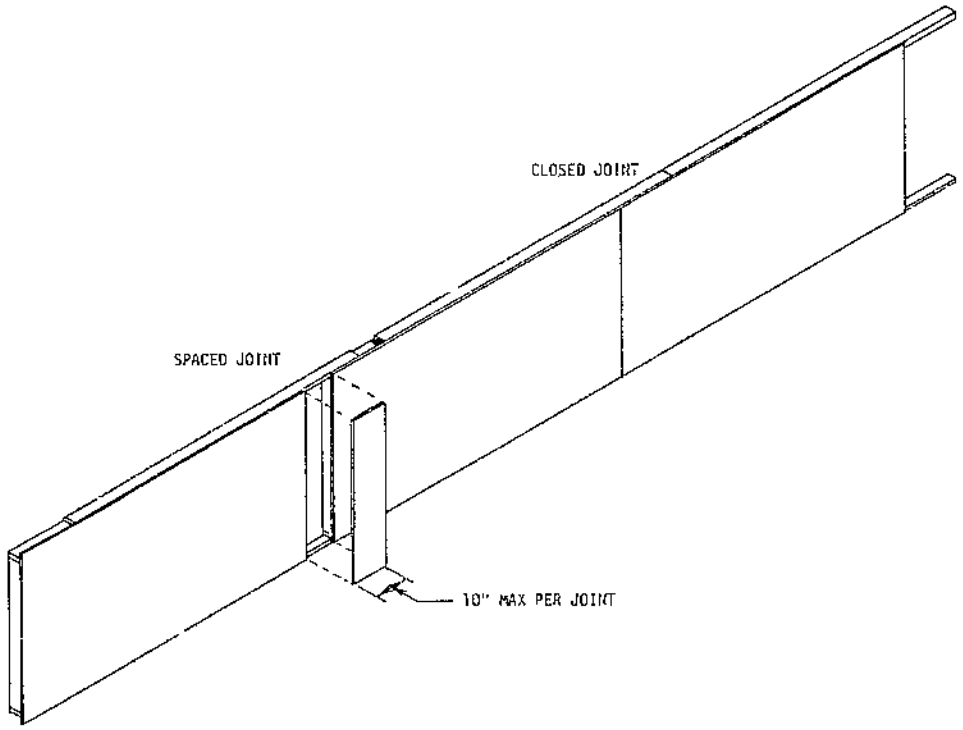

FIGURE 3.—Standard foundation panel with telescoping joints.

thus allowing almost any length of foundation wall to be assembled from standard parts.

A standard corner panel provides 2 feet of wall on each face (fig. 4*A*), and an outside, or obtuse, corner panel allows offsets and L-shaped or other plans to be fitted with standard parts (fig. 4*B*). These corner panels nearly eliminate onsite cutting and fitting. However, offsets of less than 4 feet require specially constructed panels.

Figure 5*A* shows the original foundation panel with narrow bottom plates. A 7¼-inch-wide bottom plate provides a footing below the plywood skin; thus, the panel can be centered for a standard house or set to one edge to support a pole frame (fig. 5*B*).

Figure 6*A* shows the original foundation panel with double plates at the top. Figure 6*B* shows the new foundation panel with a lowered top plate, which places the floor joists on the panel and flush against the plywood and, when nailed, provides a secure tie between the floor joists and the panel.

The new panel design also features a 2- by 6-inch framing member (notched into the studs) that replaces one of the top plates. This change increases the ability of the panel to carry loads from the floor joists, walls, and roof (fig. 7*B*). Other kinds of alterations are sometimes needed for other special applications.

FUNCTIONAL DESIGN OF CENTER BEAM

The ends of the center beam must fit the contour of the side panels and attach directly to them. The supports along the length of the beam are of variable length so that beam height can be adjusted until level (fig. 8). These features allow the beam to be easily installed and make it compatible with this foundation.

The step-down notches on the ends of the center beam (fig. 9) allow it to be butted against and fastened to the foundation panels at any point along their length. Since the center beam is built up from relatively short lengths of timber, it is necessary to stagger the joints to insure continuity throughout the length of the beam. The vertical posts, which protrude through the beam, are actually leveling posts. One side of the beam, when held level, is fastened to the posts, and then the other members are installed. The posts are cut off flush with the top of the beam. Next, two short posts are cut to fit after the beam has been leveled. These posts carry most of the load, since they are directly under the beam, thus eliminating the

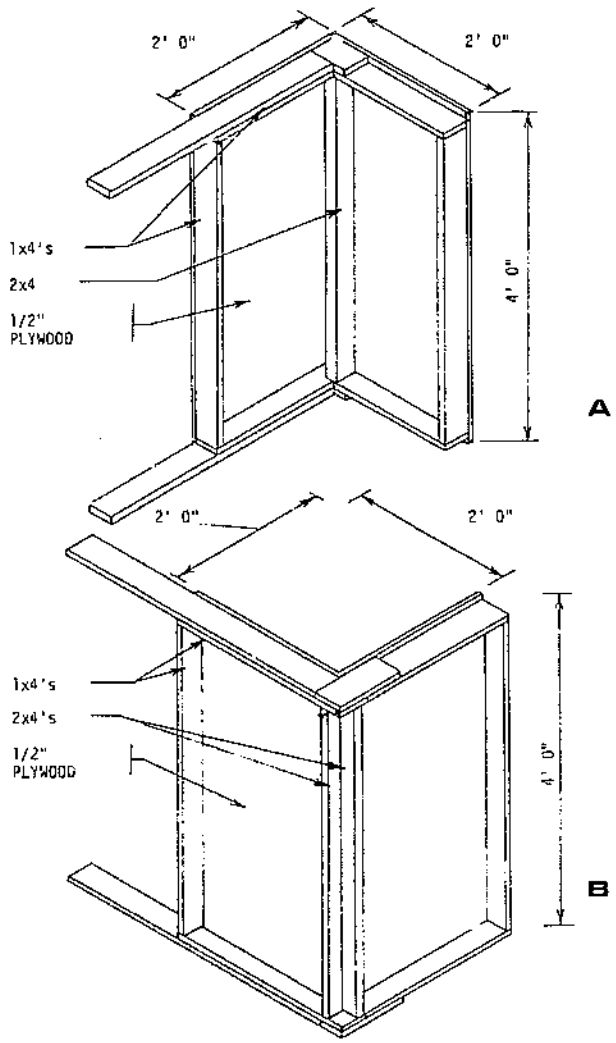

FIGURE 4.—Corner panel design. *A*, Standard corner panel. *B*, Obtuse corner panel.

need for excessive nailing to the leveling posts. The post spacing is modular except for the center span, which is cut and fitted on the job. However, a special center package could be produced for each house width. A manufacturer would likely provide end-span packages, center-span packages, and standard-span packages.

STRUCTURAL DESIGN OF FOUNDATION PANELS

Since there are so many factors that influence the loads that a foundation must resist, it was important that a system of standard panels be designed to meet severe conditions and be overdesigned for more moderate conditions. Users of the design information in this bulletin must make certain that loads fall within the limits prescribed in this section.

Vertical Load Design

The recommended vertical design loads for a one-story house are as follows:

Roof:	
Live load	30 lb/ft²
Dead load	10 lb/ft²
Total	40 lb/ft²
Ceiling	10 lb/ft²
Floor	50 lb/ft²
Wall	50 lb/ft

In calculating the total load on a 1-foot length of foundation wall assume a trussed roof for a 32-foot-wide house and add 2 feet for overhang:

Roof (one-half roof load): $(34\times40)/2$ =	680 lb/ft
Ceiling (one-half ceiling load): $(32\times10)/2$ =	160 lb/ft
Floor (assume a single center support, one-fourth floor load): $(32\times50)/4$ =	400 lb/ft
Wall (wall load): =	50 lb/ft
Total load =	1,290 lb/ft

In calculating load bearing on soil assume a 16-inch rockfill. Bearing on soil is

$$\frac{\text{Load/ft}}{\text{Bearing area/ft of wall}} = \frac{1{,}290}{(12\times16)/144} = \frac{1{,}290}{1.33} = 967.50 \text{ lb/ft}^2.$$

In determining rockfill depth assume a foundation base of 7.5 inches. Then, the total projected width of footing is 8.5 inches (16 minus 7.5 inches), and the projected footing on each side of panel is 4.25 inches (8.5 inches÷2); the necessary depth is 4.25 inches, assuming a 45° angle of repose, or the depth is 7.36 inches assuming a 60° angle of repose. Thus, one would use 8-inch rockfill.

For calculating stress in vertical studs (compression load) assume a ½-inch plywood skin, with 2 by 4's spaced 2 feet on center. The area of wall section per 2 feet of wall length will be 10.75 in² [3.5×1.5+22 (0.25)* inches], or the area per 1 foot of section will be 5.37 in² (10.75 in²÷2). The compression stress is calculated as follows:

$$\frac{\text{Load per foot}}{\text{Area of plywood and framing per foot}} = \frac{1{,}290}{5.37} = 240 \text{ lb/in}^2.$$

* One-half thickness of the plywood is effective in compression, 0.25 inch.

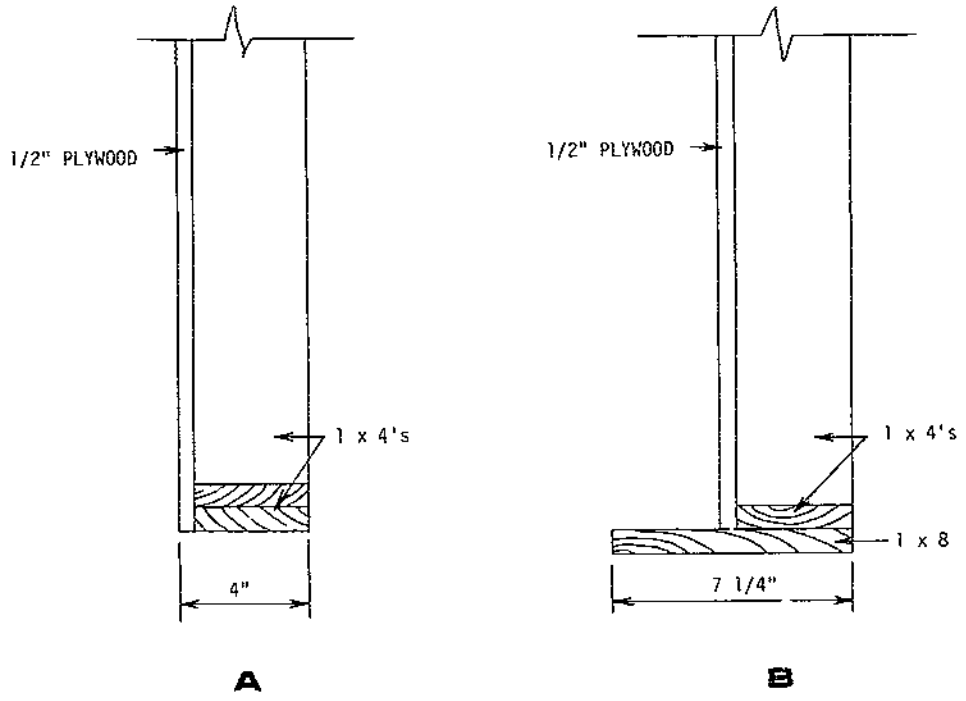

FIGURE 5.—Modification of foundation panel to form a wide footing. *A*, Original foundation panel. *B*, Foundation panel with wide footing.

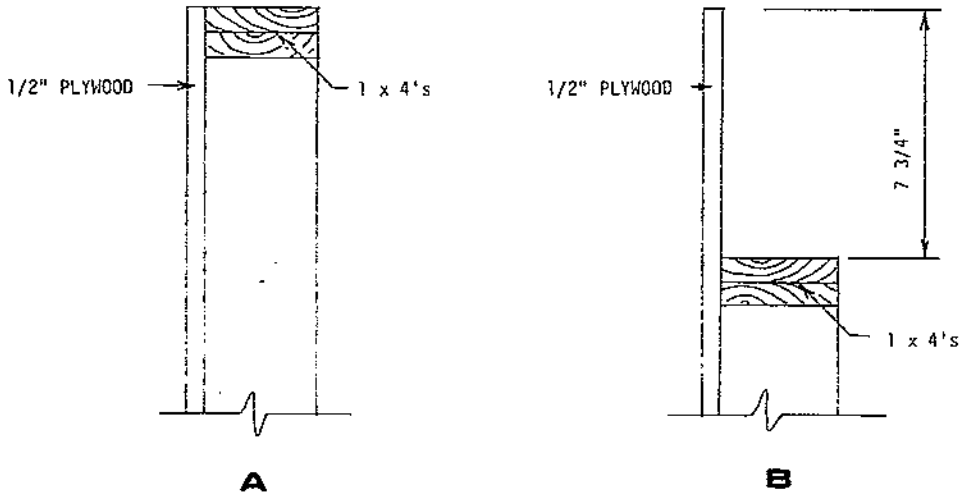

FIGURE 6.—Modification of foundation panel to provide a secure tie between floor joists and panel. *A*, Original foundation panel. *B*, Foundation panel with lowered top plate.

If the allowable compression stress of wood is assumed to be 1,200 lb/in^2, the compressive stress of 240 lb/in^2 is not critical.

In determining the design of the top-plate beam assume a floor joist spacing of 16 inches on center for a 32-foot-wide house, with a vertical stud spacing of 24 inches on center and a load per foot of foundation wall of 1,290

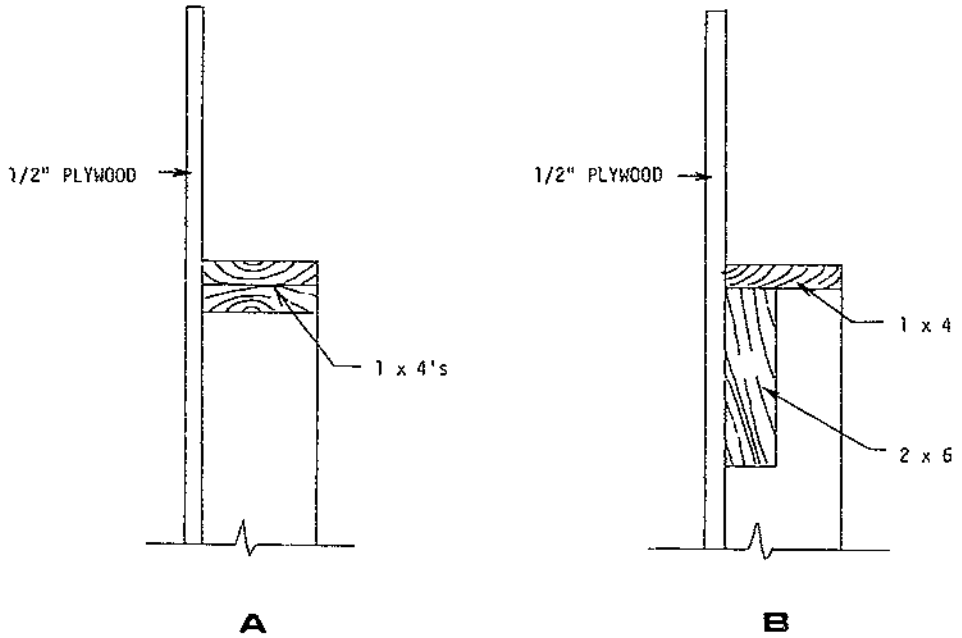

FIGURE 7.—Increasing load-carrying ability by notching 2-inch framing member into studs. *A*, Original foundation panel. *B*, Foundation panel with 2- by 6-inch beam.

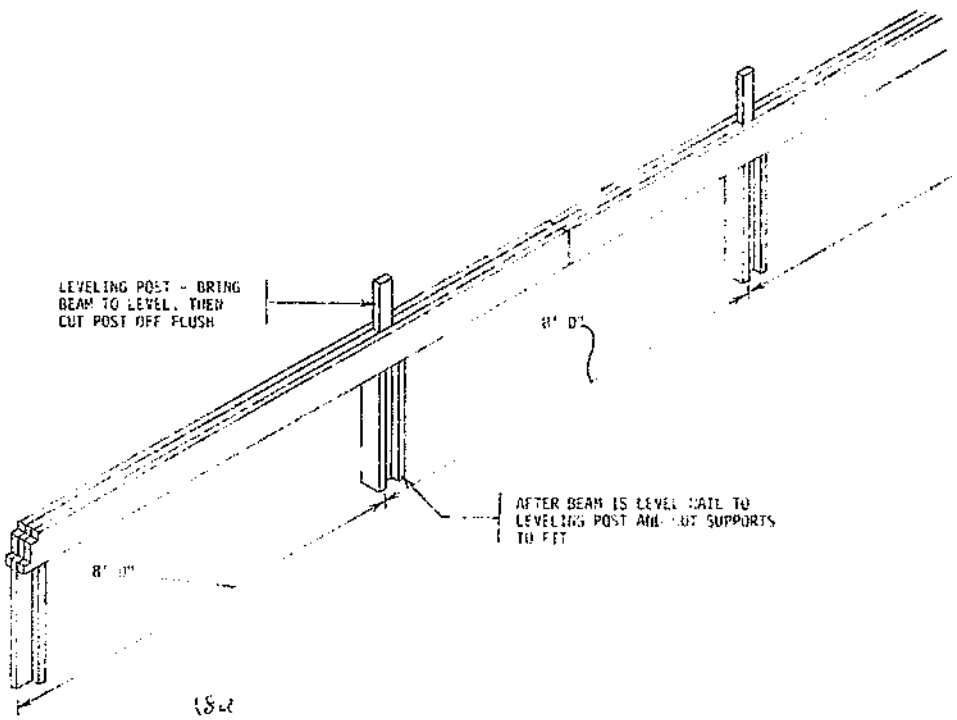

FIGURE 8.—Center beam designed for compatibility with panelized foundation.

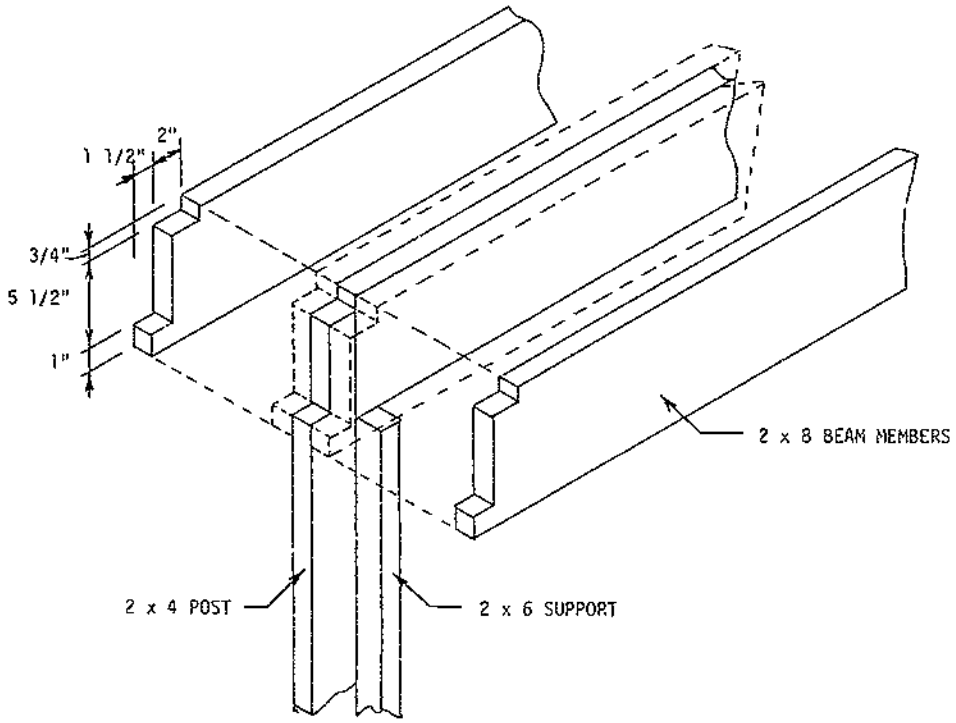

FIGURE 9.—End of center beam with step-down notches.

lb. Then, the total load of a single floor joist on the foundation wall is 1,720 lb—(1,290×16)/12. This load would be most critical at the center of the 2-foot span between vertical studs.

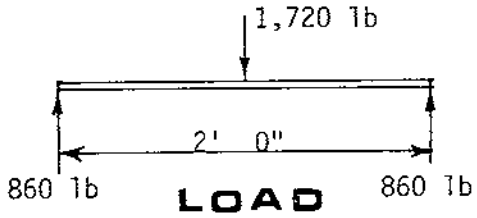

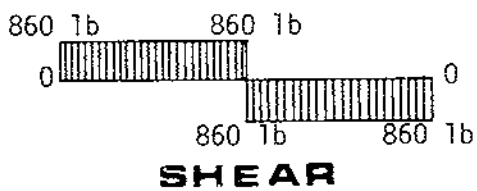

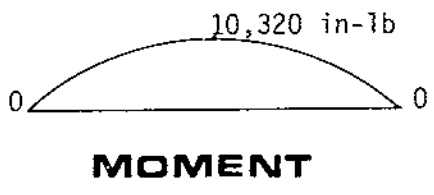

For calculating the desired section modulus assume that the allowable S is 1,500 lb/in² and calculate as follows:

$$\frac{I}{c} = \frac{M}{S} = \frac{10{,}320}{1{,}500} = 6.88 \text{ in}^3,$$

where I = moment of inertia of beam cross section about neutral axis,
c = distance from neutral axis to extreme fibers,
M = external moment (inch-pounds),
and S = extreme fiber stress (pounds per square inch).

Determine timber size as follows:

For a 2 by 4,

$$\frac{I}{c} = \frac{(1/12)1.5 \times 3.5^3}{1.75} = 3.06 \text{ in}^3.$$

For a 2 by 6,

$$\frac{I}{c} = \frac{(1/12)1.5 \times 5.5^3}{2.75} = 7.56 \text{ in}^3.$$

One 2 by 6 will support the load between verticals. Figure 10 shows the load-bearing panel for the load of 1,290 lb/lin ft.

Horizontal Load Design

One can assume that horizontal loading is probably the most uncertain loading on the

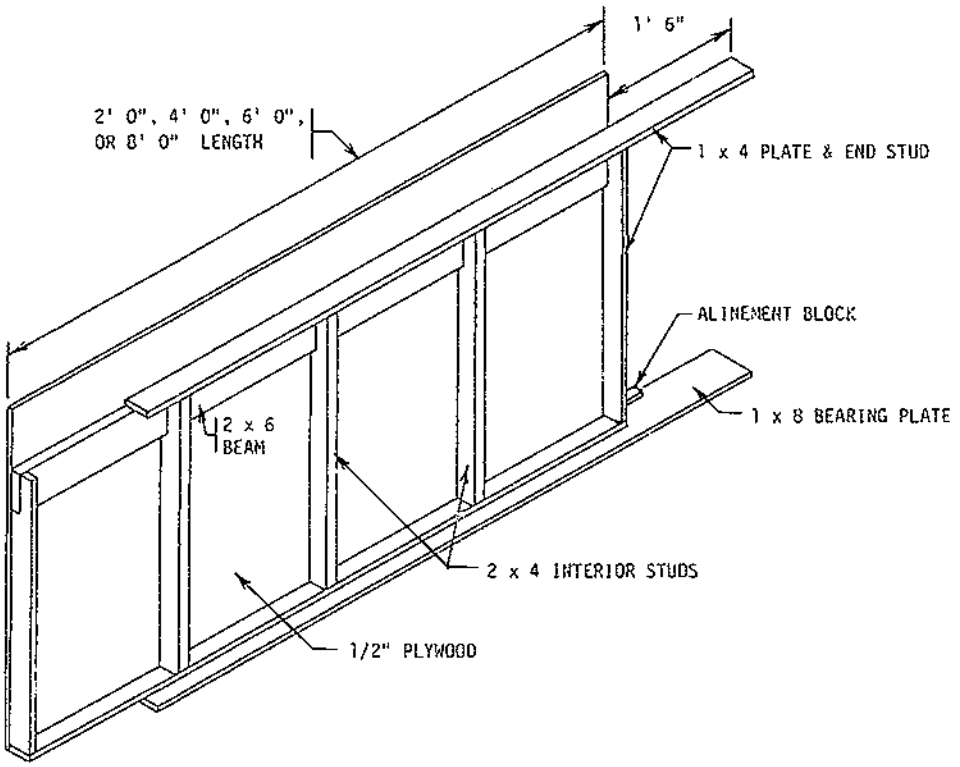

FIGURE 10.—Redesigned foundation panel for load-bearing wall.

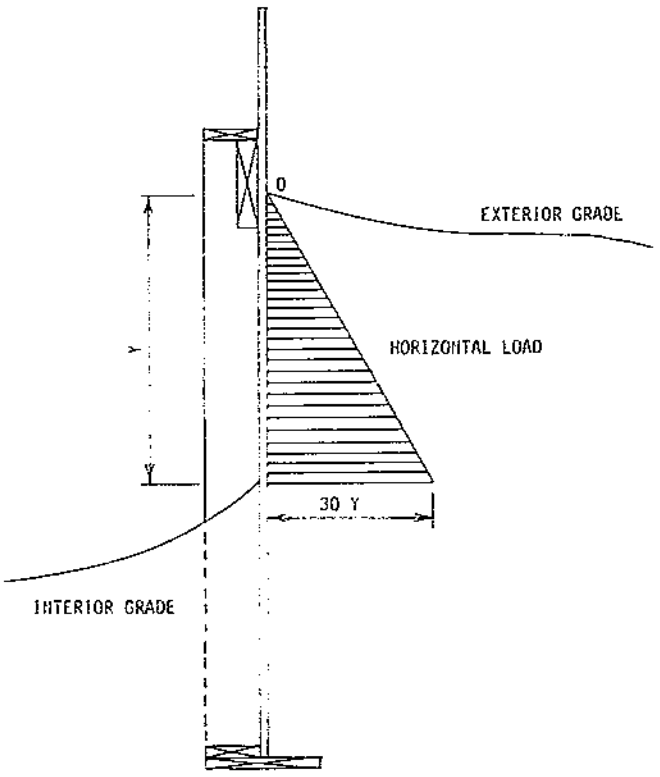

FIGURE 11.—Horizontal loading on foundation panels.

foundation panel. It varies with the depth of fill (either inside or outside), and there is the possibility that in some cases the loading may be outward instead of the usual inward loading.

A beam action between the top and bottom of the panel is required to retain the earthfill. These panels are retained at the top by the floor joists or superstructure which they support, and at least 1 foot of the panel extends below the crawl-space grade to support the bottom of the panel horizontally. In many cases, the panels will be supported by poles or other structures along the length of the wall.

Figure 11 illustrates vertical load distribution (using the liquid theory), beginning with zero

TABLE 1.—*Total horizontal load for foundation with backfill depths of 1 to 4 feet and the maximum bending moment for each depth*

Backfill depth (ft)	Load span (lb)	Total load (lb)	Maximum bending moment	
			In-lb	Ft-lb
1	0– 30	15	90	7.5
2	0– 60	60	720	60.0
3	0– 90	135	2,430	202.5
4	0–120	240	5,760	480.0

load at the ground level and increasing uniformly to the level of the backfill on the crawlspace side of the panel. Of course, if the backfill is deeper on the inside of the foundation, the panels will tend to bend outward. Table 1 gives the total horizontal load for a foundation at four backfill depths and the maximum bending moment for each depth.

For calculating stresses in vertical studs and plywood skin assume a typical 2-foot wall section.

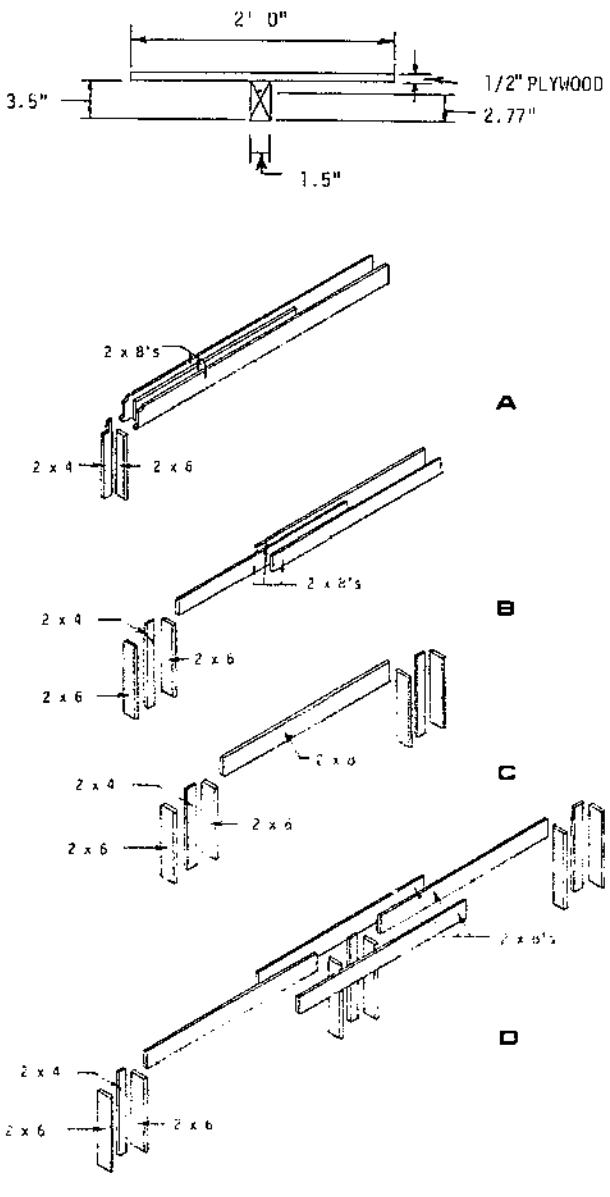

FIGURE 12.—Design of center-beam span package. *A*, End-span package. *B*, Standard-span package. *C*, Double-post, variable-span package. *D*, Triple-post, variable-span package.

According to the Plywood Design Specifications, American Plywood Association, 1966, one-half of the plywood thickness is effective. The effective width of the 24-inch section is 22 inches. Then centroid y is

$$= \frac{(0.25 \times 22)(3.75) + (3.5 \times 1.5)(1.75)}{(0.25 \times 22) + (3.5 \times 1.5)}$$

$$= \frac{20.63 + 9.19}{5.50 + 5.25} = \frac{29.82}{10.75}$$

$$= 2.77 \text{ inches.}$$

For calculating total horizontal load assume backfill to be the full 4-foot depth (3 feet is the greatest realistic depth).

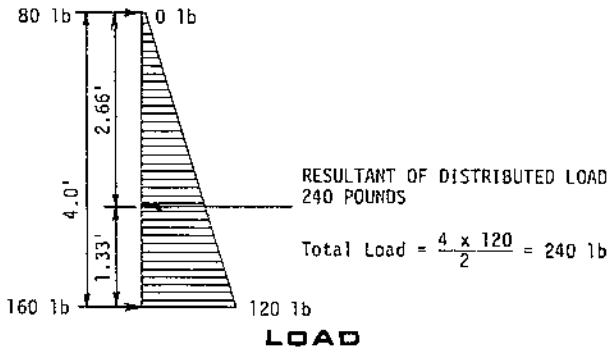

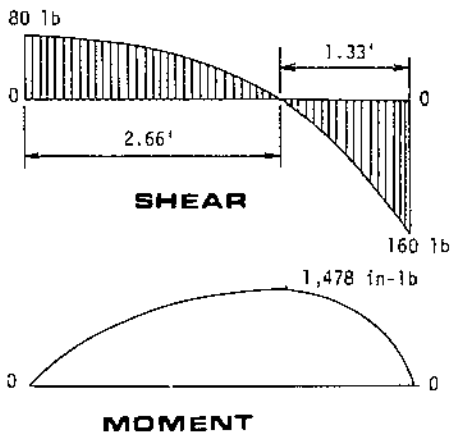

The equation for calculating the moment is from "Timber Design & Construction Handbook" by Timber Engineering Company, 1956, page 386. Calculate as follows:

Moment (M) = 0.1283wl
(0.1283) 240 × 4 = 123.168 ft-lb
or 1,478 in-lb.

Calculate the moment of inertia for the 2-foot cross section as follows:

I = (I plywood) + (I of 2 by 4 above centroid) + (I of 2 by 4 below centroid)

$I = (1/12bh^3 + bhd^2) + 1/3bh^3 + 1/3bh^3$

$$I=(1/12\times22)\,(0.25)^3+22\,(0.25)\,(1)^2+(\tfrac{1}{3}\times1.5)\,(0.73)^3+\tfrac{1}{3}\times1.5\times2.77^3$$
$$I=16.36,$$

where b=effective width of section (inches),
h=effective height of section (inch),
and d=distance from centroid of plywood to centroid of total section.

The moment to be resisted by a 2-foot length of wall is

$$M=1{,}478\times2=2{,}956 \text{ in-lb.}$$

Stress for the outside face of the plywood is

$$S=\frac{Mc}{I}=\frac{2{,}956\times1.13}{16.36}=205.98 \text{ lb/in}^2.$$

Stress for the inside face of the 2 by 4 is

$$S=\frac{Mc}{I}=\frac{2{,}956\times2.77}{16.36}=500.50 \text{ lb/in}^2.$$

Combined Stress for Compression and Bending

Combined stress for compression and bending for the outside skin of the plywood is 445.98 lb/in² compression, and for the inside face of the 2 by 4 is 9.07 lb/in² tension (500.50 minus 491.43).

According to Plywood Design Specifications, Y 510.375, published by American Plywood Association, 1975, the design stress in bending for a ½-inch C-D exterior plywood with face plies made of group 1 species of wood is 900 lb/in² if plywood is to be used under wet conditions.

STRUCTURAL DESIGN OF CENTER BEAM

In the design calculations for the center beam the floor load is 50 lb/ft² and the center beam

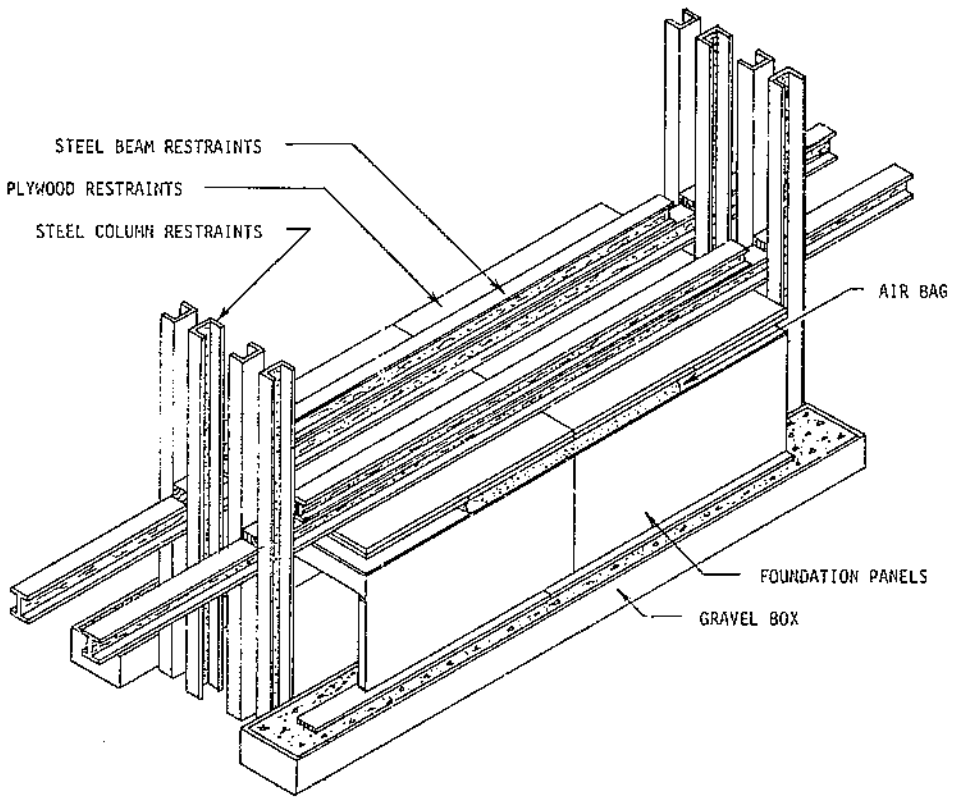

FIGURE 13.—Testing frame designed to load foundation and wall panels.

carries one-half of the floor load; then (50×32)/2=800 lb/ft. The actual span for 8-foot support spacing (on center) is 7 feet 4 inches and for 6-foot support spacing (on center) is 5 feet 4 inches.

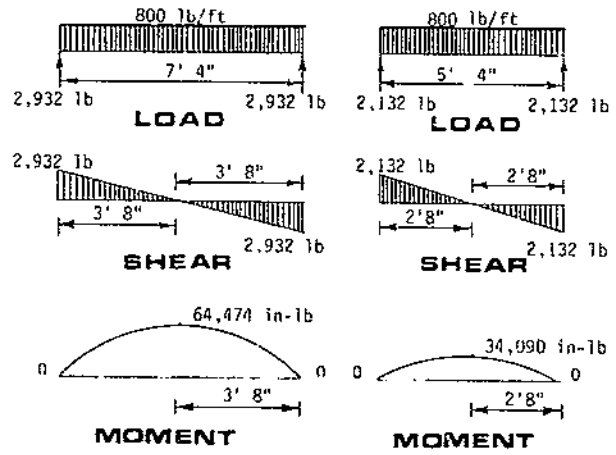

For calculating the desired section modulus assume S=1,500 lb/in². Calculate as follows:

$$\frac{I}{c}=\frac{M}{S}=\frac{64,474}{1,500}=42.98 \text{ in}^3 \text{ (8-ft spacing)}$$

and $$\frac{34,090}{1,500}=22.73 \text{ in}^3 \text{ (6-ft spacing)}.$$

In selecting timber size, I/c for a standard 2 by 8 is 14.06 in³. Since three 2 by 8's will span 8 feet and two 2 by 8's will span 6 feet, use three 2 by 8's with supports 8 feet on center. Figure 12 shows the design details for the center beam.

FOUNDATION-PANEL TESTS

Tests were designed to determine the vertical load-carrying ability of the foundation panels on several types of supports. Figure 13 shows the test apparatus with foundation panels being loaded.

Two 16-foot walls were assembled with 8-foot foundation panels in the 14-foot test frame. They were placed 6 feet apart and directly opposite each other. A floor built of 2- by 8-inch joists and ½-inch plywood spanned between the two walls and served as a mechanism for carrying the load to the walls. The load was applied by a 4- by 8-foot air bag located midway between the test walls and under the restraining frame. The air bag was inflated by compressed air. The air pressure to the bag was controlled by a variable pressure regulator (zero to 5 lb/in²), and the pressure in the bag was controlled by a manually operated bleed-off valve. Deflection was indicated by dial gages and stationary hairline indicators.

Vertical Loads on a Continuous Foundation

For the first loading, the panels were continuously supported on the concrete floor slab and were loaded in increments of 200 lb/lin ft (from zero to 1,400 lb/lin ft) with a design-load reading taken at 1,300 lb/lin ft. Dial gages were placed under the top beam of the panel midway between the vertical 2- by 4-inch studs (fig. 14). At 1,400 lb/lin ft the dial gages were removed, and the load was increased to 2,000

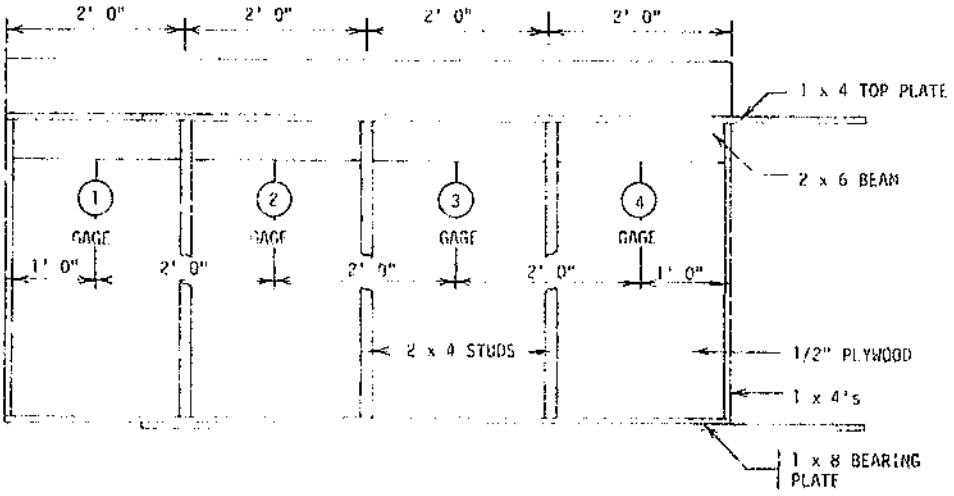

FIGURE 14.—Location of dial gages for measuring top-beam deflection.

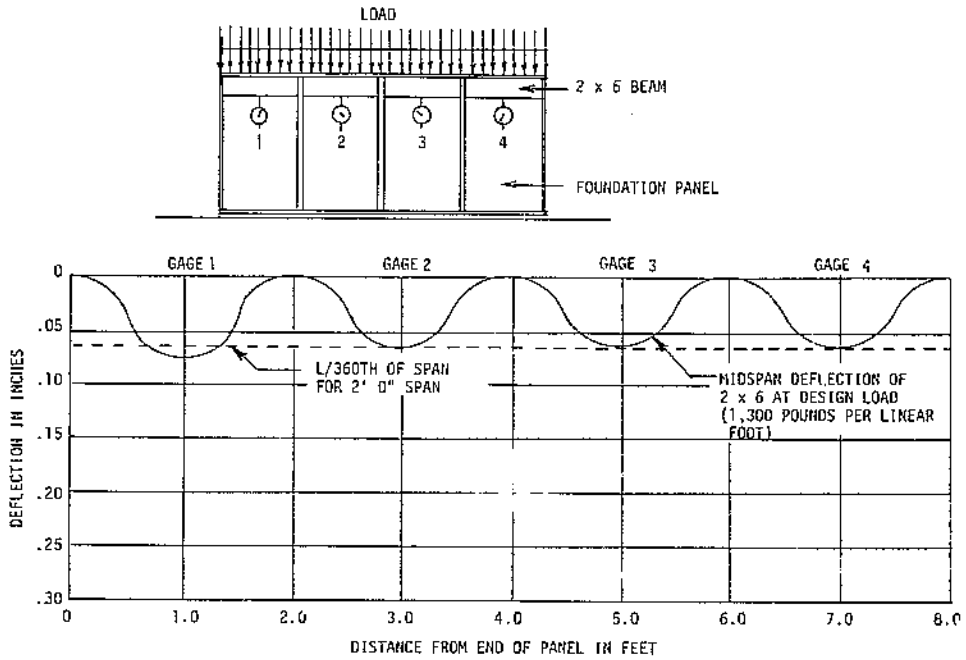

FIGURE 15.—Deflection curve for top beam of foundation panel under load of 1,300 lb/lin ft.

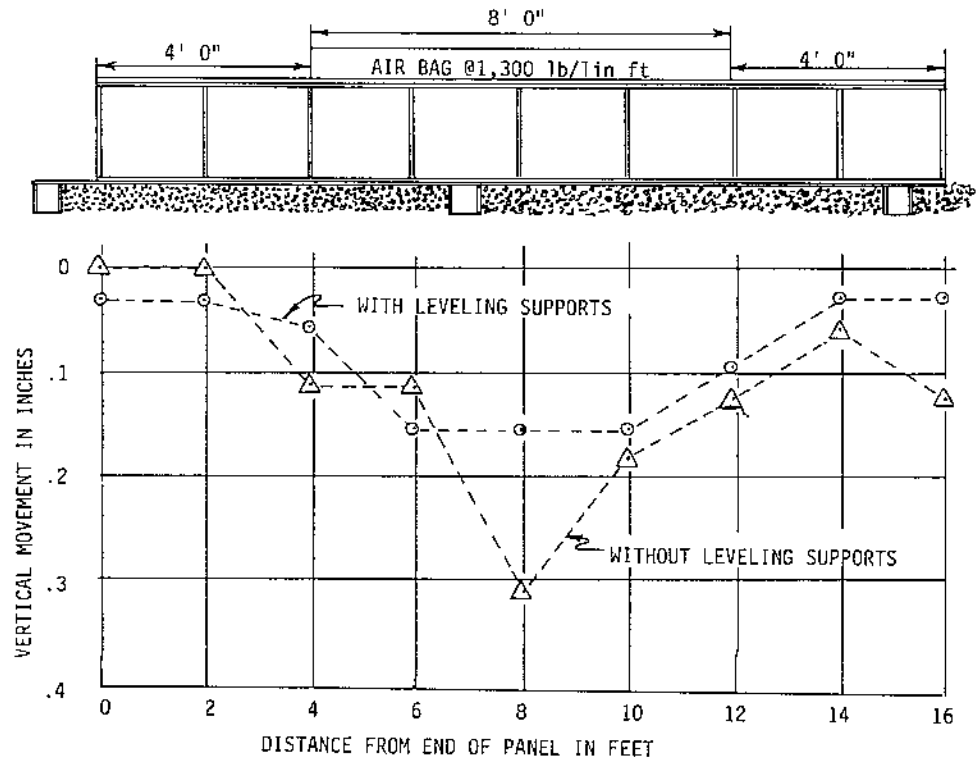

FIGURE 16.—Vertical settling curve for wood foundation on gravel fill with and without leveling supports at design load of 1,300 lb/lin ft.

lb/lin ft. Figure 15 shows the deflection curve of the top beam across the four spans at a load of 1,300 lb/lin ft. The reference line at 0.066 inch is the deflection of 1/360th of the span for the 2-foot beam length.

Settling of Panels on Crushed Rockfill

The second and third loadings were designed to determine how much (and how) the wood footing would settle when placed on an 8-inch crushed rockfill. First, the panels were supported on 8-inch concrete blocks 8 feet on center; next, a 7½-inch layer of crushed stone was poured under the footing and tamped to fill all voids. A plywood box was built under the panels to retain the crushed stone (similar to onsite conditions), and then the panels were loaded from zero to 1,400 lb/lin ft over the center 8-foot section of the 16-foot wall. The settling was measured by the movement of a hairline along a scale attached to the vertical studs. Figure 16 shows the settling curve at a load of 1,300 lb/lin ft with the leveling-block supports 8 feet on center. The maximum settling within the 8-foot loaded section was 0.16 inch for three of the five vertical studs.

For the third loading, the 8-inch leveling blocks were removed, the crushed stone was leveled, and the panels were set back in place. This time, the panel was loaded to 1,700 lb/lin ft. Figure 16 shows the curve for the load of 1,300 lb/lin ft without leveling supports. The maximum settling for this loading was 0.32 inch, or twice that of the previous test at the center of the loaded span. At other points along the panel length settling was considerably less and comparable to that of the previous loading.

Deflection of Panels As a Function of Support Location

The fourth loading was to determine the effect of uneven support for the footing, causing concentrated loads, and the relative effect of these concentrated loads at different points along the footing. The foundation panels were supported 2 feet on center, first under the vertical supports and then midway between the vertical supports.

Figure 17 is a plot of the deflection midway between supports as the load varied from zero to 1,800 lb/lin ft when supported under the studs and from zero to 1,500 lb/lin ft when supported midway between studs. Both curves show the range of values for all spans measured. A comparison of the two curves at design load shows that deflection was about twice as great when the supports were between studs, confirming that high spot (protruding stones) under the footing and between vertical supports will cause differential movement with considerably greater deflection. However, this deflection was internal to the foundation panel and thus allowed the overall panel to settle into place.

Deflection of Panels Across a Variable Span

A fifth loading was designed to determine the ability of the foundation panels to support design load across an unsupported span. The unsupported span varied from 2 to 8 feet, and the load varied from 500 to 1,500 lb/lin ft. Deflection was measured midway between supports for each loading. Figure 18 shows a plot of the deflection versus unsupported span for

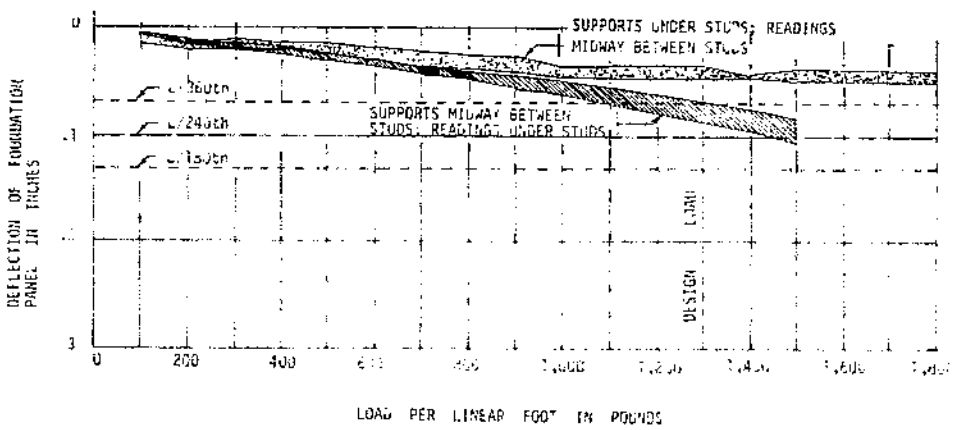

FIGURE 17.—Load versus deflection of bottom plate of foundation panel when supported under or between studs.

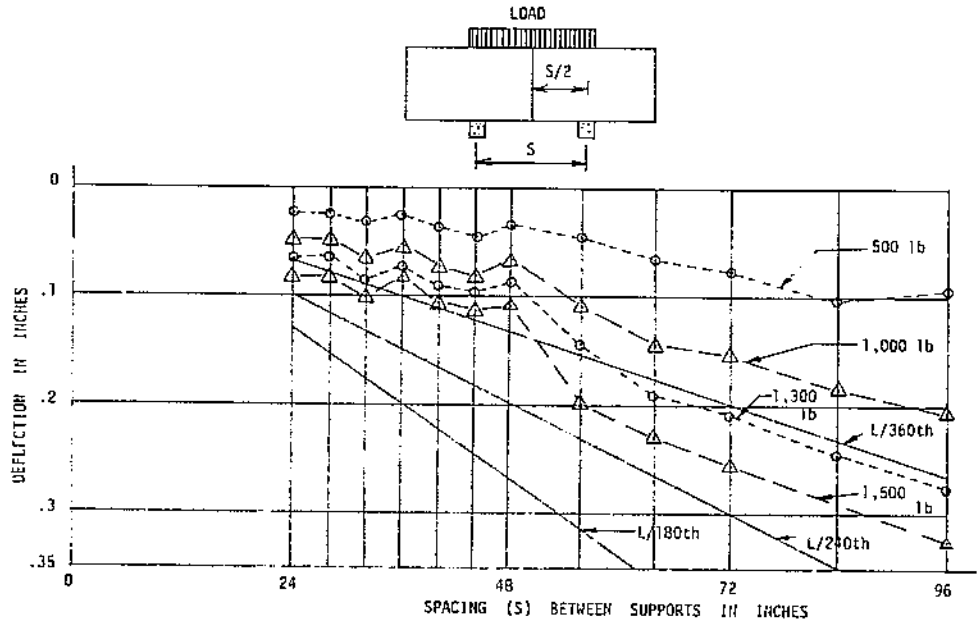

FIGURE 18.—Deflection versus spacing for four loads and for spans of 2 to 8 feet.

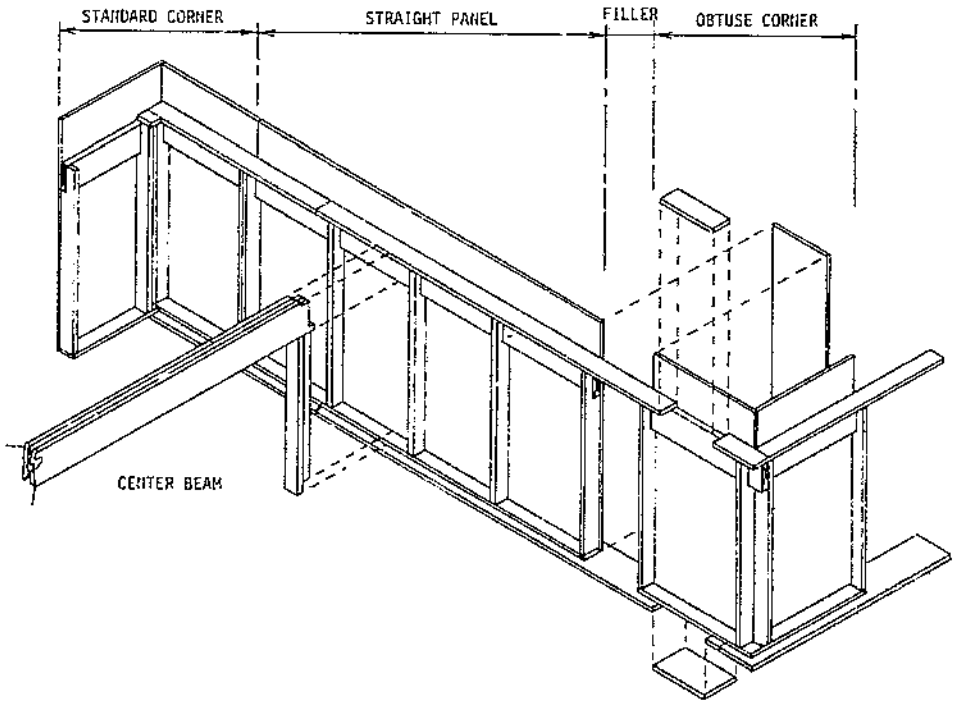

FIGURE 19.—Features of foundation panel system.

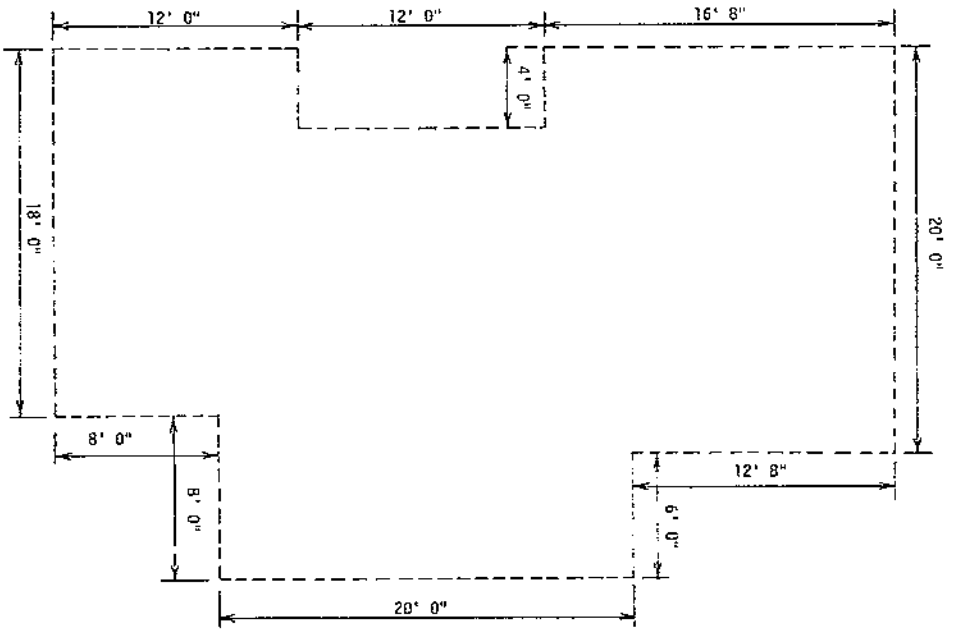

FIGURE 20.—Floor plan of typical house to be fitted with standardized panel foundation.

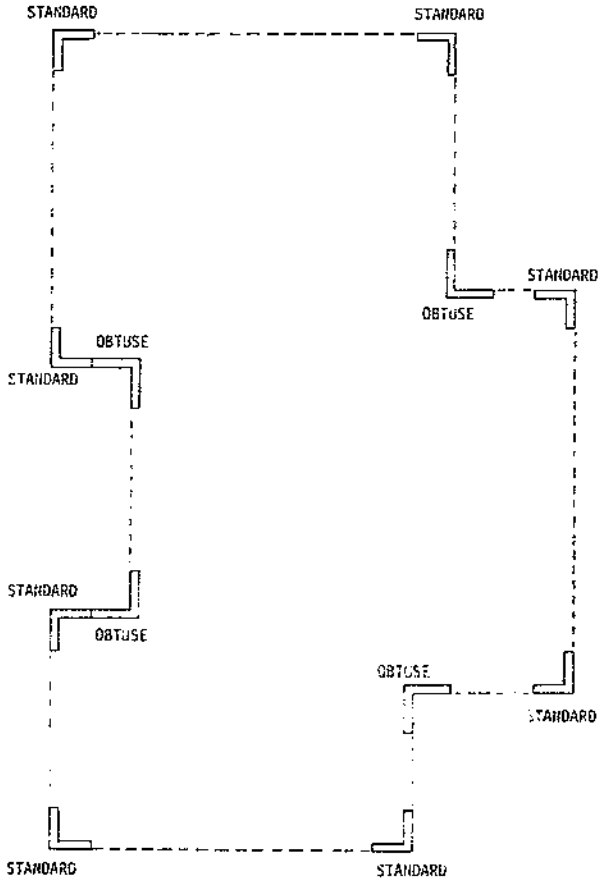

FIGURE 21.—Corner-panel placement for irregular-shaped house.

four different loadings and reveals that the beam was rigid. Under the design load of 1,300 lb/lin ft, the deflection at all spacings up to 8 feet was very close to 1/360th of the span, which is recommended for floor joists in houses.

In actual use, the occasion for an 8-foot length of panel to be unsupported would be rare, and the combination of an 8-foot unsupported length combined with full design load is even less of a possibility. In either case, the panel design tested in this series would adequately support the load.

USE CONSIDERATIONS

This standardized panel system is broad based in that it will serve the needs of self-help builders, panelized and modular dealers, mobile-home owners, and stick builders. For some uses the basic panel design may need to be altered, but in each case the same basic features of simplicity, flexibility, durability, and soundness are easily incorporated. Figure 19 is a composite showing several assembled parts of the foundation-panel system. It is simply constructed and easy to use, and the parts can be built in a factory or by self helpers.

A local dealer would need to survey the type of housing being constructed in an area to determine if load-bearing or nonload-bearing

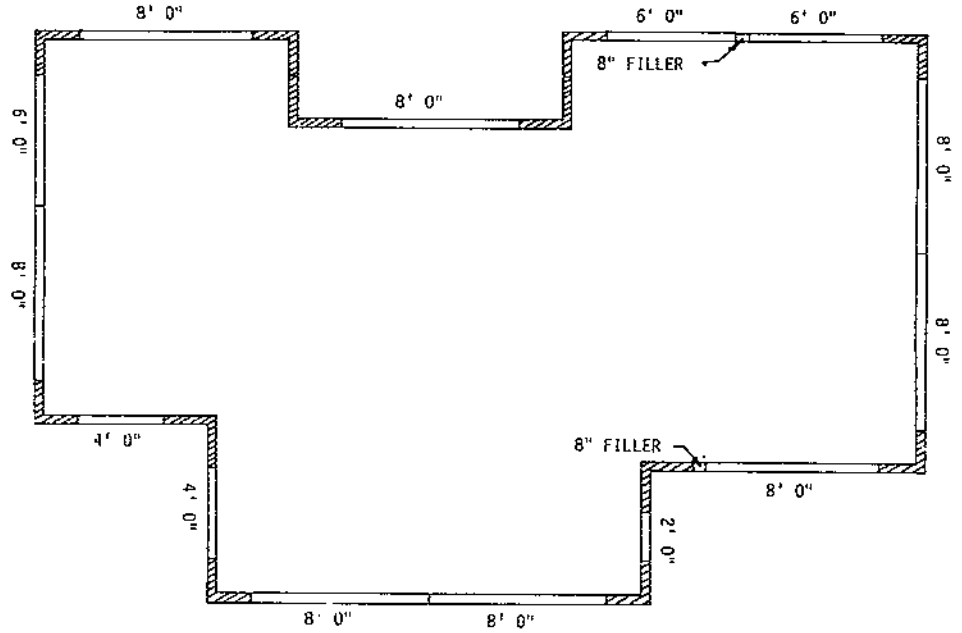

FIGURE 22.—Straight-panel and filler-strip placement for completing walls.

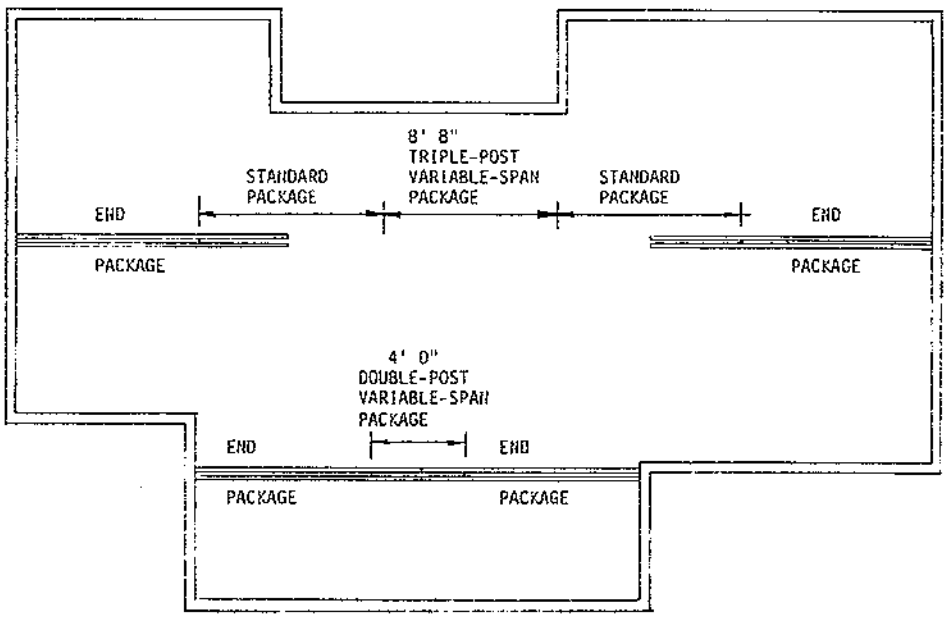

FIGURE 23.—End-span packages fitted to foundation panels to begin center-beam construction.

panels are needed and if the top beam should be countersunk. He would also need to determine the height of wall desired. He could then select the proper features and either build or stock standard parts to meet these specifications. In areas where the market is strong, more than one basic design might be stocked.

Figure 20 shows the floor plan for a typical house to be fitted with foundation panels. The corner panels are selected first (fig. 21). To satisfy the irregular shape, both standard corner panels and obtuse corner panels are needed. Then, the length of wall between corners is filled with any combination of 2-, 4-, 6-, or 8-foot straight panels (fig. 22). For both the front and back walls, 8-inch filler strips

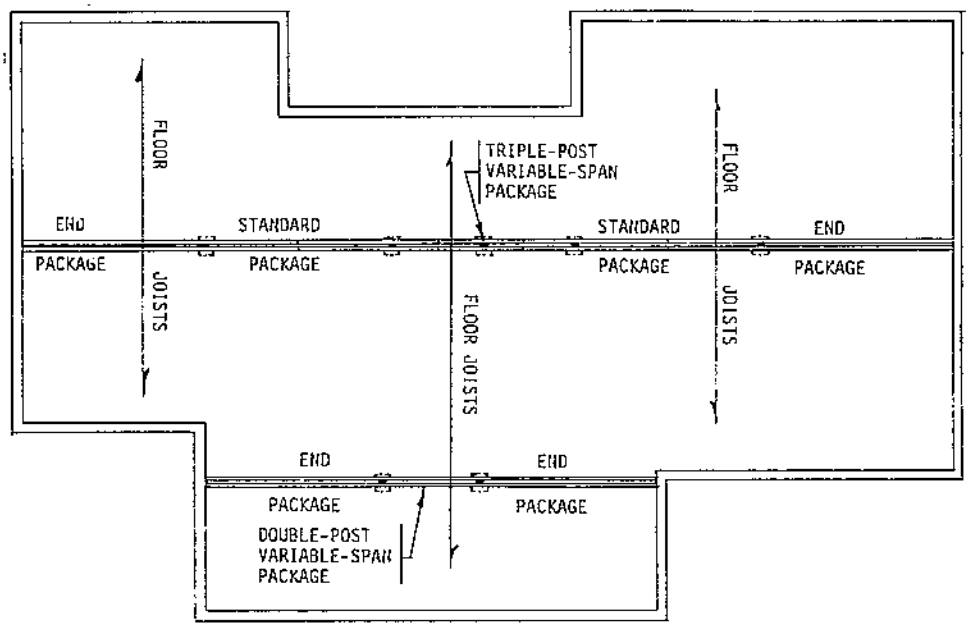

FIGURE 24.—Standard and variable span-package placement to complete center beams.

are needed to complete the length of the wall. Two center beams are needed to carry the floor joists (figs. 23 and 24). The 40⅔-foot span requires two end-span packages, two standard-span packages, and one triple-post, variable-span package. The 20-foot span requires one double-post, variable-span package and two end-span packages.

CONCLUSIONS

1. The modular foundation system is broad based and, with slight adaptations, can be satisfactory for several different types of houses.

2. With these few standard parts houses of almost any shape can be fitted with a foundation.

3. Dealers would need to store only a small number of different-shaped parts, thus avoiding the need to keep an expensive inventory.

4. During remodeling, parts can be removed and salvaged.

5. With simple jigs, self-helpers and small factories can manufacture the entire foundation system.

6. All parts can be stacked and packaged for transportation, thus making efficient use of space.

7. The parts are easily assembled and can be disassembled without damage.

8. The completed foundation is pressure treated and will have an expected life far exceeding the standard mortgage period.

9. The telescoping joints permit walls of almost any length to be fabricated from the standard parts.

10. Two major advantages of this system are the savings in onsite labor and the quickness with which the foundation can be installed.

END