AgEcon SEARCH
RESEARCH IN AGRICULTURAL & APPLIED ECONOMICS

The World's Largest Open Access Agricultural & Applied Economics Digital Library

This document is discoverable and free to researchers across the globe due to the work of AgEcon Search.

Help ensure our sustainability.

Give to AgEcon Search

AgEcon Search
http://ageconsearch.umn.edu
aesearch@umn.edu

*Papers downloaded from **AgEcon Search** may be used for non-commercial purposes and personal study only. No other use, including posting to another Internet site, is permitted without permission from the copyright owner (not AgEcon Search), or as allowed under the provisions of Fair Use, U.S. Copyright Act, Title 17 U.S.C.*

TE 1592 (1979) USDA TECHNICAL BULLETINS UPDATA

COTTON INSECT POPULATIONS: DEVELOPMENT AND IMPACT OF PREDATORS AND

EVE, R E 1 OF 1

START

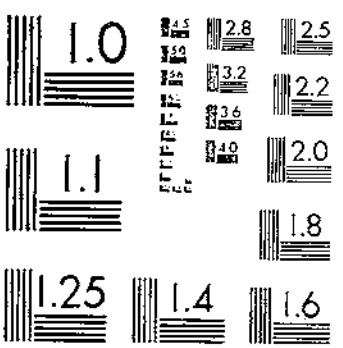

MICROCOPY RESOLUTION TEST CHART
NATIONAL BUREAU OF STANDARDS-1963-A

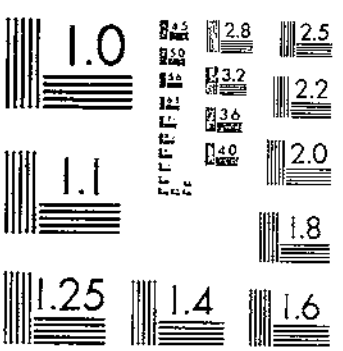

MICROCOPY RESOLUTION TEST CHART
NATIONAL BUREAU OF STANDARDS-1963-A

630 U551 # 1592

COTTON INSECT POPULATIONS

DEVELOPMENT AND IMPACT OF PREDATORS AND OTHER MORTALITY FACTORS

LOS ANGELES PUBLIC LIBRARY
OCT 2 6 1979

UNITED STATES DEPARTMENT OF AGRICULTURE

TECHNICAL BULLETIN NUMBER 1592

PREPARED BY SCIENCE AND EDUCATION ADMINISTRATION

ABSTRACT

Fye, Robert E. 1979. Cotton insect populations: Development and impact of predators and other mortality factors. U.S. Department of Agriculture, Technical Bulletin No. 1592, 65 pp., illus.

Heat input converted to physiological time units may be used to determine the development of individual pests and predators and to establish the age stratification of the populations. Plant growth, as well as the predatory activities of predators and their interrelations with target insects, is related to temperature. Thus, the host plant development and the interrelations of the crop plants with insect populations may be evaluated. In southern Arizona cotton, relatively high temperatures place stringent restrictions, including reduced fecundity and fertility, egg desiccation, high pupal losses, and impeded behavioral responses, upon the insect populations. Late in the season, the cotton plant canopy modifies the microenvironment and insect populations expand. Therefore, the summer temperature regimes occurring in southern Arizona may be considered the overriding mortality factor as well as the driving force in the behavioral and developmental subsystems of cotton insect population dynamics.

KEYWORDS: Hemipterous predators, *Hippodamia convergens, Collops vittatus, Peromyscus,* insect population model, prey index.

ACKNOWLEDGMENTS

The author gratefully acknowledges the assistance of Raymond Patana who furnished the copious amounts of prey required for the testing from the cultures of the Tucson laboratory. The many suggestions relative to technique and encouragement of D. E. Bryan and C. G. Jackson are deeply appreciated.

The efforts of Kevin Weise, Department of Systems Engineering, University of Arizona, Tucson, in fitting the curves and in developing the computer programing used in this study are gratefully acknowledged.

The technical assistance of Richard Carranza and William McAda in the biological studies, and Eugene Neemann in the field temperature studies is also gratefully acknowledged.

The author also expresses his sincere appreciation to Edward Roth and to E. L. Cockrum, Department of Ecology and Evolutionary Biology, University of Arizona, for identifying the mice and furnishing the student field data.

Issued July 1979

CONTENTS

Page

Introduction 1
Methods and materials 1
Sources of predators 1
Prey accepted 1
Prey preferred 1
Calculation of point values (PV) in the prey index profile (PIP) 2
Searching capability and interception 2
Protective sites 3
Protective sites on the cotton plant 3
Egg hatch and development of predators 5
Developmental model adjustments 5
Mouse feeding tests 5
Results and discussion 6
Sinea confusa Caudell 6
Zelus renardii Kolenati 9
Nabis alternatus Parshley 10
Collops vittatus and *Hippodamia convergens* 11
Peromyscus spp. 14
The model 16
Introduction 16
The insects 17
The developmental submodel 18
Modification of air temperature by cotton plants 18
Reciprocal units of development 18
Nutrition adjustment of RUD 18
Age stratification 19
The natality-mortality submodel 21
Initial conditions 21
Population assessments 21
Diapause 21
Oviposition site availability 21
Oviposition and egg loss 22
Egg hatch 22
Egg losses 23
Egg losses due to bioclimate 23
Egg losses to parasitism 24
Numbers of larvae 25
Larval losses to bioclimate 25
Larval losses to biotic factors 26

Page

Numbers of pupae 28
Pupal losses 29
Pupal losses to climatic factors 29
Pupal losses to cultural factors 29
Pupal losses to biotic factors 30
Adult emergence 30
Adult numbers 30
Adult losses 31
Model continuation 31
Other factors 31
Insecticide impact 31
Migration 32
Discussion 32
Conclusions 32
Literature cited 33
Appendix A 37
Table 1.—Food acceptance by hemipterous predators in close confines 37
Table 2.—Prey consumption (Prey Index Profile— PIP) by various stages of hemipterous predators 38
Table 3.—Prey preferences of predators in paired food tests 40
Table 4.—Percentage of prey captured in 24 h by various stages of hemipterous predators tested in arenas held under several light and temperature regimes 47
Table 5.—Mean numbers of predators responding each hour through holes of various sizes to coddled beet armyworm or pink bollworm egg prey 50
Table 6.—Spaces within the bracts of squares and bolls of Deltapine-16 Upland cotton 51
Table 7.—Prey acceptance by *Collops vittatus* and *Hippodamia convergens* adults in close confines 51
Table 8.—Longevity and prey consumption of adult *Collops vittatus* and *Hippodamia convergens* 52

For sale by the Superintendent of Documents, U.S. Government Printing Office
Washington, D.C. 20402

Stock Number 001-000-03977-6

CONTENTS—Continued

Page

Table 9.—Fercentage of immobile and mobile (in parentheses) prey captured in 24 h by *Collops vittatus* and *Hippodamia convergens* adults 52
Table 10.—Duration of stages of 3 hemipterous predators reared at 5 temperatures and fed live cabbage looper and beet armyworm larvae 53
Table 11.—Regression data for the transformation of temperatures to reciprocal units of development (RUD) . . . 54
Table 12.—Duration of stages of 3 hemipterous predators held at 25 °C and fed different prey 54
Table 13.—Daily consumption by *Peromyscus maniculatus* and *P. merriami* with single and paired food choices 56
Table 14.—Emergence of moths from pupae exposed to mouse predation for 24 h 56
Table 15.—Parameters for the determination of the percentage of individuals in a given instar (equations 3, 4a, b) 57
Table 16.—Regression coefficients for estimation of the modification of air temperature by the cotton plant using the linear regression equation $y=a+bx$ 58

Page

Table 17.—Most common sites occupied by cotton insects 58
Table 18.—Reciprocal units of development (RUD) for larval-pupal development for insects fed 59
Table 19.—Pertinent literature references available for population assessments and diapause of cotton pests and their predators in southern Arizona 59
Table 20.—Daily fecundity estimates with RUD as the independent variable 59
Table 21.—Parameters for the estimation of the proportions of eggs hatched 60
Table 22.—Fecundity and fertility reduction by high temperatures 60
Table 23.—Prey point values (PV) consumed daily by 3 hemipterous predators 61
Table 24.—Searching efficiency factors of individual predators paired with prey . . . 62
Table 25.—Potential survival of pupating insects after cultivation of cotton 62
Appendix B 63
Reciprocal unit of development accumulation program 63

COTTON INSECT POPULATIONS

DEVELOPMENT AND IMPACT OF PREDATORS AND OTHER MORTALITY FACTORS

By R. E. Fye[1]

INTRODUCTION

The interpretation of results from field experiments with biological control agents for pest species requires that the impact of naturally occurring mortality factors be assessed so their action may be separated from that of the introduced biological control organism (*22*).[2] Likewise, in decisions on controls to be applied to pest species, it is necessary to evaluate the potential action of naturally occurring predators and parasites that may be adequate to control the pest without applying additional control measures. The following laboratory studies of *Sinea confusa* Caudell, *Zelus renardii* Kolenati, *Nabis alternatus* Parshley, *Collops vittatus* (Say), and *Hippodamia convergens* Guérin-Méneville, predators common in Arizona cottonfields, were made to develop basic information on the predatory activities of these species and relate it to field populations.

METHODS AND MATERIALS

Sources of Predators

The predators were collected from cotton, alfalfa, and grain sorghum in the vicinity of Tucson, Ariz. The tests with *Collops*, *Hippodamia*, and *Nabis* adults were conducted with field-collected insects. Tests with the nymphal stages employed insects reared from the field-collected adults with the methods that utilize coddled beet armyworm larvae as the basic food (*11*). Small nabid nymphs were fed pink bollworm eggs; in the later instars, aphids and the coddled larvae were fed.

Prey Accepted

Various stages of potential prey found in cotton were offered to the nymphs and the adults. The potential prey and the nymphs or adults were introduced into 3.5-cm diameter petri dishes with a 1.5-cm slice of green bean for moisture, and after 24 hours, the feeding by the predator on the proffered prey was noted. The tests were maintained under continuous light of fluorescent lamps at 25° Celsius.

Prey Preferred

When the results from the test to determine the acceptable foods were known, representative accepted foods were paired and offered at the same

[1]Research entomologist, Science and Education Administration, Yakima Agricultural Research Laboratory, Yakima, Wash. 98902.

[2]Italic numbers in parentheses refer to Literature Cited, p. 33.

time to a single predator in a 9-cm plastic petri dish. For the later instars of the larger predators, a 14-cm diameter plastic petri dish was employed as a test chamber. Equal numbers of the two species of prey were placed on a suitable substrate, usually a 1.0-cm slice of green bean. When mobile predators such as lygus bugs were proffered, several small slices of green bean were included to provide moisture but not protective sites. When the cotton leafperforator was one of the prey, tests were conducted in 1.5-oz clear plastic creamer sups with tight plastic lids, and the alternate prey were placed on excised cotton cotyledons. Numbers of prey in excess of the normal daily consumption of the predator were proffered for a 24-h period; however, shorter periods were employed if the larger predators consumed inordinately large numbers of prey. Test receptacles were held under fluorescent lamps at a temperature of 25° C.

Calculation of Point Values (PV) in the Prey Index Profile (PIP)

The prey of the predators will necessarily have different nutritional or satiation values because of variation in size and quality. Therefore, to reconcile these differences each prey must be assigned a point value (PV). The standard PV of 1 was assigned to cabbage looper eggs. The PV for other prey may then be calculated:

$$PV_A = \frac{1}{(\text{number of } A \text{ eaten})/\text{number of } CLE \text{ eaten}}$$

where:

PV = the assigned point value

A = the species and size of prey

CLE = cabbage looper eggs

If the particular prey was fed during several instars, the individual PV's for the several instars were adjusted to a common PV for convenience.

If cabbage looper eggs were not fed to a particular stage of predator, the PV was determined from the total PV of a prey with a known PV eaten by that stage. For example, assume 20 prey with a known PV of 2 were eaten during a given stage; thus, 40 PV were consumed. If 30 prey with an unknown value were eaten during the same stage, the PV of the unknown value were eaten during the same stage, the PV of the unknown is calculated as 1.3. Such a procedure was possible because the same stage of prey was fed to several stages of each predator species.

Searching Capability and Interception

The basic searching capability of the individual predators was determined in flat arenas with a confining wall of no more than 1.5 cm. A 14-cm-diameter plastic petri dish with an area of 409 cm^2 was used as the smallest arena. The arena with 881 cm^2 consisted of a round pizza pan edged with a soft sponge weatherstripping, floored with a paper sheet, and covered with a glass plate. Arenas with an area of 1,367 cm^2, 3,302 cm^2, 5,160 cm^2, and 7,430 cm^2 consisted of squares of plywood edged with the soft sponge weatherstripping material with a thickness of 1.5 cm and covered with a glass pane. Arenas with an area of 2,136 cm^2 were constructed from oblong cookie sheets rimmed with the soft, spongy weatherstripping, floored with a paper sheet, and covered with a glass plate. For the test, two 1.5-cm slices of green bean were placed at various points (usually two) in the arenas and a single prey was introduced. The predator was introduced, and the arena was maintained for 24 h and then examined for feeding by the predator. If the predator died or molted during the 24 h period, the test was disregarded. From 10 to 12 successfully completed tests were made at 20° C and 12 h fluorescent light, 12 h dark, at 25° and light:dark (L-D) periods of 12:12 and 14:10 h and at 30° with L-D of 12:12 and 14:10 h. Insects from each nymphal stage and adults were tested against the nymphal stage of *Lygus* (a mobile prey) or cabbage looper larvae (a relatively inactive prey) most preferred by that particular instar in the acceptance tests.

Artificial plants, constructed from squares of file folders (to serve as artificial leaves) and wooden dowels (to serve as limbs and stems), served as arenas to test the searching capability under more complex configurations (fig. 1). The "plants" were suspended in a small greenhouse with 8-lb test nylon fishing leader on which an 11-cm plastic disk was suspended to discourage

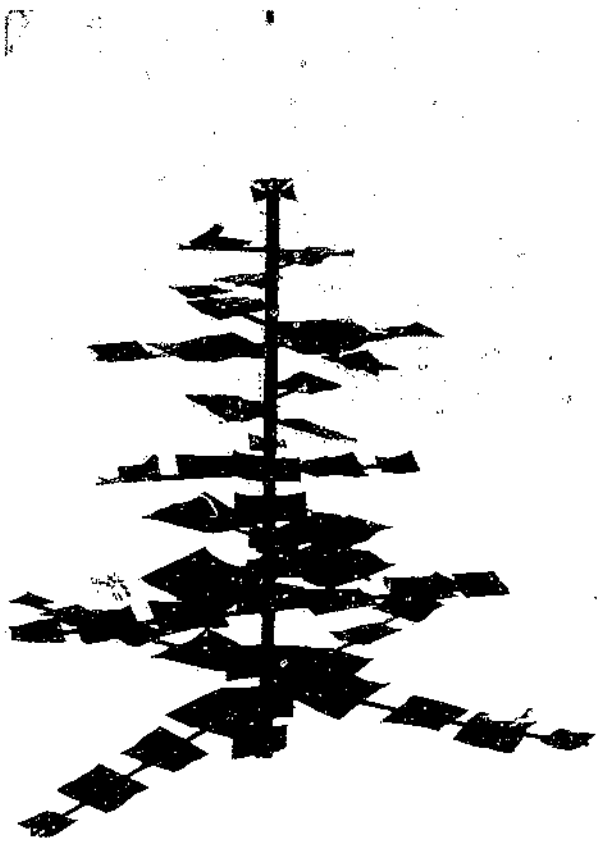

FIGURE 1.—Artificial cotton plant with an area of 5,824 cm².

the predators from leaving the plants. The area of the plants was equivalent to the actual area of living cotton plants as determined by Surber et al. (*70*). The limbs and leaves were placed so that they initiated at the proper level of the plant, but the limbs were left in a horizontal position rather than tilted upward as in a natural plant. The greenhouse temperatures were cycled daily with a low of about 20° C and a high of about 35°. Some daily cycles did not reach the 35° peak, but generally exceeded 30°. The tests on the artificial plants were conducted for 24 h with the natural daylight being supplemented by fluorescent lights to extend the days to 14:10 h L-D. Four sizes of plants were used, 30 cm in height with an area of 1,118 cm², 45 cm in height and 3,102 cm², 60 cm in height and 5,824 cm², and 105 cm in height and 11,325 cm².

Protective Sites

Laboratory studies of the protective sites penetrable by each stage of the four predators were made by placing a single coddled beet armyworm or pink bollworm eggs in the center of a filter paper circle in a 14-cm petri dish. The eggs or larvae were covered with an inverted 9-cm diameter petri dish in which three holes of the desired size had been bored at the periphery. The holes in the 9-cm petri dishes were varied in size, and, by employing the dishes with increasing size of holes successively, the smallest hole through which the predators could penetrate was determined. Five predators were then introduced into the larger petri dish and the cover was replaced. The penetration of the predators through the holes in the edge of the petri dish was checked at hourly intervals for 6 or 7 succeeding hours. The tests were conducted at 25° C under fluorescent light.

Protective Sites on the Cotton Plant

More than 100 squares and bolls on Deltapine-16 cotton plants were measured during the summer of 1973 to determine the size of spaces between the bracts and the fruit that are available for habitation by the predators and prey in the cottonfield. The measurements made are indicated in figure 2.

For the calculation of actual volumes of the various spaces, the space at the tip of the square or small boll was considered to be a three-sided regular pyramid. The volume of this space may calculated with the formula:

$$V = 1/3\ h\ a \qquad \text{(a)}$$

where:

h = height of the pyramid (*A*, fig. 2) and

a = the area of the base.

The area of the base may be calculated with the mensuration formula:

$$\text{Area} = 1/4\ s^2\sqrt{3} \qquad \text{(b)}$$

where:

s = the length of a side (*V*, fig. 2)

For practical purposes, the volume surrounding the tip of the square boll may be considered the frustum of a right circular cone with the volume of the square tip, a paraboid in revolution, subtracted. The volume of this frustum may be calculated with the mensuration formula:

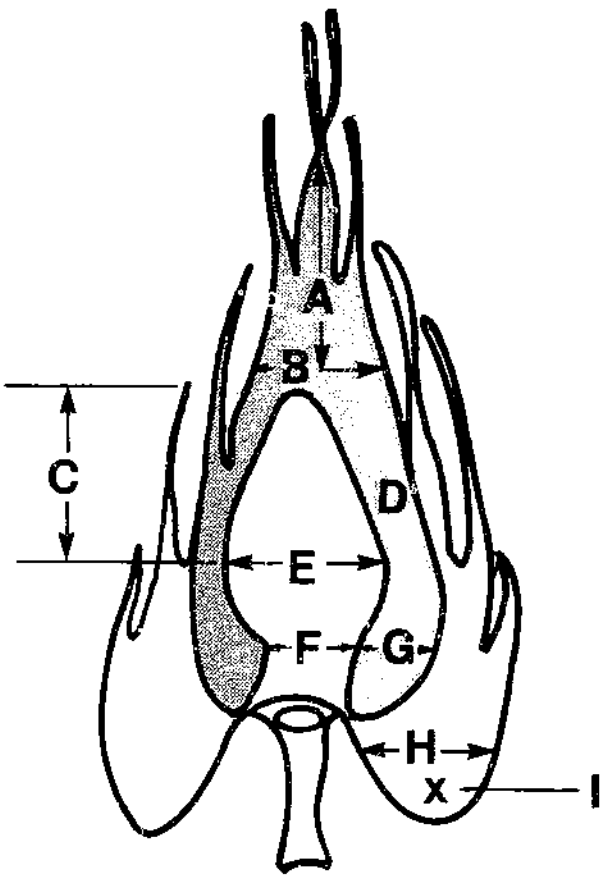

FIGURE 2.—Diagram of a cotton square showing locations of measurements in the mensuration equations a-f. (*I* designates the length of the semicylindrical space between adjacent bract lobes.)

$$V = \pi \frac{h}{3}(r_1 + r_1 r_2 + r_2) - \frac{\pi}{2} h r_3^2 \qquad \text{(c)}$$

where:

$r_1 = \frac{E}{2} + D$

$r_2 = \frac{B}{2}$

$r_3 = \frac{E}{2}$

$h = C$. (B, C, D, and E refer to fig. 2)

The volume around the base of the square or boll may be considered a torus of a rotating circle with a diameter of G (fig. 2). The volume of the torus may be calculated with the mensuration formula:

$$V = 2\pi^2 R r^2 \qquad \text{(d)}$$

where:

R = radius of the center gravity to center of rotation

r^2 = radius of the rotating circle

$\therefore R = \frac{F}{2} + \frac{G}{2}$

$r = \frac{G}{2}$ (F and G refer to fig. 2)

The space associated with the lower lobe of the square bract may be considered a semicylinder with the diameter of H, and a height of I, which is the space between the two bract lobes. Thus, the volume of this space may be calculated by the formula:

$$V = \frac{1}{2\pi r^2 h} \qquad \text{(e)}$$

where:

$r = \frac{H}{2}$ (H refers to fig. 2)

$h = I$ (I refers to fig. 2)

At each edge of the bracts, three triangular prismoidal spaces with the length C (fig. 2) replace the cone frustum in older squares and vary proportionally to the size of the squares or bolls. The height and base of the base triangle of the prismoid are equal to the square diameter (E, fig. 2). The volumes of these prismoids may be calculated:

$$V = 3\frac{E^2}{2}C \qquad \text{(f)}$$

where:

E^2= the area times the height of the base triangle

C= the length of the prismoid (C refers fig. 2)

3= the common number present for square

For the purposes of this discussion, only the ranges and modes were determined.

Egg Hatch and Development of Predators

Freshly deposited eggs were removed from the cultures described above and placed in five different temperature and L-D regimes, that is, 15° C, 12:12; 20°, 12:12; 25°, 14:10; 30°, 14:10; and 33°, 14:10. The eggs were checked at 4-h intervals until hatch was complete.

Newly hatched nymphs of the three predators were placed in the five temperature L-D regimes noted above. The nymphs were fed either small cabbage looper or beet armyworm larvae or pink bollworm eggs. In the later instars, only larger cabbage looper larvae were used as prey. The prey were placed in the 3.5-cm diameter petri dishes in numbers in excess of the daily demands of the predators. The predators were checked daily to determine when the molts occurred. From these data, linear regression lines for the reciprocal units of development for the three species were developed (*37, 38*).

Developmental Model Adjustments

In the laboratory feeding test conducted at 25° C and 14:10 h L-D, 60 newly hatched bollworms were placed on diets of cotton squares, cotton bolls, and lima bean diet (*59*). Tobacco budworms and beet armyworms were fed on the same diets, but an additional set of 60 of these insects was fed upon fresh cotton leaves. Cabbage loopers and saltmarsh caterpillars were fed on fresh cotton leaves and the lima bean diet. All the larvae were progeny hatched from eggs obtained from moths captured in light traps in Tucson. The cotton bolls and squares were replaced every other day as were the leaves that were caged in 1-oz creamer cup cages similar to those described by Fye and May (*36*). At the same time the foods were changed, the condition of the larvae was observed and the date of pupation was recorded.

Newly hatched bollworms, tobacco budworms, beet armyworms, cabbage loopers, and saltmarsh caterpillars from the Tucson Cotton Insects Biological Control Laboratory culture were placed on cotton plants in the greenhouse. When the plants could no longer support the larvae, the larvae were moved to new plants. As the larvae approached pupation, trays of vermiculite were placed beneath the plants for a pupation medium. After pupation had occured, these pupae were separated and placed in a shaded spot in the greenhouse until emergence of the adults occurred. Records of the pupation date and the emergence date were maintained along with a continuous temperature record for the greenhouse.

In the field, small groups of cotton plants were formed by removing plants on either end of the group and assuring that the branches did not reach the adjacent row or plants in the row. Newly hatched larvae of bollworms, tobacco budworms, beet armyworms, cabbage loopers, and saltmarsh caterpillars were placed on the small groups of plants throughout the summer. After about 10 days on the plant, the surviving larvae were moved to the insectary where they continued to feed on the plants parts on which they were found in the field. Thus, some bollworms and budworms were fed either squares or bolls, beet armyworms were fed either leaves or small bolls, and cabbage loopers and saltmarsh caterpillars were fed leaves. The larvae transferred to the insectary were maintained in individual cages, and the date of pupation was recorded. The pupae were checked three times weekly to determine when the adults emerged. Continuous temperature records were made in the field and in the insectary.

Mouse Feeding Tests

The mice employed in the feeding tests were trapped near cotton fields at Robles Junction, Ariz., during November 1975 and January 1976. After a stabilization period of several days, during which the mice were fed grain sorghum and water, the testing was begun.

The cages were 23 cm wide by 34.5 cm long by 19 cm high, constructed from 6-mm mesh hardware cloth, had a 26-cm-wide by 34-cm-long by 8.5-cm-deep plastic sweater box as a base. A 10-cm-wide by 10-cm-long by 7.5-cm-deep plastic storage box filled with cotton fiber was suspended in the corner of the cage for a nesting box.

Each mouse in the series was offered a diet of grain sorghum, thrashed mesquite beans (*Prosopis* sp.), beet armyworm (*Spodoptera*

exigua (Hübner)) pupae, and tobacco budworm (*Heliothis virescens* (F.)) pupae. The grain sorghum was commercial feed sorghum; the mesquite beans were thrashed from the pods with a blender and then sieved to eliminate the pod material; and the beet armyworm and tobacco budworm pupae were cultured with the methods described by Patana (*59*) and Patana and McAda (*60*). On each test date, a weighed amount of food was introduced into the cage in a 1-oz plastic cup, and the nocturnal mice were allowed to feed overnight. The remaining material was collected and weighed, and the daily consumption was calculated. The dry weights of several lots of 50 fresh beet armyworm or 25 tobacco budworm pupae were determined. The pupae were removed from the culture medium, held for 3 days, then weighed and placed in an oven until a stable, dry weight was obtained. The mice were also given a choice between the grain sorghum plus mesquite beans, sorghum plus beet armyworm pupae, and sorghum plus tobacco budworm pupae. The tests were conducted in a similar manner with weighed portions proffered daily with the remainder being determined after 24 h of feeding. Each daily feeding was considered a replicate, and at least 13 daily feedings of sorghum alone, 9 of mesquite beans, 11 of beet armyworm pupae, and 11 of tobacco budworm pupae were made. With each mouse, 4 to 40 replicates of each grain-insect pupae choice test were also made. The tests were conducted in a greenhouse with temperatures cycling between 20° and 35° C daily.

The ability of the mice to remove naturally pupated insects from the soil was determined by allowing the prepupae of beet armyworms, tobacco budworms, and pink bollworms, (*Pectinophora gossypiella* (Saunders)), to pupate naturally in the soil in the plastic sweater boxes. The test cages for the mice fit into the tops of the plastic sweater boxes. The test cages for the mice fit into the tops of the plastic sweater boxes and the entire soil surface was exposed to the mouse activity. For each replicate, 25 tobacco budworm or 50 beet armyworm or pink bollworm prepupae were allowed to pupate in the soil, but dry cotton leaves were incorporated in the surface of the pink bollworm study boxes to simulate pupation conditions in the centers of cotton rows in the field (*30*). After pupation occurred (about 5 days after the prepupae were introduced), the mouse cages were placed over the boxes containing the pupae, and the mice were allowed to dig for the pupae during their normal nocturnal feeding period. At the conclusion of the 24-h test period, the boxes were covered and held in the same greenhouse under the same temperatures for 3 weeks. The moth emergence from the soil was then determined, and the reduction due to the mice was computed.

The cultivated condition of soil normally occurring in the field was simulated by placing 25 5-day-old tobacco budworm pupae on a soil covering in the bottom of the exposure boxes. The pupae were then covered with 7 cm of moist soil sieved through a 1-cm mesh. The buried pupae were then exposed to the mouse feeding as described, and the holding and inspection procedures were repeated.

RESULTS AND DISCUSSION

Sinea confusa Caudell

Prey accepted.—The *Sinea* fed readily upon all stages of *Lygus* (table 1)[3]; as long as the size of the prey did not exceed the size of the predator, the percentage of acceptance was very high. Cotton aphids, *Aphis gossypii* Glov., were fed upon more readily by the smaller nymphs, but the larger nymphs apparently did not accept, or were unable to handle, the small aphids. Bollworm, *Heliothis zea* Boddie, eggs were not fed upon readily by the *Sinea* nymphs; however, once the eggs were hatched, the nymphs readily fed upon the various larval stages of the bollworm as long as the prey size was not excessive in relation to the size of the predator. The results with cabbage looper, *Trichoplusia ni* (Hübner), eggs and larvae were similar to the results with bollworm although the cabbage loopers were fed upon more readily than the relatively more aggressive bollworms. Eggs

[3]For the readers' convenience, all tables appear at the end of this report as indicated in the Contents.

of the pink bollworm were not fed upon readily, but small numbers were eaten by the three smallest nymphal instars. The fourth and fifth instar larvae of the cotton leafperforator, *Bucculatrix thurberiella* Busck (77), were readily fed upon by all sizes of the *S. confusa*. Thus, the *S. confusa* fed on a variety of prey and showed a preference for the moving forms in contrast to the immobile egg stage.

Nymphs and adults of *Geocoris punctipes* (Say) were also included in the food acceptance tests as a representative predator common in cotton in Arizona. Generally, the *S. confusa* nymphs and adults were more aggressive than the *G. punctipes*, and as long as the size of the predator and prey was similar, the *Sinea* nymphs fed upon the *Geocoris* nymphs. However, the larger *Sinea* nymphs failed to feed on the smaller *Geocoris*, possibly due to their inability to detect or handle the tiny nymphs.

Prey consumption.—The consumption by *Sinea confusa* of several species of prey common in cotton in southern Arizona is presented in table 2. Generally, the feeding by the predators in the several instars was proportionate to the size of the prey and the predator. The major departure is the feeding of fourth instar *S. confusa* nymphs on the fourth instar pink bollworms. The feeding was erratic, and, in one case, a single predator passed through the instar feeding on only one pink bollworm. Therefore, the high PV attached to pink bollworms should be considered with reservations. The first instar nymphs failed to feed successfully on bollworm and pink bollworm eggs and did not survive to the second instar. Zero to four bollworm eggs were eaten and 0 to 14 pink bollworm eggs, and the nymphs lived 3 to 9 days and 14 to 12 days, respectively. Satisfactory results were obtained with cabbage looper eggs (table 2).

The estimates of PV's consumed are reasonably consistent, and the total points consumed during each instar fall in between the values calculated by using the standard deviations as a broad confidence interval. A great deal of variability is to be expected due to the considerable variability of time spent in each instar. Daily consumption was relatively constant except for the days immediately prior to and succeeding the molt. Therefore, during the briefer instars, fewer prey were eaten; during the longer instars, more individuals were consumed. In most cases, the succeeding instars were either shorter or longer, and the overall developmental period remained reasonably consistent.

The preferences of the *S. confusa* (table 3) are more difficult to interpret. If the number of tests in which a predator demonstrated a preference by the numbers eaten is used, satiation during the test period is relegated to a minor role. For example, if a larger prey of the paired prey was encountered first, the satiation following the feeding may have deferred further feeding. To overcome this difficulty, the total number of prey points eaten during the tests places the two prey on a more even basis. In some instances, the use of the PV consumed reverses an apparent preference for one species in favor of the other. Likewise, if the numbers of each prey consumed throughout the tests are used, apparent equal prey consumption frequently may not provide a true preference designation. By the techniques employed, only relatively complete acceptance or disregard for a particular size and species of prey can be noted. Throughout the tests, it was evident that when an acceptable and manageable prey was encountered and the predator was hungry, the predator proceeded to feed.

Generally, the first instar nymphs of *S. confusa* demonstrated no clearly defined prey preferences (table 3). The second instar nymphs demonstrated a single preference for second instar bollworm larvae over third instar larvae. This may be attributed to the larger unmanageable size of the third bollworms in conjunction with a marked aggressiveness by the prey. Only bollworm and pink bollworm eggs were rejected by the third instar nymphs. This corroborates the data obtained in the feeding tests, in which the first instar nymphs could not be reared when fed the eggs of these two species. The fourth instar nymphs also rejected bollworm eggs but fed on cabbage looper eggs that were also readily fed upon by the younger nymphs. The fifth instar nymphs and adults showed no marked preferences or rejections among the proffered prey.

Searching capability and interception.—All nymphal stages of the *S. confusa* were highly successful in capturing the relatively immobile cabbage loopers in the smaller arenas (table 4); however, when compared with the smaller nymphs, the larger nymphs and adult, *S. confusa* were

[illegible]

less aggressive and therefore less successful in the larger arenas. There was a similar pattern of capture of the more mobile *Lygus* prey, but the *Lygus* escaped capture by the larger nymphs and adults more frequently. The number of captures also declined in the larger arenas. Captures of the *Lygus* were also somewhat lower in the 20° C regimen, particularly when paired with the larger *Lygus* nymphs and adults. However, the relatively erratic data indicate that a number of additional factors, particularly the age of the nymph in regard to the next molt, must be considered if a refined capture model is to be elaborated.

Success of the nymphs against cabbage looper and lygus bugs on the more complex, simulated plants was similar. On the larger plants, the small number captured and the inability to utilize the simulated plants indicate that the mobile *Lygus* were able to avoid the predator attack by dropping from the plant, a phenomenon that was observed during the tests.

Protective sites.—First instar nymphs of *S. confusa* were able to enter the food chamber through holes 3 mm in diameter and readily entered through holes larger than 3 mm (table 5). A single, second instar nymph entered the food chamber through a 2-mm and a 3-mm hole, and the remainder readily entered into holes of a larger diameter. Nymphs in the third and fourth instar passed through 3-mm holes and larger, and nymphs in the fifth instar passed through 4-mm holes. The larger more cumbersome adults required 6-mm holes for entrance. The data indicate that certain individuals, probably males of a given nymph stage, are small and can penetrate into sites that the majority cannot. The data in table 6 indicate that the smaller nymphs of *S confusa* may enter many of the protective sites throughout the cotton plant.

Protective sites on the cotton plant.—The data on the spaces within the bracts of squares and bolls of Deltapine-16 cotton are presented in table 6. All the measurements were quite variable, but are representative of the spaces that are available as protective sites for the potential prey in the cottonfield.

A site seldom occupied during the early growth of the square is the triangular pyramid in the tips of the bract (fig. 2, *A-B*). During early growth, the bracts are tightly knit along the edges and the space is difficult to penetrate; however, as the square matures, the space becomes larger until the petal portion of the square elongates for blossoming of the cotton. When the petals fall, usually 10 to 15 days after bloom, the space is again available, but as the boll matures and penetrates through the tip of the bracts, the space again disappears. Space around the upper portion of the square of boll (fig. 2, *D*) is often nonexistent as the bracts press against the side of the square of boll and frequently permit entrance to only small insects or those with a flat profile. At the corners of the square where the bract's edges meet, a triangular prismoidal configuration serves as a protective site for many insects. In effect, the space surrounding the tip of the square or young boll is the hollow frustum of a cone with the three prismoidal spaces at each of the three or four corners.

The most common site occupied by insects and spiders is the torus (fig. 2, *G*) with a variable diameter. In bolls, the hemispherical configuration of the base usually depresses the torus, resulting in a very small space, and therefore, is a more commonly used protective site in squares than in bolls. The space between the lower lobes of the square bracts, designated *I* in figure 2, is another common protective site, particularly for webbing spiders. The space also serves as a path of ingress by the insects penetrating the lower spaces surrounding the square or boll. When the bracts cease to grow, this space widens as the boll matures and becomes penetrable by all sizes of insects. The measurements in table 6 indicate that a wide range of spaces exists for potential protective sites after fruiting begins.

No measurements of the various spaces associated with the vegetative buds of the plant were made, but the many folds of young, developing leaves and the compactness of the buds offer effective protective sites for many small insects. Before fruiting, the buds are virtually the only protective sites on the cotton plant.

Discussion—The discussion presented above concurs with the conclusion of van den Bosch and Hagen (*75*) that *Sinea* spp. are indiscriminate feeders. Nielson and Henderson (*56*) found that adult *Sinea* fed freely upon spotted alfalfa aphids, and Tuttle et al. (*74*) found that the adults also fed freely upon the cotton leafperforator and that the smaller instars will develop readily feeding on cotton aphids. Orphanides et

al. (*58*) found that the closely related *Sinea diadema* (F.) would feed on the eggs and first and final instars of the pink bollworm. The data presented in table 2 indicated that the fourth instar of *S. confusa* fed on fourth instar pink bollworms, but apparently as a last resort. The data would corroborate the conclusions of van den Bosch and Hagen (*75*) that the small numbers of adults found in the field (*6*) will severely limit their overall impact although the individual predators feed on large numbers of cotton pests.

Zelus renardii Kolenati

Prey accepted.—Lygus were fed upon by all stages of *Z. renardii* until the prey size exceeded the handling capacity of the nymphs (table 1). Relatively small numbers of cotton aphids were fed upon, although the larger instars of the *Z. renardii* had some success feeding on this relatively sessile prey. Only rarely did the *Z. renardii* nymphs and adults attack the eggs of bollworms and cabbage loopers; however, the larvae of these two species were readily fed upon until the size of the prey exceeded the handling capacity of the predator. No pink bollworm eggs were eaten by the *Z. renardii*. The fact that *Z. renardii* rarely fed on eggs of the three lepidopterous species but readily fed on the small hatching larvae suggests that *Z. renardii* nymphs and adults do not easily detect the eggs, but once the larvae emerge, the movement attracts the predator to the prey. Fourth and fifth instar cotton leafperforators were readily fed upon by the *Z. renardii* nymphs and adults, although the first instar *Z. renardii* apparently had some difficulty handling the perforator larvae. The aggressive nymphs of *Z. renardii* also readily fed upon the nymphs of *Geocoris punctipes*, a competing predator; however when the size of the prey exceeded the handling capacity of the *Zelus* nymph, predation declined.

Prey consumption.—The consumption of prey by the various stages of *Z. renardii* are presented in table 2. Generally, the consumption and resulting PV are in proportion to the size and species of prey consumed. As with *S. confusa*, the consumption of fourth instar pink bollworm larvae was erratic, and the *Z. renardii* nymphs seemed to feed only with reluctance. Likewise, bollworm eggs were rejected by the first instar nymphs of *Z. renardii*, and the nymphs could not be reared on the bollworm eggs. Feeding of bollworm and pink bollworm eggs was unsuccessful, and no first instar nymphs reached the second instar. The first instar nymphs ate from zero to two bollworms and zero to nine pink bollworm eggs and lived from 1 to 10 and 2 to 5 days, respectively. Feeding on the cotton aphids was also erratic and may be attributed to the broad size range of the cotton aphids and a configuration that renders the predator inept. Generally, the point value assignments resulted in acceptable totals within broad limits.

The first instar nymphs of *Z. renardii* showed a single preference in the paired tests (table 3). Cotton leafperforators in the fifth instar were preferred over the more aggressive second instar bollworms. The second instar nymphs preferred the first and second instar bollworms to the very aggressive third instar bollworms. Handling problems apparently existed with fourth instar cabbage loopers that were rejected in preference to the second instar cabbage loopers. The third instar nymphs demonstrated some capability for handling the aggressive third instar bollworms, but the second instar bollworms were still preferred. The third instar nymphs apparently could not handle the fourth instar loopers well and the second instar loopers were preferred. The fourth instar nymphs showed no marked preferences among the pairs of prey proffered. Likewise, the fifth instar nymphs and adults showed no marked preferences among the paired prey in the tests, but the adults may have had difficulty feeding on the smaller *Lygus* nymphs.

Searching capability and interception.—The *Zelus renardii* nymphs were generally successful against the relatively sessile cabbage loopers (table 4); however, the adults were somewhat erratic in their activities. The fourth and fifth instar nymphs seemed to be slightly more aggressive than the smaller nymphs and the adults. The *Z. renardii* nymphs and adults were not as effective against the more mobile lygus bug prey. As the size of the arenas increased, the capture rate decreased. The nymphs in the fourth and fifth instar were also more aggressive against the more mobile prey. Generally, the rates of capture were somewhat lower in the 20° C temperature regime, but capture rates in the higher temperatures were not significantly different.

Protective sites.—The data in table 5 indicate

that first instar nymphs of *Z. renardii* can pass through a hole of 3-mm or greater. The second nymphal instars readily pass through 4-mm holes, but the smaller individuals passed through 2-mm holes, possibly reflecting a greater aggressiveness by the second instar nymphs than by the first. Generally, the newly hatched nymphs of *Zelus* are relatively sessile and only start to disperse from the area around the central egg mass the second day after hatch. Therefore, nymphs of this age included in the tests explain the lack of passage through the smaller holes by the first instar nymphs. Nymphs in the third and fourth instars entered through 3-mm holes and fifth instar nymphs and adults passed through 5-mm holes. Thus, many of the protective sites on the cotton plants (table 6) are penetrable by the smaller *Z. renardii* nymphs, but probably not by the larger nymphs and adults.

Discussion.—van den Bosch and Hagen (*75*) indicated that *Zelus renardii* is a general feeder preying on both beneficial and plant feeding insects, but the lack of abundance prevents *Z. renardii* from being a major mortality factor. The data in table 2 and field population data (*6*) indicate the validity of this conclusion. Nielson and Henderson (*56*) found that *Z. renardii* adults fed freely upon alfalfa aphids. The data in table 2 indicate that individuals in the early instars will feed freely upon cotton aphids and develop properly on this prey. Tuttle et al. (*74*) found that *Z. renardii* adults fed freely on small cotton leafperforators. Orphanides et al. (*58*) found that the adult *Z. renardii* would feed on the egg and larval stages of the pink bollworm. These observations are corroborated by the data in table 2; however, the fourth instar *Z. renardii* did not readily feed on fourth instar pink bollworms. Although Ewing and Ivy (*12*) recorded that the young nymphs of *Z. renardii* fed on bollworm eggs, we were unable to rear first instar *Z. renardii* on bollworm eggs. Lingren et al. (*53*) indicated that adult *Z. renardii* would consume about 40 bollworm eggs per day and about 75 first instar bollworm larvae, but that the variability was great. Conversion of the 25 PV (table 2) by the 1.2 PV value for a first instar bollworm indicates that the values determined by Lingren et al. (*53*) and in the current study were similar. The data generally indicate that *Z. renardii* is a voracious predator that will attack any available prey.

Nabis alternatus Parshley

Prey accepted.—The advanced nymphs of *N. alternatus* fed on the young nymphs of *Lygus hesperus* (table 1). The early instars fed erratically on the smaller *Lygus;* but few older nymphs and adults of *Lygus* were accepted. The nabids fed on cotton aphids but fed sparingly on bollworm eggs. Smaller bollworm larvae were accepted, but older larvae were not eaten as well. The nabids fed erratically on cabbage looper eggs and larvae and generally took more of the smaller early instar larvae than the later instar larvae. The fourth and fifth instar nymphs fed on third instar cabbage looper larvae, but the adult nabids did not feed well on older larvae. Pink bollworm eggs were fed upon by the younger nabid nymphs, and pink bollworm eggs were used as prey in rearing younger nymphs. All stages of the nabids fed upon fourth and fifth instar cotton leafperforators. The acceptance of the various small prey indicated that the nabids would probably feed on any prey within their handling capability.

Prey consumption.—The consumption of several species and sizes of prey by *Nabis alternatus* is presented in table 2. The numbers of prey consumed are consistent with the sizes and species; however, variability is great due to the tendency of the *Nabis* to have short or long instars with the succeeding one shortened or lengthened to compensate for the prior difference. Again, fourth instar pink bollworm larvae were fed on erratically with some specimens of the predators apparently feeding only when extremely hungry. The PV's applied to the numbers of prey eaten result in reasonably consistent point totals for each stage but only when broad confidence limits appropriate to the variable length of the instars are accepted.

No distinct preferences were indicated by the first instar nymphs of *N. alternatus* but fourth instar *Lygus* nymphs were rejected apparently because the small *Nabis* nymphs were incapable of handling the larger prey. The second instar nymphs generally disregarded the lepidopterous eggs in favor of more mobile prey, and demonstrated an inability to handle large *Lygus* nymphs. Likewise, the third instar nymphs fed on relatively small numbers of lepidopterous eggs when paired with more acceptable prey. The third instar nymphs also proved incapable

of handling fifth instar *Lygus* nymphs. The fourth instar nymphs also fed on small numbers of lepidopteran eggs when paired with other more acceptable prey and also failed to handle the fifth instar of *Lygus* nymphs. The fifth instar nymphs rejected the pink bollworm eggs but readily fed on other species of prey when paired in the tests. The adults showed no marked preferences for the paired species and stages of prey used in the tests.

Searching capability and interception.—The nymphal and adult stages of *Nabis alternatus* were highly successful against the relatively immobile cabbage loopers, but the adult *N. alternatus* were somewhat erratic (table 4). The rate of capture in the 20° C regime was slightly lower than in higher temperatures where the rate of capture was similar. The *N. alternatus* nymphs and adults were also highly successful against the relatively mobile lygus bugs and only slightly less successful against them than against the immobile cabbage loopers; however, the rates of capture in the arenas with areas in excess of 3,000 cm^2 were slightly lower. Nymphs in the fourth and fifth instars were more aggressive than the smaller nymphs and the adults.

Protective sites.—The early nymphal instars of *N. alternatus*, and a limited number of fourth and fifth instar nymphs and adults, probably mostly males, were able to pass through the 2-mm holes (table 5). All sizes freely passed through 3-mm holes, including the fifth nymphal instars and the adults. Therefore, nabids could probably penetrate any site with a 3-mm diameter or greater, and the smaller nymphs could penetrate almost any protective site on the cotton plant (table 6).

Discussion—van den Bosch and Hagen (*75*) noted that nabids feed on a large variety of hosts including aphids, leafhoppers, lygus bugs, spider mites, and small caterpillars. Nielson and Henderson (*56*) and Taylor (*73*) indicated that *Nabis* feed freely on spotted alfalfa and pea aphid. The data in table 3 indicate that the young nabids will easily develop upon the cotton aphid. Note that the major source of the *N. alternatus* used in this study was a large winter infestation associated with the pea aphid and blue aphid in alfalfa growing in the vicinity of Tucson. Tuttle et al. (*74*) noted that nabids fed readily upon the larvae of the cotton leafperforator. These data are corroborated by the data presented in table 2. Lingren et al. (*53*) noted that *N. alternatus* adults fed readily, but erratically, upon bollworm eggs; however, the daily consumption rates of 22 eggs per day for the male and 37 eggs per day for females are considerably larger than the 15 per day determined in the current study.

Irwin et al. (*47*) found that *N. alternatus* and *N. americoferus* fed upon pink bollworm eggs. The data in table 3 indicate that young *Nabis* nymphs will feed readily and develop when fed only pink bollworm eggs. Taylor (*73*) found that *N. alternatus* fed readily on lygus bugs. Perkins and Watson (*62*) determined the average numbers of *Lygus hesperus* nymphs required to complete each stage of *N. alternatus*, and, within the broad variability, the numbers of nymphs consumed were similar to those in the current study.

Collops vittatus and *Hippodamia convergens*

Prey accepted.—The prey accepted by *C. vittatus* and *H. convergens* adults are noted in table 7. The *Collops* readily ate any prey that was small and relatively immobile; thus, cotton and pea aphid adults and small lepidopteran larvae and eggs were readily eaten. Mobile *Lygus hesperus* nymphs were eaten less often. The data suggests that *C. vittatus* adults are not aggressive predators and are unable to manipulate prey of larger size.

The *Hippodamia convergens* adults fed readily on cotton aphids and small bollworm and cabbage looper larvae as well as the bollworm, cabbage looper, and pink bollworm eggs. The *H. convergens* adults also fed readily on fourth and fifth instar cotton leafperforators, but fed erratically on *Lygus hesperus* nymphs of various sizes. The general acceptance seemed to be for small, relatively immobile prey.

Prey consumption.—Adult *H. convergens* fed readily on the small, inactive stages of several species of prey (table 8). Apparently, the predators encountered some difficulty in feeding on fifth instar cotton leafperforators, first and second instar *Lygus* nymphs, and second instar bollworm larvae. The apparent inability of the species to feed readily on these prey probably resulted in the shortened life of adults. The data suggests that *H. convergens* adults may have difficulty manipulating mobile or extra large

prey. This contention is further borne out in the prey preference tests (table 3), which indicated preferences for less mobile prey and smaller prey when *H. convergens* adults were paired with more mobile and larger prey. Limited acceptance of pink bollworm eggs in the preference tests may indicate a slight handling problem with the smaller sized eggs; however, the massive feeding on pink bollworm eggs in the consumption tests would indicate that pink bollworm eggs are probably freely fed on in the field.

The adult *C. vittatus* fed readily upon eggs and small larvae of the cabbage loopers and bollworms, but apparently had difficulty with the fourth instar cabbage loopers. *Collops* fed readily upon the cotton leafperforator larvae and upon cotton aphids and pink bollworm eggs. The beetles fed erratically or only slightly upon the small *Lygus* nymphs (table 8).

H. convergens adults showed no marked preference when offered choices between eggs and small larvae of bollworm, cabbage looper, cotton leafperforator, and pink bollworm. Throughout the choice tests, the less mobile forms of these lepidopterans were preferred over the more mobile lygus bugs. Similar results were obtained with the *C. vittatus* adults. Thus, the two Coleopteran predators would appear to be best adapted for feeding on small immobile stages of insects.

Searching capability.—The data on interception and capture by *C. vittatus* and *H. convergens* are presented in table 9. The interceptions and captures by *C. vittatus* generally confirm the results presented in table 7, that is, the mobile prey were captured only in the smaller arenas and then in small numbers. The data also confirm the lack of aggressiveness of *C. vittatus* adults; however, the data presented for the mobile prey at 25° C and L-D 14:10 indicate that under certain, undefined physiological conditions beetles may become more aggressive. Improved performance in the large arenas may also indicate that the increased area for maneuvering allowed for more normal behavior than did the smaller arenas where the close confines resulted in continuous mutual agitation. The more sessile cabbage loopers were readily eaten, and the *C. vittatus* adults appeared to be highly mobile in all temperatures 25° and above.

In a test at 20° C the *C. vittatus* adults fed irregularly, and the feeding declined when the beetles were introduced into arenas of 5,000 cm^2 or more. The erratic feeding probably indicates that the test predators were of varying age and physiological state. The predators in this test were field-collected, and the results should reflect the feeding habits of adult *C. vittatus* field populations within the limitations of projecting laboratory data into field situations.

H. convergens adults had considerably better success with the mobile prey than did the *C. vittatus* adults; however, the rates of capture were relatively low and somewhat erratic, and the overall capture under all temperature and light conditions and arena areas was only about 20 percent. The *H. convergens* adults readily captured the more immobile cabbage looper larvae, and the general capture rate over the entire array of temperature, light regimens, and arena areas was about 80 percent. As in the case of the *C. vittatus* adults, the variable physiological background of the field-collected ladybird adults may account for much of the inconsistency in the data.

Protective sites.—*Collops vittatus* readily passed through holes of 3-mm in diameter and larger and *H. convergens* adults readily passed through holes of 4-mm in diameter and larger (table 5). Thus, both the *Collops* and *Hippodamia* adults may penetrate into most sites on a cotton plant, including the terminal buds, with the possible exception of the tightly folded leaves in the center of the buds. Only the small square bracts that are tightly pressed to small squares would obstruct their passage.

Discussion—van den Bosch and Hagen (*75*) noted that during the midportion of the cotton growing season, *H. convergens* adults are almost the only stage of the ladybirds found in the cotton. The Arizona situation is similar, and, although van den Bosch and Hagen (*75*) indicated that the summer generation of the ladybird beetles feed principally on plant exudations and pollen, the data in table 8 would indicate that any lepidopteran egg would be placed in jeopardy by the presence of a population of *H. convergens*. During the major portion of the cotton season, as noted by van den Bosch and Hagen (*75*), larval populations are virtually absent from the fields and only the adults must be considered. The ready feeding on aphids has been noted by Nielson and Henderson (*56*) who found

that the *H. convergens* ate about 100 spotted alfalfa aphids per day as compared with 45 cotton aphids per day determined in this study. Lingren et al. (*53*) found that *H. convergens* males fed on 52 bollworm eggs, and females, 130 eggs per day. Males fed on 107 first instar bollworm larvae, and females, 137. These data compare favorably with the 82 bollworm eggs per day consumed by the adults in the current study, but larval feeding was far greater (table 8). Orphanides et al. (*58*) found that *H. convergens* adults fed on eggs and first instar pink bollworms, and the current study corroborates these data. Generally, it appears that *H. convergens* adults, although seemingly dilatory in their predatory activities during the midseason, actually may devour large numbers of lepidopterous pest eggs.

The data on the feeding of the *C. vittatus* confirm the observations of Walker (*76*), Nielson and Henderson (*56*), and van den Bosch and Hagen (*75*) that adult *Collops* readily feed on soft-bodied insects. The lack of preferences among the immobile, soft-bodied prey reduces hungry *C. vittatus* adults to feeding on any manageable prey intercepted. The lack of success against the more mobile *Lygus* would indicate that the *Collops* adults would not be an effective predator against this complex.

Predator development and longevity—The developmental periods for *Sinea confusa*, *Zelus renardii*, and *Nabis alternatus* are presented in table 10, and the regressions derived from the data are presented in table 11. *S. confusa* did not develop well at 15° or 33° C but did very well in the middle range of temperatures. The poor development and survival at the high and low temperatures may explain the relatively small populations of the species during extremely hot and cold periods of the year. Relatively large populations exist during the moderate seasons, particularly in late August and September when a larger biomass of prey also exists in Arizona cotton. Likewise, *Z. renardii* did not rear well at the 15° or 33° temperatures, but small numbers survived to adulthood and died in the final molt. Although *Z. renardii* did slightly better than *S. confusa* at the cooler temperatures, they were not as successful as *S. confusa* at the higher temperatures. *N. alternatus* developed and survived best in the middle range of temperatures, and, although development was successful at the higher temperatures, longevity and survival were seriously curtailed. The success in the lower middle range of temperatures will explain the abundance of the predator in alfalfa feeding on a pea and blue aphids during late winter and spring of 1976 in southern Arizona. The population in the alfalfa served as a major source of insects in the experimentation.

The duration of the stages of the three hemipterous predators fed several different prey is presented in table 12. The first nymphal instar of *S. confusa* was generally consistent except when the nymphs were fed upon the eggs of the cabbage looper and cotton aphids. The duration of the second nymphal instar was relatively constant throughout the feeding tests. The third instar nymphs fed upon cotton aphids had an extended time in that instar, and the fourth instar nymphs fed on pink bollworm larvae also required more time to pass through the instar. The fifth instar nymphs required a longer developmental time when fed *Lygus* adults. The longevity of the adults was generally extended by feeding larger cabbage looper and bollworm larvae, but the maximum was attained by two individuals fed fifth instar cotton leafperforators (table 12). The data suggest that future research will be required to evaluate the effects of nutrition, resulting from feeding different prey, upon the development and longevity of *S. confusa*.

The developmental time of the first instar nymphs of *Zelus renardii* was extended when the nymphs were fed cabbage looper eggs, first and second instar larvae of bollworm larvae, and cotton aphids. The second and third nymphal instars were extended when fed the cotton aphid, and the fourth nymphal instar was extended when the nymphs were fed fourth instar bollworms. None of the prey fed extended the fifth nymphal instar, but the adult longevity was apparently shortened by the feeding of the cotton leafperforator and larger *Lygus* nymphs and adults.

The nymphal instars of *N. alternatus* were not greatly affected by the nutritional qualities of the various prey; however, the adult longevity was curtailed when the adults fed on fourth instar pink bollworms and large-sized *Lygus*. The data suggest that the nutritional qualities of aphids should be investigated because many of

the predators depend upon this group for a major portion of their food supply. The extended instars for the nymphs fed fourth instar pink bollworm larvae may be explained through the reluctance of the nymphs to feed on the pink bollworm larvae (table 3) with some probable starvation resulting. The fecundity of the adult females fed the various prey should be investigated.

Discussion—The duration of the egg stage of *Sinea confusa* presented in table 10 is similar to that noted by Butler (*7*); however, the nymphal period at 20° and 30° C presented by him are somewhat longer than the periods noted in table 10. The developmental rate at 25° was similar in both studies.

The duration of the egg stage of *Z. renardii* presented in table 10 is similar to the periods noted by Butler (*7*). The nymphal period of 62 days noted by Butler for *Z. renardii* at 20° C is somewhat longer than the 52 days determined in the current study; however, the developmental rate at 25° was similar. The developmental rate of the single individual that lived to adulthood when reared at 30° was similar to the timespan of the nymphal period noted by Butler (*7*). His apparently successful rearing of nymphs at 30° may possibly be attributed to the different quality of the coddled prey he used compared with the live prey used in the current test.

The developmental rate of *Nabis alternatus* presented in table 10 is similar to the developmental rate determined by Perkins and Watson (*61, 62*). The developmental periods presented by Taylor (*73*) also appear to be similar although the temperatures and conditions under which the nabids were reared were not indicated.

The longevity of *H. convergens* fed cotton aphids appears to be twice as long as the longevity of *H. convergens* fed spotted alfalfa aphids by Nielson and Currie (*55*). The considerable variability of the longevity of the *H. convergens* would indicate that the effects of nutrition on the longevity of the adults should be studied in further detail. The shortened lifespan of the adult *H. convergens* fed mobile prey, as compared with the longevity of the adults fed lepidopterous eggs and aphids, indicates a lack of aggressiveness or poor utilization of certain prey species.

The longevity of *Collops vittatus* adults was apparently increased by feeding eggs of cabbage loopers, bollworms, and pink bollworms. A slightly extended longevity was prevalent among the individuals fed bollworm larvae. The erratic interrelationship of *Collops* with *Lygus* nymphs was also evident in the shortened longevity of the individuals fed small *Lygus* nymphs.

General discussion.—The feeding and searching studies discussed above provide a basis for the elucidation of a multiple species, predator-prey relationship in an overall ecosystem. The data provide basic information on a limited number of species, but leave open the further elaboration of feeding on additional prey by predators. Throughout the study, intrapredator predation seemed to be a sizable factor in the mortality of various species of predators. Further elaboration of intrapredator feeding will be necessary before the implications of this predation can be evaluated. Tamaki et al. (*71*) have provided the concept of predator power against a single prey. The PV system developed in the current study provides for the spread of predator power over a multispecific prey spectrum. A combination of the two schemes should provide a basis for the evaluation of the impact of predators in the multispecific ecosystem.

Peromyscus spp.

The daily consumption of grain and insect pupae by *Peromyscus maniculatus* and *P. merriami* is presented in table 13. The consumption of each of the five individual *P. maniculatus* was markedly similar, although one unusually small specimen (mouse 3) consistently consumed slightly less than the four larger specimens. The consumption of each type of food was also markedly similar when the insect pupae were reduced to the dry weights presented in table 13. The dry weights represent 27 and 28 percent, respectively, of the wet weights of *Heliothis* and beet armyworm pupae. Four of the five specimens showed a preference for sorghum over mesquite beans, and all of the specimens preferred the insect pupae to the sorghum. The Mann Whitney U Test was used for the statistical comparison.

The single specimen of *P. merriami* was likewise consistent in its daily consumption of the individual foods, and its mean daily

consumption was only slightly less than that of the *P. maniculatus*. *P. merriami* frequents mesquite bosques and showed a significant preference for mesquite beans and insect pupae over sorghum. In virtually every daily replicate of the insect pupae-sorghum choices, the feeding on pupae predominated, but some sorghum was usually eaten. The data generally indicate that either the seed or the animal food is adequate for the mice, but with copious amounts of both seeds and insect pupae available the mice will usually choose insect pupae as their major food.

When the insect pupae were offered to the mice in their natural positions in the soil, the *P. maniculatus* readily detected and fed upon the *Heliothis*, beet armyworm, and pink bollworm pupae (table 14). The *P. merriami* specimen, however, was reluctant to dig the *Heliothis* pupae from the soil but readily detected and fed upon the beet armyworm that occur near the soil surface and pink bollworm pupae at the soil-trash interface.

When offered sorghum in competition with the naturally pupated insects, the *P. maniculatus* removed a mean number of 13 *Heliothis* pupae per day and one gram of sorghum. Conversion of the grain consumption to pupal equivalents indicated that 15 additional pupae might have been fed upon had the grain not been so freely available. The single specimen of *P. merriami* ignored the *Heliothis* pupae entirely and fed only upon the grain. The *P. maniculatus* removed about 60 percent of the pink bollworm pupae (which is equal to approximately 0.4 g wet weight) and finished their daily feeding with the sorghum. The *P. merriami*, fed upon the readily available grain rather than dig for the pink bollworm pupae. Thus, the *P. maniculatus* readily fed upon the naturally pupated insects, but their marked preference in the open feeding tests presented in table 12 was compromised by the presence of the readily available sorghum. *Peromyscus merriami* obviously preferred not to dig for insect pupae when other foods were easily available, but readily devoured the insect pupae when they were offered openly.

When *Heliothis* pupae were buried to simulate cultivation, both species failed to detect and devour the pupae in the numbers that naturally pupated insects were fed upon (table 14). *Peromyscus merriami*, forced to dig for food, removed very few pupae, whereas consumption by *P. maniculatus* was reduced nearly one half.

Other studies of the food habits of *P. maniculatus* indicate that the availability of food determines the diet consumed. Jameson (*48*), studying in the northern Sierra Nevada, found that arthropods comprised 26 to 36 percent of the diet of *P. maniculatus* in the brush fields and the coniferous forests. The diet of *P. maniculatus* also included 40 to 57 percent seeds and fruits. Williams (*82*) found that the amount of arthropods in the *P. maniculatus* diets ranged from 8 to 28 percent in grassland and forest study areas in Wyoming and Colorado. In the same study, seeds comprised from 33 to 79 percent of the total food consumed, with conifer seed the predominating seed. Whitaker (*81*) found the lepidopteran larvae were the most important food of *P. maniculatus bairdi*, forming about 50 percent of the diet, whereas about the same amount of the food was seed. In crop fields, nearly one-third of the food consisted of seeds of the cultivated crop. In the same study, grass seeds made up 42 percent; cultivated crop seeds, 23 percent; and lepidopteran larvae, 15 percent of the total amount of food consumed by *Mus musculus*. Thus, there is indication that availability is the prime factor in determining the proportions of insects and seed in the diet of these two species of mice.

University of Arizona students,[1] studying trap efficacy and biomass of *P. maniculatus* and *M. musculus* in Marana, Ariz., captured 4, 64, and 12 *P. maniculatus* during a 3-day period in mature cotton, soybean, and sorghum, respectively. Trap grids 160 by 60 m with 64 traps also yielded one, zero, and 47 *M. musculus*, respectively, during the same period. Sixteen traps placed in alfalfa also captured both species. The data indicate that field mice are commonplace in crops in which *Heliothis* is a common pest. Fye (*25*) indicated that a major overwintering population of *Heliothis* in southern Arizona may be found in sorghum; thus, the results of the early November study demonstrated that the field mice may be a potentially effective mortality factor in late season in Arizona. Although no *M. musculus* were captured for the feeding studies, their presence indicates the necessity for determining

[1]Kenneth Sinay and Paul Toberg III.

their potential as a late-season mortality factor. The data suggest that *P. maniculatus* may be a considerable mortality factor of insect pupae in southern Arizona field crops.

THE MODEL

Introduction

Once the impact of predator species on pests is estimated it must be integrated into the total mortality. The following conceptual model (fig. 3) constitutes a preliminary attempt to consider the role of predators in the interrelations of insect populations in cotton in southern Arizona.

The flow chart (fig. 3) shows that a cohort of eggs, larvae, pupae, or adults for a chronological day is comprised of individuals from several daily cohorts from prior days. This is due to a differential in the developmental rates based on physiological time (fig. 4 and table 15). That is, all the eggs laid on a given day by the adult insects generally will not hatch on the same day, and the hatch may be spread over several days. Likewise all the larvae, or nymphs from a given daily larval cohort will not move into the next instar on the same day; therefore, the daily cohort of a given stage is formed with individuals from several of the prior daily cohorts.

For determination of the number of individuals forming a cohort of the next stage, the daily losses by the prior cohort to the various mortality factors must be considered. Likewise, the numbers of a cohort must be reduced by the numbers passing into the next stage.

When the adult cohorts are finally formed and the losses during the preovipositional period are taken into consideration, the numbers of remaining females, the daily fecundity (*37*), and the daily mortality must be used to determine the

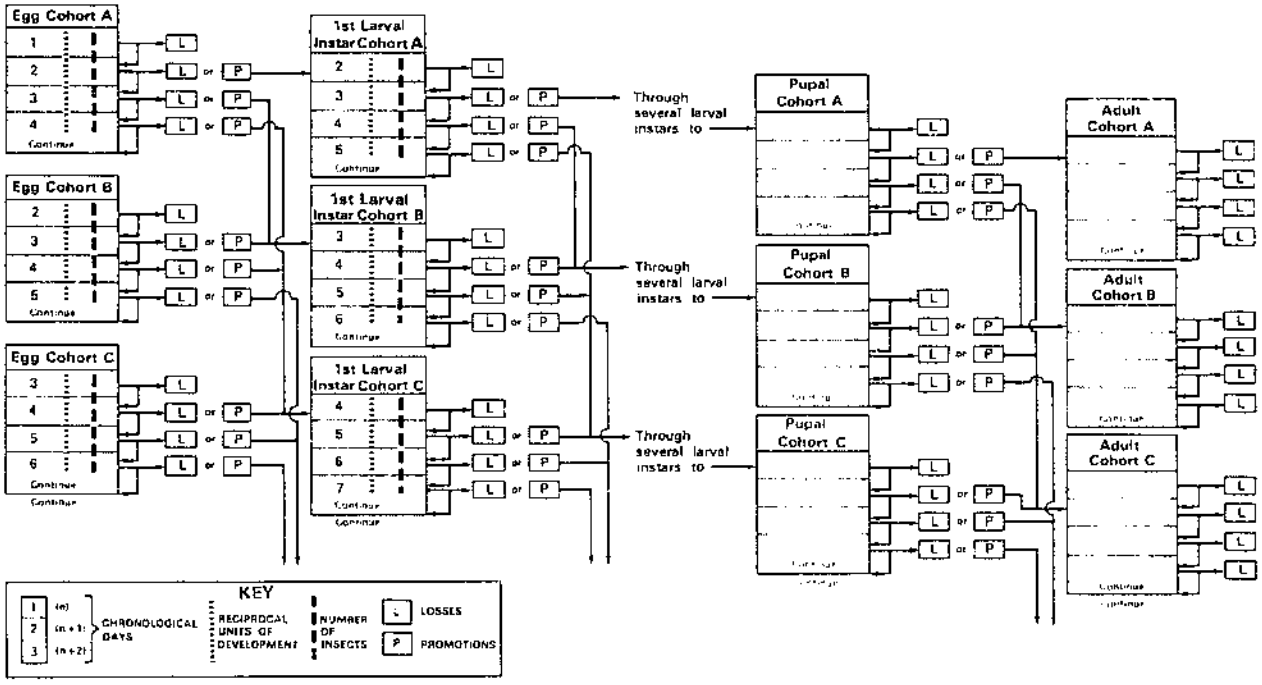

FIGURE 3.—Basic flow chart for considering the accumulation of physiological time, age stratification, losses, and survivors at daily intervals. In the key, the chronological day (*a*) refers to a convenient representative time period; the accumulated physiological time (*b*) refers to any acceptable system for accumulating physiological time; losses (*c*) refer to losses to all mortality factors during the chronological day; and promotions (*d*) refer to numbers changing to the succeeding stage during the chronological day.

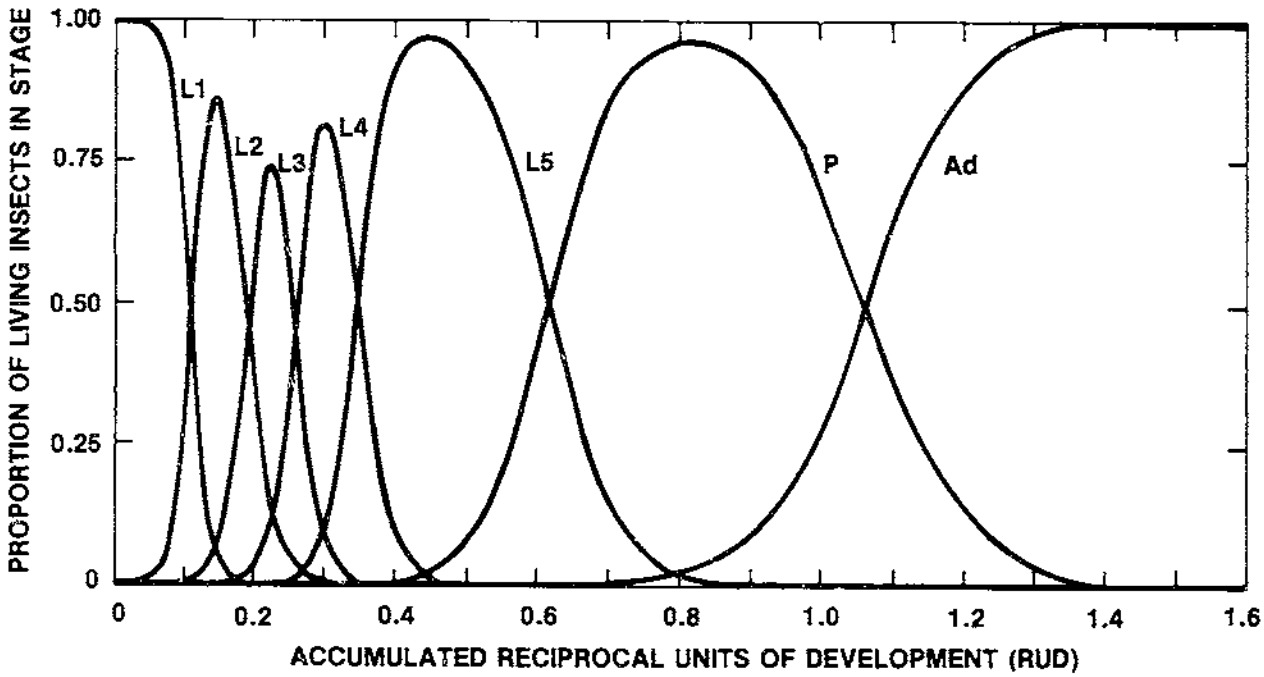

FIGURE 4.—Fitted curves for age stratification of bollworms (table 15). L1, L2, L3, and L5 designate larval instars, P indicates pupae, and A, accumulated numbers of adults.

daily number of eggs in the egg cohorts of the subsequent generation.

The model will incorporate major data on a number of both the pest and predator species, and any pertinent available information from literature sources will be noted in developing the model.

The model (fig. 3) is rudimentary but incorporates attributes essential to the analysis of insect populations in cotton in southern Arizona. Large amounts of data are necessary for the development of adequate models. Much of the data presented in this section and, previously, for the boll weevil (*29*) must be considered as preliminary to an ever-improving body of data directed toward refined simulation of the dynamics of insect populations in the cotton ecosystem.

The simulation utilizes physiological units based on temperature input as a base (*37, 38*), and, therefore, is limited to analysis of situations in retrospect. Short-term projection of populations could be attained by use of "normal" future temperatures, but a progressive updating based on occurring temperatures would be necessary to maintain continuing validity of projections based on the current population. For the purpose of discussion, we will assume a daily evaluation of the populations with the submodels, but other time periods may prove more feasible in the future.

The Insects

The pink bollworm is the major pest of cotton in Arizona. Two major secondary pests are bollworms and lygus bugs. Cotton leafperforators may be a major pest in localized areas. Cabbage loopers may occur in large numbers, but are rarely considered pests because the population buildups occur late in the season when the defoliation they cause is beneficial rather than destructive. Beet armyworms and saltmarsh caterpillars may become pests in local areas, but ordinarily are of minor consequence.

The major naturally occurring predators found in cotton in southern Arizona include *Nabis alternatus* Parshley, *N. americoferus* Carayon, *Geocoris punctipes* (Say), *G. pallens* Stål, *Orius tristicolor* (White), *Zelus renardii* Kolenati, *Sinea confusa* Caudell, (*80*) *Chrysopa carnea* Stephens, *Collops vittatus* (Say), and *Hippodamia conver-*

gens Guérin-Méneville. The hemipteran predators and larval *Chrysopa carnea* are predators in all mobile stages. Although the coleopterous species are generally found only in the adult stage in cotton, an occasional larva of *H. convergens* may be detected. Spiders are common predators in southern Arizona cotton (*6*), but have not been investigated intensively.

The Developmental Submodel

The basic driving force of the developmental submodel is heat input as indicated by temperature. The ambient air temperature is commonly modified by the plant canopy, resulting in temperatures that the insects associated with cotton actually experience. The soil-inhabiting stages are subjected to temperatures with multivariate origin.

Modification of Air Temperature by Cotton Plants

The regression data for the estimation of the modification of air temperature by the cotton plant are presented in table 16. The basic linear regression equation:

$$y = a + bx \quad (1)$$

where:

y = the estimated temperature in the particular plant part

a = intercept of the y axis

b = the slope of the regression line

x = the air temperature

is applicable.

The estimation of temperatures on the soil surface and in the soil is more complex, but can be accomplished if measurements of air temperature, soil moisture, other soil physical factors, windspeed, cloud cover, and plant cover (*31*) are available (*13*).

Reciprocal Units of Development

The estimated temperatures for the various plant parts may then be transformed into reciprocal units of development (RUD) (*37, 38*), utilizing the linear regression equation:

$$y = a + bx \quad (2)$$

where:

y = the estimated RUD

a = intercept on the y axis

b = the slope of the regression line

x = the appropriate plant part or soil surface temperature

To estimate the RUD, the location of the insect stage to be considered should be determined and the appropriate plant part temperature selected. For the species under consideration here, the locations are presented in table 17, and the regression data for the RUD estimation in table 11.

The use of regression techniques raises the question of confidence limits. To date, statisticians have not developed a fully satisfactory method for calculating a final confidence limit when a succession of regressions is employed. Review of the publications cited in tables 11 and 16 indicate that the individual regressions yield a highly satisfactory coefficient of determination; therefore, as long as the coefficients of determination remain relatively high, the final estimate—using a succession of regression equations—will probably be satisfactory. However, if a regression with a relatively low coefficient of determination is in the series, the final result should be interpreted very conservatively.

Nutritional Adjustment of RUD

The RUD for the lepidoptera listed in table 11 were developed using the diet described by Patana (*59*). Variations in the length of the developmental period would be expected among insects reared under relatively ideal conditions in the laboratory and those feeding on plants in the field under more stressful conditions. Further variation would be expected because of the aging of the field plants, resulting in a change of nutritional value to the insects.

The data presented in table 18 indicate that

the progeny of the captured wild moths of bollworm, tobacco budworm, and beet armyworm developed upon the laboratory diet (*59*) in about the same physiological time as those in the test of Fye and McAda (*37*). Only the cabbage loopers had an appreciably longer developmental period. Considerable differences have been noted in other wild stock introduced into looper cultures for the first time. The developmental times of crowded cabbage loopers from the same egg cohort may be appreciably different. The cultures are frequently infected with microbial diseases that also alter the developmental times; therefore, the extended developmental times could be expected, but at the same time, demonstrate the difficulties encountered in estimating the age stratification of an insect population. Developmental times were considerably greater when bollworm larvae were fed cotton bolls and squares or were placed on plants in the greenhouse and field. Tobacco budworms developed as rapidly on bolls and squares in the laboratory as they did on the laboratory diet, but when placed in the greenhouse and field, the developmental times were extended. Beet armyworms fed on cotton squares, bolls, and leaves had extended developmental times and when placed under the additional stresses in the greenhouse and field the developmental times increased appreciably.

The discrepancies in the developmental times of the cabbage looper were noted above; however, within the laboratory greenhouse and field experimentation cabbage loopers demonstrated a similar developmental time. Saltmarsh caterpillars placed in the greenhouse required an appreciably longer developmental time than those described by Fye and McAda (*37*), indicating that greenhouse grown leaves may have a considerably different nutritional value than the laboratory diet. When the saltmarsh caterpillars were placed in the field, their survival rate was extremely low and developmental times were extended. All available data indicate that high temperatures are detrimental to saltmarsh caterpillars. During the field experiments, high temperatures, that is, in excess of 35° C, occurred over extended periods, and the longer developmental period may be attributed to their detrimental effects. The data clearly indicate that it is (1) desirable to use wild stocks in physiological-ecological studies, (2) necessary to employ natural foods, and (3) essential to determine experimentally the pertinent interactions of factors affecting development.

Age Stratification

The physiological time scheme (RUD) presented above in dynamic form provides the essential elements for stratifying the ages of insects in each pest and predator population under consideration.

The progression of larvae (nymphs) of a given daily cohort through the various stages is a series of logistic curves (fig. 4). The curves presented in figure 4 and for the other species considered (table 15) were fit with the logistic equation (*42*) employing the computer program LEAST with weighting factors incorporated in the program:

$$y_x = \frac{1}{1+e^{-(a_x+b_x t)}} - \frac{1}{1+e^{-(a_{x+1}+b_{x+1} t)}} \qquad (3)$$

where:

y_x = estimate of the proportion of the insects in the instar

x = the instar under consideration

$x+1$ = the next instar

e = the base of natural logarithms = 2.71828...

a and b = parameters calculated from data (table 15)

t = the accumulated RUD since initiation

The movement from the first to second larval instar and entrance into adulthood are special cases because they initiate and terminate the cycle and may be estimated with the equations:

First instar larvae:

$$y = 1 - \frac{1}{1+e^{-(a+b t)}} \qquad (3a)$$

Adults:

$$y = \frac{1}{1+e^{-(a+b t)}} \qquad (3b)$$

With the estimates of the proportion and numbers of insects in each stage, we are prepared to make the estimates required in equations 3 and 7.

Assuming that the stratification curves (fig. 4) approximate a normal distribution curve, it may be feasible to utilize published developmental data (*8, 10*) that provide mean developmental times with standard deviations to develop stratification information for additional species. For example, Butler and Ritchie (*8*) provided data on *Chrysopa carnea* Stephens. The normal distribution curve is:

where:

$$fZ = \frac{1}{\sqrt{2\pi}} e^{-\frac{Z^2}{2}} \qquad (4a)$$

entering the substitution

$$X = {}^{o}{}_{x}Z + \mu_x \qquad (4b)$$

where:

X = accumulated RUD

μ_x = mean of X

${}^{o}{}_{x}$ = standard deviation of X

then

$$Z = \frac{X - \mu_x}{{}^{o}{}_{x}} \qquad (4c)$$

and the corresponding function becomes

$$f(X) = \frac{1}{\sqrt{2\pi}} e^{\frac{(X-\mu_x)^2}{2\sigma^2}} \qquad (4d)$$

Chrysopa carnea curves derived from the data of Butler and Ritchie (*8*) are presented in figure 5.

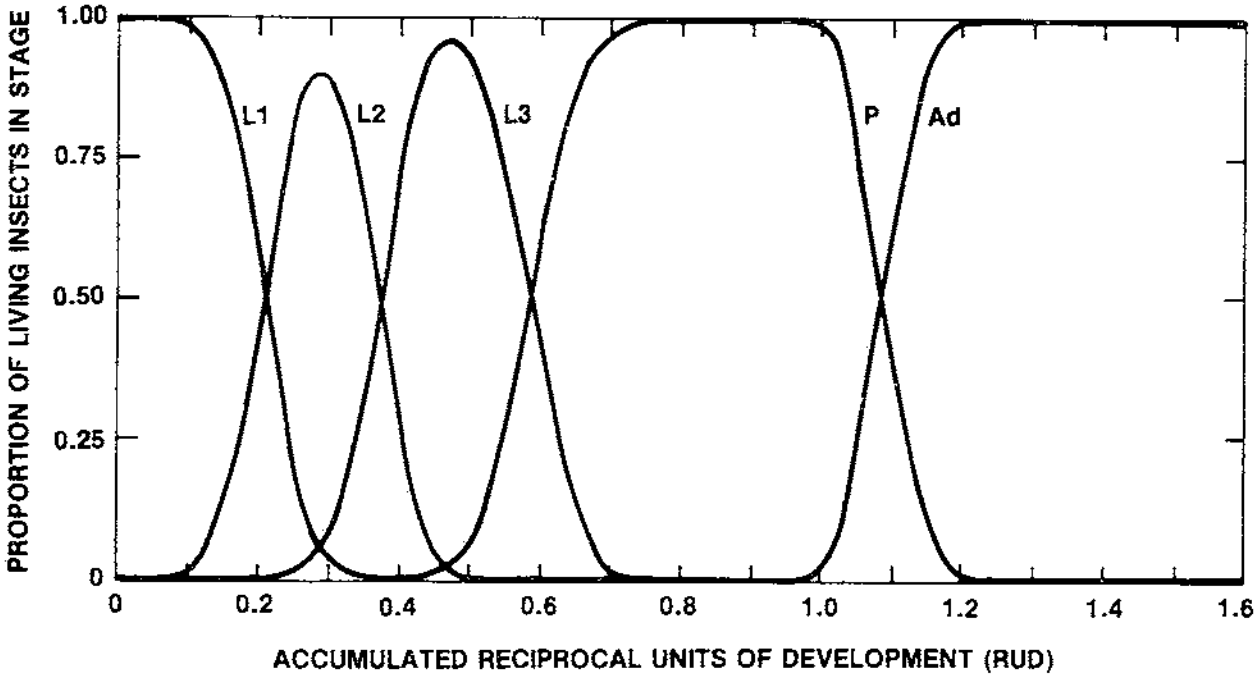

FIGURE 5.—Fitted curves for age stratification of *Chrysopa carnea:* L1, L2, and L3 designate the larval instars, P indicates pupae, and Ad the accumulated number of adults. Derived from Butler and Ritchie (*8*).

THE NATALITY-MORTALITY SUBMODEL

Initial Conditions

Assume one (or more) of the following:

1. The populations of pests and predators can be assessed and the age stratification established.
2. If the population of ovipositing females is from an overwintering situation, a model is available to provide an estimate of the number of emerging females into the population.
3. Oviposition sites become available at a specific time, and the numbers of females in the population are known and initiate oviposition at that time.

Population Assessments

To initiate the simulation, the populations to be considered must be accurately assessed with the ages of the individuals stratified.

The pertinent references to population assessments for the simulation to be described are listed in table 19. The distributions of the insects in the field result in mean population estimates that are heavily encumbered with variance, and confidence limits are necessarily broad. For the purposes of this discussion, the validity of a mean estimate will be assumed, but with the reservation that a poor estimate by the simulation may fall in the broad confidence limit of the population assessment.

Diapause

Confidence in current simulations directed toward the study of emergence of populations from winter diapause must be limited. Tauber and Tauber (*72*) have noted that the interactions resulting in the emergence have been poorly delineated and that the complexity of the interactions may hamper their elaboration. Fye and Carranza (*32*) have investigated three lepidopterous species under consideration and suggest that the intensity of diapause in *Heliothis zea* and *H. virescens* may vary in intensity but found no diapause in *Spodoptera exigua*. Considerable literature exists on the idiosyncrasies of pink bollworm diapause (table 19), but a lack of information on the triggers of diapause termination invalidates the use of the data for simulation purposes.

Leigh (*52*) reported peak reproductive diapause in *Lygus hesperus* at Shafter, Calif., during mid-October, and Beards and Strong (*2*) and Strong et al. (*69*) found nearly complete diapause in *L. hesperus* in the Davis, Calif., area at the same time. Generally, the main diapause started early to mid-September in the California populations and was nearly terminated by early January. In the Tucson area, *L. hesperus* reproductive activity declined rapidly during October and was minimal in the last week of October. The reproduction activity returned to a nearly normal level by mid-December.[5]

Apparently, little is known about the overwintering of the predators under consideration, although observations of *Z. renardii*, *S. confusa*, and *N. alternatus* made during the studies described above and the studies of Stoner et al. (*68*), indicate that all the females do not diapause, and development is very slow (table 10) in the nondiapausing individuals under winter conditions in southern Arizona. Apparently, the diapause resembles that of lygus bugs in which the diapause is not a discrete phenomenon and, therefore, will be difficult to simulate. Until the interactions of the various factors associated with the triggering of entrance into and termination of diapause, particularly bioclimate (*3, 26*), are properly elaborated, modeling of diapause will remain an unsatisfactory approach to simulation initiation.

Oviposition Site Availability

If oviposition site availability is to be modeled and the site occurs on a plant, a growth model of the plant is desirable. Plant growth models are available for cotton (*54, 66*), and as these are improved the interrelations between the plants and insects will be interwoven using simulation techniques. When this is accomplished, the first availability of oviposition sites may be coupled with a population estimate of ovipositing females and the simulation initiated. Thus, current simulation initiation is dependent upon population assess-

[5] G. D. Butler, Jr., First Quarterly Report of 1969. U.S. Dept. Agr., Science and Education Administration, Western Cotton Insects Investigation, Tucson, Ariz., pp. 5-7.

ment although population estimates are encumbered with broad confidence limits.

Oviposition and Egg Loss

To initiate the model, the egg population for each species under consideration is:

$$E_n = E_{rn}+E_{on}-E_{hn}-E_{\ell n} \quad (5)$$

where:

E_n = total number of eggs on day n (day of initiation)

E_{rn} = residual of unhatched eggs from previous days

E_{on} = number of eggs laid on day n

E_{hn} = number of eggs hatched on day n

$E_{\ell n}$ = number of eggs lost to other causes on day n

The defined terms may be further elaborated:

$$E_{rn} = \Sigma[E_o - E_h - E_\ell]_{n \ldots n-x} \quad (6)$$

where:

E_{rn} = residual of unhatched eggs from previous days

n = day of the simulation initiation

x = the earliest prior day on which an unhatched egg was laid (based on egg RUD accumulation)

E_o = number of eggs laid on a given day

E_h = number of eggs hatched on that day

E_ℓ = number of eggs lost to other causes on that day

If the history of the egg population and the associated heat accumulation are known, the data in table 21 may be applied in retrospect. Otherwise, the initiation is difficult and should be attempted with a nearly zero egg population. This point would commonly occur at the start of the season (assumption 3 "Initial Conditions," p. 21), or during an ovipositional lapse between distinguishable generations, preferably when no adults were present.

$$E_{on} = \Sigma[MxF]_{A \ldots A+Y} \quad (7)$$

where:

E_{on} = the number of eggs laid on a given day

M = number of females of a given age

F = daily fecundity of moths of that age in RUD (table 20)

A = the age in RUD of moths ovipositing for the first time

$A+Y$ = the age in RUD of the oldest ovipositing moths

The evaluation of populations of adults, particularly lepidopterous species, is extremely difficult, but, hopefully, the use of developmental simulations as described above will enable entomologists to make estimates of the numbers entering the population and their respective ages. The estimate will necessarily include background information on the sex ratios of each species. Again, the best time to initiate the model is when no or few ovipositing moths are available and the larval (nymphal) age stratification can be assessed and the model can be entered in equation 3 and continued.

If the number of females in each age group is known (M, equation 7), or determined by simulation, the daily fecundity for each physiological age group may be estimated with equation 3b. The parameters are presented in table 20.

Egg Hatch

The total egg hatch may be estimated

$$E_{hn} = \Sigma E_{ho_{n-1 \ldots n-x}} \quad (8)$$

where:

E_{hn} = number of eggs hatched on day n

E_{ho} = number of eggs hatched from each day of oviposition

n-1 = the day before n

n-x = the earliest prior oviposition day with an unhatched egg

The egg hatch from each daily egg cohort may

be estimated, utilizing accumulating RUD calculated from the regression coefficients presented in table 11 and equation 3b.

The coefficients are presented in table 21, and graphic presentation of the curve for bollworms is presented in figure 6. Summation (equation 8) of the newly hatched larvae estimated from equation 3b provides the daily cohorts to enter equation 13.

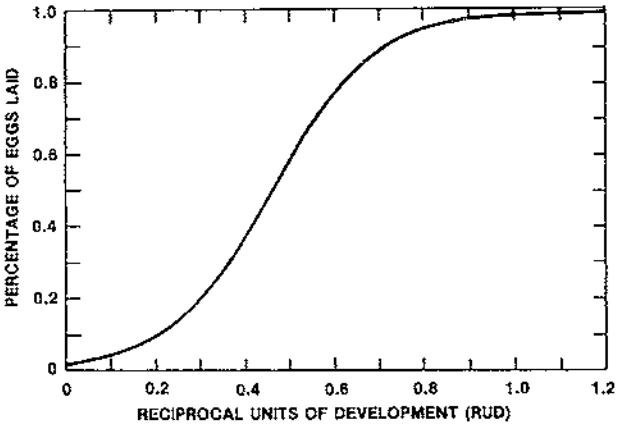

FIGURE 6.—The accumulated egg hatch of bollworm eggs in relation to the accumulated egg reciprocal units of development (RUD). Derived from Fye and McAda (*37*).

Egg Losses

During the egg stage, numerous debilitating and catastrophic factors that result in the loss of eggs must be considered quantitatively:

$$E_{\ell n} = E_{\ell c} + E_{\ell pa} + E_{\ell pr} \qquad (9)$$

where:

$E_{\ell n}$ = total number of eggs lost on day n to causes other than hatching

$E_{\ell c}$ = number of eggs lost to bioclimatic factors

$E_{\ell pa}$ = number of eggs lost to parasitism

$E_{\ell pr}$ = number of eggs lost to predation

Egg Losses Due to Bioclimate

Fye and Poole (*39*) demonstrated that during the larval-pupal developmental period and during adulthood, sustained high temperatures would effectively reduce the fecundity and fertility in six of the lepidopterous species (table 22) found in Arizona cotton. The effective fecundity, that is, the final percentages of hatching eggs after the larvae, pupae, and adults had been exposed to several periods of extreme temperatures, is presented in table 22. Daily periods of 2, 4, and 8 h at 35° C did not have any detrimental effect on bollworms, tobacco budworms, beet armyworms, cabbage loopers, and saltmarsh caterpillars; however, pink bollworm hatch was reduced to about half when the adults were exposed daily to 8 h at 35°. The fecundity of all species was effectively reduced by 16-h periods at 35°. Two-hour exposures at 40°, during the larval-pupal stages of tobacco budworm and bollworm, did not have any detrimental effect upon the final egg hatch; however, the extended periods at 40° reduced the final effective fecundity significantly. Generally, peak egg production and hatch occurred when the larvae, pupae, and adults were exposed to 8 h at 35°, but when the period was extended to 16 h daily, fecundity decreased markedly. Henneberry et al. (*44*) confirmed the data on pink bollworms and found that the high temperatures interfered with the transfer of sperm. The abrupt, and virtually complete, response to extended periods of high temperatures appears to impose severe restrictions on a mathematical expression of the data; therefore, until the underlying processes are elaborated and integrated into a usable form, the effects of high temperatures on fecundity and fertility may be drawn from table 22.

As soon as the eggs are laid, the effects of temperature and humidity on their survival must be considered. Fye and Surber (*40*) have presented scattered points on a response surface. Until such a response surface with humidity and temperature-time exposure as the horizontal axes and the survival as the vertical axis is developed more fully, tables should be referred to directly (*40*). Generally, for *H. zea* and *H. virescens*, if the temperatures do not exceed 35° C, the mortality may be disregarded. During extended periods of exposure to 35° and low humidities (10 to 20 percent or less), some mortality will occur in beet armyworms, cabbage loopers, and pink bollworm eggs. If daily exposures to 35° are in excess of 8 h, considerable mortality

of saltmarsh caterpillar eggs will result. When periods of 40° exceed 4 h, considerable mortality of *Heliothis* spp., beet armyworm, cabbage looper, and pink bollworm eggs will occur. Any exposure of saltmarsh caterpillar eggs to 40° or higher must be of concern. The effects of high temperature on the various hemipteran pests and predators apparently have not been investigated.

Rain showers are known to dislodge insect eggs from plants, leaving them exposed to the higher temperatures of the soil surface and predation. Hatching larvae may also fail to reach the host plant.

Egg Losses to Parasitism

The numbers of eggs must be reduced by the number parasitized. Fye and Larsen (*35*) considered the impact of *Trichogramma minutum* on host eggs in cotton in southern Arizona. They concluded that with constant searching, *T. minutum* females could successfully search a minimum of 24 cm²/h or approximately 1,000 cm²/day.

Figure 7 is a graphic display of the data of Surber et al. (*70*) relating plant area to the heat input as degree days (55° Fahrenheit base) after planting. The linear regression equation is applicable with the independent variable (degree days with 55° F base) and the dependent variable (plant area) designated as logarithms. The regression for estimating plant area for Deltapine Smoothleaf is:

$$y = -5.5830 + 2.7193\,X \qquad (r^2 = 0.928) \qquad (10a)$$

For the variety Hopicala, the regression is:

$$y = -4.0393 + 2.3874\,X \qquad (r^2 = 0.976) \qquad (10b)$$

and for the long-staple Pima S-2, the regression is:

$$y = -5.2044 + 2.7202\,X \qquad (r^2 = 0.945) \qquad (10c)$$

where:

y = the log of the estimated area
x = the log of the accumulated degree days in degrees Fahrenheit, employing a 55° F threshold

With estimates of the area searched by the *Trichogramma* spp. and the plant area derived

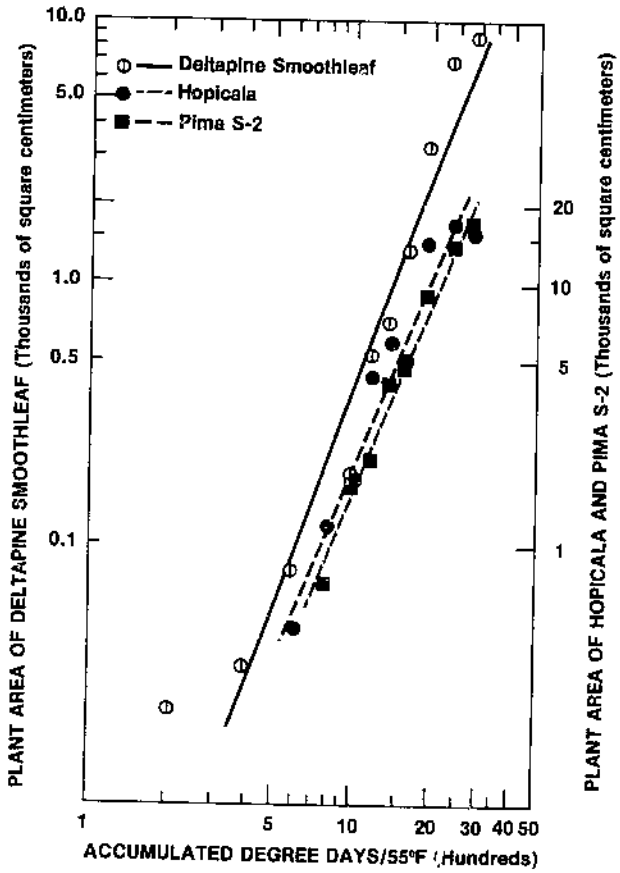

FIGURE 7.—Areas of 3 varieties of cotton in relation to accumulated degree days based on a threshold temperature of 55° F. Elaborated from data of Surber et al. (*70*).

either by the use of height (*70*) or heat input, an estimate of the number of *Trichogramma* necessary to parasitize the numbers of insect eggs present in an acre of cotton may be made. Early in the season, generally prior to June 10, a single *Trichogramma* may search over several plants. When the plants reach approximately 20 cm in height and 1,000 cm² in surface, a single *Trichogramma* will be able to search only one plant, and by early August, when the populations of cabbage loopers and bollworms in southern Arizona cotton increase, several *Trichogramma* per plant will be necessary. When the host eggs are in low densities, the daily fecundity of the females, determined by Fye and Larsen as nine eggs per day, will rarely be exceeded by the host eggs detected; however, under high densities of cabbage looper eggs that are common in southern Arizona cotton in August, the daily fe-

cundity of the *Trichogramma* female must be considered. Generally, cabbage loopers are not a problem in Arizona cotton, but during egg parasite introduction, they will divert the efforts of the introduced parasite from the target pest, generally bollworms. Fortunately, the host eggs are concentrated in the upper portions of the plant (*19*) as are the activities of the *Trichogramma* (*35*) and smaller numbers of the parasite may be effective.

Daily host egg availability is determined by equations 5, 6, 7, 8, 9, and 10, and the parasitized eggs may be subtracted to determine the populations escaping from the introduced parasites. The projection of the area searched by the parasite superimposed the total surface of the plants per acre or per plant, coupled with host egg availability, demonstrates the capabilities of the simulation approach to the development of workable experimental designs with a minimal expenditure of time and funds. Natural predation of eggs to larvae may be considered in a similar manner and will be discussed in detail with equation 15.

Numbers of Larvae

To initiate the model for larvae, the terms of the following equation must be evaluated:

$$L_n = L_{rn} + L_{hn} - L_{\ell n} - L_{\ell pun} \qquad (11)$$

where:

L_n = total number of larvae on day of initiation (n)

L_{rn} = residual larvae from day n-1

L_{hn} = number of larvae from egg hatch on day n

$L_{\ell n}$ = number of larvae lost to various causes on day n

$L_{\ell pun}$ = number of larvae pupating on day n

The terms of the equation must be further elaborated. The residual population at the time of model initiation is:

$$L_{rn} = \Sigma[L_h - L_\ell - L_{\ell pu}]_{(n\text{-}1 \ldots (n\text{-}x)} \qquad (12)$$

where:

L_{rn} = the residual larvae from day n-1

L_h = number of larvae from egg hatch each day

= number of larvae lost to various causes each day

$L_{\ell pu}$ = number of larvae pupating on each day

n-x = the earliest prior day on which an unpupated larva entered the population (expressed in RUD).

The numbers of individuals entering the larval population from the egg hatch are:

$$L_{hn} = \Sigma[L_{hn\text{-}1} + L_{hn\text{-}2} \ldots\ldots + L_{hn\text{-}x}] \qquad (13)$$

where:

L_{hn} = the total number of larvae hatching

$L_{hn\text{-}1}$ = number of larvae hatching from eggs laid on day n-1

$L_{hn\text{-}2}$ = number of larvae hatching from eggs laid on day n-2

$L_{hn\text{-}x}$ = number of larvae hatching from eggs laid on the earliest prior day from which unhatched eggs occur (expressed in RUD).

The larvae lost to mortality factors may be expressed:

$$L_{\ell n} = L_{\ell c} + L_{\ell bi} \qquad (14)$$

where:

L = number of larvae lost in day n to causes other than pupation

$L_{\ell c}$ = number of larvae lost to bioclimatic factors

L_{bi} = number of larvae lost to biotic factors

Larval Losses to Bioclimate

Several of the same bioclimatic factors resulting in the mortality of eggs also affect larvae. Little is known about the losses to overexposure to high temperatures and the attending desiccation; however, the loss is probably appreciable in the southwestern United States where extended peri-

ods of temperatures in excess of 38° C may occur daily, and the accompanying relative humidities frequently fall below 10 percent. In the early growing season, these stringent conditions may be further intensified by sustained winds that exceed 30 miles per hour. The effects of these conditions on cotton insect populations require further elaboration. In addition, little is known about the impact of the relatively violent thunderstorms that occur during July and August in Arizona. Development of improved marking techniques may aid in future investigations of these phenomena.

The effects of high soil temperatures upon mature larvae of pink bollworm falling on hot soil surfaces have been investigated by Pinter and Jackson (*64*). They found that soil temperatures of 51° to 65° C resulted in lethal body temperatures ranging from 46° to 53° that caused death in from 2.5 to 0.33 minutes, respectively. At the higher temperature, the larvae dropping to the ground were able to move only 0.2 m in an effort to escape the high temperatures. At temperatures under 50°, all but one insect survived a 10-min exposure, and most of the insects traveled at least 1 m. Fye and Bonham (*27*) have furnished regressions that will estimate the soil temperatures beneath the cotton plant, and Fye and Carranza (*33*) have furnished the shading factor for the cotton plants based on the plant height. With these data, the potential mortality of the larvae dropping to the ground may be estimated.

The data of Fye and Brewer (*30*) and Pinter and Jackson (*64*) indicate that the pink bollworms avoid the high soil temperatures. Fye (unpublished) has noted the same avoidance of high soil temperatures by pupating bollworms, tobacco budworms, and beet armyworms. Thus, the avoidance mechanism must be considered although a large proportion of the insects dropping from the plants will fall in the shade of the row unless deflected by leaves in the lower levels of the canopy.

Larval Losses to Biotic Factors

The total losses of larvae to biotic factors is expressed:

$$L_{lbi} = L_{lpa} + L_{lpr} + L_{lpt} \qquad (15)$$

where:

L_{lbi} = total losses of larvae to biotic factors

L_{lpa} = larval losses to parasites

L_{lpr} = larval losses to predators

L_{lpt} = larval losses to pathogens

The discussion of parasitism applied to eggs is similarly applicable to larvae, but the growth of the larvae may result in limited periods, during which hosts are vulnerable to attack. The age stratification technique developed in equations 3, 3a, and 3b are then applicable to delineate the periods of vulnerability. Superimposing information on the numbers of ovipositing parasites will enable an evaluation of the expected parasitism by naturally occurring or introduced parasites and provides a tool that analyzes not only the impact of an introduced organism, but also separates it from the effects of naturally occurring biotic controls.

The growth of immature forms also complicates the assessment of the impact of predators that attack a broad spectrum of prey. The differences in the nutritional or satiation values of the various sizes and species of prey for five predators have been developed as the prey index profile (PIP) (tables 3 and 4). A PV was assigned to a limited number of important prey in Arizona cotton. The PV of prey consumed daily by five species of predators is presented in table 23.

The age stratification of each species of potential prey then must be calculated (equations 4a, b, and c) and the total point value (TPV) available to the predators assessed:

$$TPV = TPV_E + TPV_L + TPV_P + TPV_A \qquad (16)$$

where:

TPV = total prey available in point values

TPV_E = total prey point values supplied by eggs

TPV_L = total prey point values supplied by larvae

TPV_P = total prey point values supplied by pupae

TPV_A = total prey point values supplied by adults

or:

$$TPV = PV_E(N_E) + (PV_L)_{1\ldots x} (N_L)_{1\ldots x} + PV_P(N_P) + PV_A(NA) \quad (16a)$$

where:

PV_E = point value for an egg of a species

N_E = number of eggs

$PV_{L_{1\ldots x}}$ = point value during each instar $(1\ldots x)$ of a larva (where x is the final instar)

$N_{L_{1\ldots x}}$ = number of larvae in each instar $(1\ldots x)$

PV_P = point value for a pupa

N_P = number of pupae

PV_A = point value for an adult

N_A = number of adults

Figure 8 is a schematic diagram of the PV assignment and the vulnerability pattern for a theoretical situation.

The PV consumed daily by the predators is presented in table 23. The total PV consumed during each instar was assumed constant (tables 3 and 4) and divided by the number of days in each instar of immaturity or adulthood in each temperature regimen (table 10) to determine the daily PV consumption at each temperature. The numbers of vulnerable prey in a given size class may be determined with the age stratification technique described in equations 3, 3a, and 3b, as can the numbers of predators that will feed on that size class of prey.

Actual numbers of prey are a critical factor because they determine the probability of a predator intercepting a prey in a given size class and, thus, provide the sequence for establishing the accumulation of PV leading to satiation. Thus, if a large prey has a relatively high probability of being intercepted and captured, satiation occurs quickly and the predator is not functioning as a predator until satiation has receded and hunger returns (*46*). Conversely, if the prey spectrum consists of large numbers of smaller prey, many more will be removed before satiation occurs. In very low prey densities, satiation is of little concern because any suitable prey encountered may be captured, and the satiation level is never reached. Under such conditions, highly mobile winged predators may leave the area with inadequate food and migrate to more bountiful locations. Such emigration is difficult to assess (*24*), but may be more critical to the functions of local predator populations than mortality. The relatively consistent predator

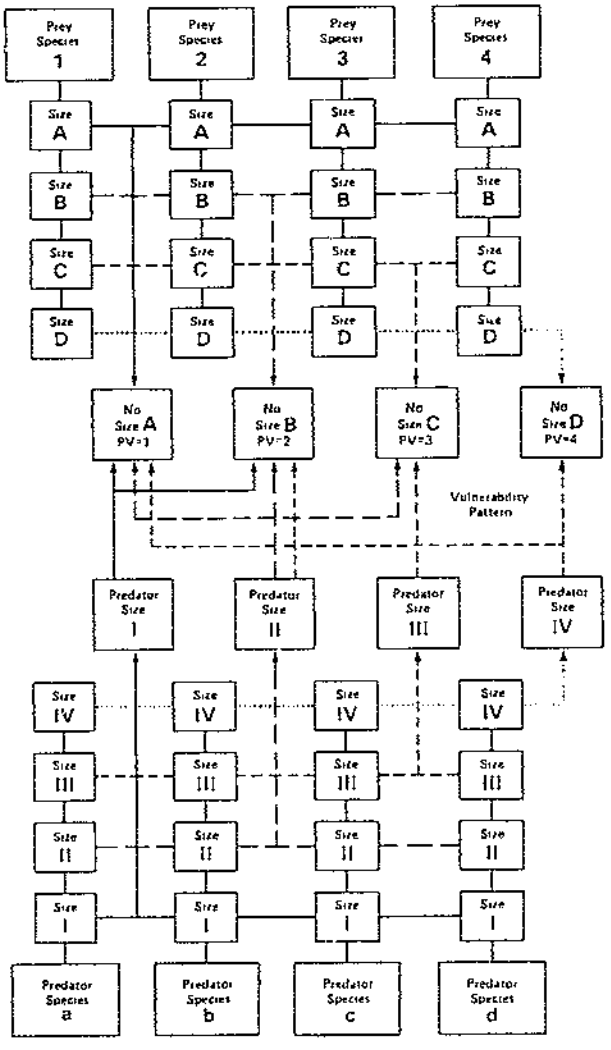

FIGURE 8.—Schematic diagram of the interrelations of 4 general predators and 4 acceptable prey, demonstrating the assessment of point values (PV) and the vulnerability of the prey.

populations described by Bryan et al. (*6*) for overall predator populations in crops grown in interspersed blocks attest to this mobility.

Table 24 incorporates the searching efficiency factors of the five predators derived from tables 4 and 9. The factors range from 0.9 in the smaller arenas with relatively immobile prey to 0.2 in the larger arenas with mobile prey. These estimates, determined under relatively ideal laboratory conditions, may be overestimates. The confinement that results in search and research and the favorable bias created by both predator and prey being attracted to the green bean slices is reflected by high capture rates in the laboratory studies. The arenas represent areas of cotton plants ranging in height from 15 to 80 cm (*70*), and the various prey and predators would be expected to be concentrated in the upper 45 cm of the plant (*19*); therefore, early in the season a single predator could be expected to search several plants effectively every 24 h. Later in the season, a single plant would be searched by an individual of most species of predators.

If we consider plant population of 30,000/acre, then assuming some overlap of the area searched, a population of 35,000 to 50,000 predators would be required to remove a totally vulnerable population of target prey daily. The large populations of predators are rarely attained under southern Arizona conditions (*4, 5, 6*), but may occur in localized situations (*6*); thus, a segment of the target population remains at the end of each 24-h period and, eventually, the consistent escapees will attain a size that reduces their vulnerability to predation (tables 1, 3, and 7). The estimates of the feeding and escapes may be obtained by elaborating the age stratification of the predators and the prey daily and using the probability of interception to determine the resulting overall populations.

The limited predation data available do not permit a sound simulation of the total predatory impact, but the underlying concept is presented in figure 8. The predation loss is one component of the total loss to be considered in the overall ecosystem (fig. 3). Systems to handle parallel losses to parasites and pathogens must be developed if these biotic factors are of consequence in the system.

Normal pupation (equations 17 and 19) will remove an additional segment from the larval population.

Numbers of Pupae

The number of pupae for each species at model initiation is:

$$P_n = P_{rn} + P_{pn} - P_{ln} - P_{an} \qquad (17)$$

where:

P_n = total number of pupae for the species on day n

P_{rn} = number of residual pupae from day n-1

P_{pn} = number of larvae pupating on day n ($=L_{lpun}$)

P_{ln} = number of pupae lost to causes other than adult emergence on day n

P_{an} = number of adults emerging on day n

The individual terms in equation 17 must be further elaborated:

$$P_{rn} = \Sigma[P_p - P_l - P_a]\, n{-}1 \ldots n{-}x \qquad (18)$$

where:

P_{rn} = number of residual pupae from n-1

P_p = number of larvae pupating each day

P_l = number of pupae lost to causes other than adult emergence each day

P_a = number of pupae lost as adult emergence

n^{-1} = day before initiation of the model

n-x = the earliest prior day on which an uneclosed pupa entered the population

$$P_{pn} = \Sigma[L_p \ldots . L_p](n{-}y) \ldots . (n{-}x) \qquad (19)$$

where:

P_{pn} = number of larvae pupating on day n

L_p = number of larvae pupating from a given daily cohort

n-y = the latest prior day from which a pupating larva comes

n-x = the earliest prior day from which a pupating larva comes

The number of pupating individuals are derived from a continuation of the developmental system presented in figure 3 and equations 3, 3a, and 3b with the available regression data presented in tables 14 and 16. If the pupa is from a species that pupates aerially on the plant, the accumulated developmental units should be derived from the canopy temperature regression data presented in table 14. If the pupae are from a soil-pupating species, the pupal period must be determined with the soil temperatures (table 16), (13), (28) and mortality from factors associated with the soil phase of the ecosystem.

Pupal Losses

The pupae lost to mortality factors may be expressed as follows:

$$P_{\ell n} = P_{\ell c} + P_{\ell cu} + P_{\ell bi} \qquad (20)$$

where:

$P_{\ell n}$ = total pupal losses on day n

$P_{\ell c}$ = pupal losses to climatic factors

$P_{\ell cu}$ = pupal losses to cultural practices

$P_{\ell bi}$ = pupal losses to biotic factors

Pupal Losses to Climatic Factors

We have previously discussed the mortality of pink bollworm prepupae subjected to the high soil temperatures beneath the plant, as discussed by Pinter and Jackson (*64*). The mortality during the pupal period (*16*) becomes appreciable when soil temperatures exceed 44° C. Fye and Bonham (*27*) have shown that mean daytime soil temperatures may approach 40° in portions of the row early in the season, but as the canopy closes, the temperatures become cooler. To attain a mean soil surface temperature of 40°, a number of hours in excess of 44° and 50° would be common in parts of the row that are unshaded. The data also show that a 12-h period in excess of 40° will result in a mortality of more than 92 percent (*16*). Soil surface temperatures in this range would be common in Arizona cotton at least until late July or early August, although sustained periods of temperatures in the range of 30° to 38° would also be common until late into the cotton-growing season and, therefore, may cause considerable mortality, particularly if these soils are dry.

If rainfall occurs during the pupal period, consideration must be given to the sealing action of the high velocity drops. When the cotton is young and the canopy coverage is relatively small, sealing action by the rainfall will result in at least an 80 percent reduction in the emergence of the adults (*20*). When the canopy covers approximately 30 percent of the row surface, a 70 percent reduction of moth emergence may be expected, and when the canopy cover exceeds 60 percent of the row surface, a 60 percent reduction may occur. Thus, a heavy rainstorm such as those common in southern Arizona during early July may effectively reduce populations of pink bollworms, although at that time the developing canopy may effectively reduce the rainfall impact (*20*).

Similar data are not available for the aerial pupating species in Arizona cotton; however, the data presented by Fye and Poole (*39*) indicate that the sustained high temperatures during the larval and pupal periods will effectively reduce fecundity, and in some cases, interfere with proper development and adult emergence of the insects.

Pupal Losses to Cultural Factors

During the summer growing season, two cultural practices must be considered as mortality factors. Irrigation may seal the insects in the soil (*20*) and pressures of cultivation may mechanically kill the soil pupating insects. Irrigation of naturally pupated bollworms and tobacco budworms in loose soil will reduce emergence 64 and 91 percent, respectively (R. E. Fye, unpublished data); however, irrigation does not significantly reduce the emergence of beet armyworms from pupal cells because the cells generally occur immediately below the surface of the soil. Reduction of the emergence pink bollworm ranges from insignificant (*20*) to 100 percent, apparently de-

pending upon the type of soil condition in which the insects pupate and degree of compaction by the irrigation. Apparently, any crusting created by irrigation results in some reduction of emergence by soil-pupating species.

The effects of cultivation are somewhat more difficult to assess because of the variability in cultivation equipment. Most growers leave a band approximately 15 cm in width on the top of the row to protect the young plants from excessive root pruning. Assuming that the mature larvae drop to the ground almost immediately beneath the plants, this band serves as a refugium for large percentages of the maturing insects while the plants are young (table 25). The main lepidopteran attacking the young cotton is the beet armyworm and, therefore, a higher percentage of survival of the insects produced early in the season could be expected. Generally, under Arizona conditions, the fruit on the cotton plants are not attacked by bollworms, tobacco budworms, or pink bollworms until the plants are approximately 35 cm tall, or about the same time as the first blooms appear; therefore, about 60 to 75 percent of these insects falling from the plant are vulnerable to cultivation mortality. In the case of pink bollworms, 80 percent of these insects would be killed in the rows in which the tires of the tractor ran. In the remaining four rows, 50 percent mortality of pink bollworms could be expected. Another 70 percent of the pupae surviving the cultivation pressures would be lost because of burial in the soil (*30*). In the case of bollworms and tobacco budworms, 90 percent of the insects in the cultivated portion of the row would be lost, and an additional 70 percent would be lost to burial. Cultivation generally ceases when the cotton is about 54 cm tall, and from that point on the most common cultural losses would be due to irrigation.

Pupal Losses to Biotic Factors

Knowledge of the losses of pupae to biotic factors is limited for southern Arizona cotton. Unpublished surveys (R. E. Fye) of insects and spiders inhabiting the soil surface indicate that relatively small numbers of predators exist throughout the year, and activity during the winter is extremely limited.

Preliminary studies of the feeding of field mice on insect pupae discussed above indicate that *Peromyscus maniculatus* and *P. merriami*, two species found in Arizona cotton, will feed on as many as 30 *Heliothis* pupae and 75 beet armyworm pupae daily. The mice apparently detect the pupae readily and prefer them to a seed diet. Populations of the mice may attain considerable numbers by late season, and, therefore, under certain conditions, the feeding of the mice on the pupae may be a mortality factor of consequence.

Adult Emergence

The number of adults emerging may be estimated:

$$P_{an} = \Sigma(P_a \ldots . P_a)_{(n-y)} \ldots . (n-x) \qquad (21)$$

where:

P_{an} = total number of adults emerging

P_a = number of adults emerging from a given daily cohort

n-y = latest prior day from which an emerging adult comes (equations 3, 3a, and 3b)

n-x = earliest prior day from which an emerging adult comes (equations 3, 3a, and 3b)

Adult Numbers

The total numbers of adults may be expressed:

$$A_n = A_{rn} + A_{en} - A_{cn} - A_{bin} - A_{mn} \qquad (22)$$

where:

A_n = total number of adults in the population

A_{rn} = number of residual adults from day n-1

A_{en} = number of adults emerging day n ($=P_{an}$)

A_{cn} = number of adults lost to climatic factors

A_{bin} = number of adults lost to biotic factors

A_{mn} = number of adults dying natural death

A breakdown of the A_m term similar to that presented for the eggs, larvae, and pupae (equations 6, 12, and 18) with the resulting number of adults multiplied by the proportion of females provides the $M_{A....A+Y}$ numbers for use in equation 7.

Adult Losses

If we disregard mortality through natural aging and consider the input into the successive generation only through the more critical oviposition of the females (equation 3b), little information is available on adult mortality. The roles of avian and mammalian predators have been investigated very little in field crops, and information on the impact of arthropod predation and bioclimatic factors is meager. Until these phenomena are thoroughly investigated and evaluated, the mortality of adult insects will remain a nebulous factor in the population dynamics of insects in the cotton ecosystem.

Model Continuation

After the model has been initiated, it may be continued by utilizing the developmental rates and mortality factors discussed above and employing the following basic equations with the data available.

$$E = E_r + E_o - E_h - E_l \quad (23)$$

where:

E = total number of eggs present in a given day

E_r = number of residual unhatched eggs

E_o = number of eggs laid

E_h = number of eggs hatched

E_l = number of eggs lost to other causes each day

$$L = L_r + L_h - L_l - L_p \quad (24)$$

where:

L = total number of larvae (nymphs) present on a given day

L_r = number of residual larvae (nymphs)

L_h = number of hatching eggs entering as larvae (nymphs)

L_l = number of larvae (nymphs) lost to other causes each day

L_p = number of mature larvae pupating (disregard this term for paurometabolous species and proceed directly to adulthood)

$$P = P_r + P_p - P_l - P_a \quad (25)$$

where:

P = total number of pupae present on a given day

P_r = number of residual pupae

P_p = number of pupating larvae entering as pupae

P_l = number of pupae lost to other causes each day

P_a = number of emerging adults

$$A = A_r + A_p - A_m - A_l \quad (26)$$

where:

A = total number of adults present on a given day

A_r = number of residual adults

A_p = number of emerging adults from pupae

A_m = Natural mortality of the adults

A_l = number of adults lost to other causes each day

OTHER FACTORS

Insecticide Impact

The impact of insecticides upon the various insect populations will not be considered in detail. Voluminous information is available on the subject, and the levels of kill have been determined with considerable accuracy. Therefore, when an

insecticide is applied, the impact on all insect populations within the cotton ecosystem must be assessed and the residual effects considered during degradation.

Migration

The twin nemeses of the insect population simulator, immigration and emigration, have been noted, but skirted in the prior discussion. The implications of insect movement have been discussed elsewhere (*24*), and the available data for species in the southern Arizona cotton ecosystems are limited. Fye (*14*) suggested that boll weevils may move in air currents, and indications are that early emerging, overwintering pink bollworms may move relatively long distances until growing cotton is available (R. E. Fye, unpublished data); however, hard data are wanting. Fortunately, modern technology is slowly providing improved marking and tracking systems that may ultimately resolve the problems associated with study of insect movement.

DISCUSSION

The rationale and advantages of the basic framework presented above have been discussed previously as concepts and as analytical tools (*21, 22, 23, 24*). The approach has been applied previously to the relatively simplistic boll weevil population dynamics in Arizona (*29*). Additional implications and pertinent examples of the various cotton insect ecosystem phenomena have been interjected into the discussion of the simulation, and the basic considerations are presented pictorially in figure 3. The preliminary status of the data base does not permit a full-scale simulation; however, the overall approach clearly displays difficulties associated with ecosystem analysis for any purpose, but demonstrates the potential of the concept to provide improved insight into entomological problems. Hopefully, additional data will reveal a number of facets that need not be considered in future simulations; however, until each factor is carefully investigated, disregarding or glossing over unknown areas through computation or inference will undoubtedly lead to tenuous conclusions.

Various facets of the data presented have been used successfully for the evaluation of introductions of *Chelonus blackburni* Cameron and *Bracon kirkpatricki* (Wilkinson) for control of the pink bollworm in southern Arizona (*4, 5, 6*). The method has provided a means for partitioning the various mortality factors and determining their impact in the system; thus, the action of some naturally occurring mortality factors has been separable from the action of the introduced organisms. The method for "colliding" biotic control factors with pest populations could prove invaluable in considerations for introducing exotic control organisms and evaluating the impact of naturally occurring mortality factors. The approach is very much open for improved conceptual development. Until similar frameworks are provided and elaborated for basic entomological problems, the overworked empirical approach to problem solution may fail to detect critical underlying factors in arthropod population dynamics.

CONCLUSIONS

The development of the data and discussion in this study have provided the following insights:

1. Modeling-simulation techniques frequently detect previously unsuspected underlying causal mechanisms.

2. The discipline of modeling-simulation techniques results in improved insights by the research scientist.

3. The biological-ecological reactions of insect populations are extremely variable.

4. The broad variance of data from a single location indicates the combination of data from several locales or sources (*43*) to provide a simulation may be hazardous.

5. Partitioning the impact of all mortality factors is difficult, but necessary, to separate the

effects of introduced control measures from those that are naturally occurring.

6. Heat input, as described by temperature, may be successfully used as a simulation base.

7. Very little is known about predation by arthropod populations.

8. The impact of natural predator populations is frequently over- or underrated.

9. Without the proper knowledge of predator impact, the interrelations of insect populations in an ecosystem cannot be delineated.

10. Adequate data on migration, overwintering and mortality, and suppression by bioclimate are lacking.

11. Laboratory cultures may not behave as wild populations.

12. Laboratory tests that provide correct behavioral responses are difficult to develop and analyze.

13. The use of a sequence of regressions to estimate a final parameter may be hazardous if the confidence limits of one of the regression estimates are broad.

LITERATURE CITED

(1) ALLEN, J., GONZALEZ, D., and GOKHALE, D. V.
1972. SEQUENTIAL SAMPLING PLANS FOR THE BOLL WORM, *HELIOTHIS ZEA* Environmental Ent. 1: 771-780.

(2) BEARDS, G. W., and STRONG, F. E.
1966. PHOTOPERIOD IN RELATION TO DIAPAUSE IN *LYGUS HESPERUS* KNIGHT. Hilgardia 37: 345-362.

(3) BONHAM, C. D., and FYE, R. E.
1970. ESTIMATION OF WINTERTIME SOIL TEMPERATURES. Jour. Econ. Ent. 63: 1051-1053.

(4) BRYAN, D. E., FYE, R. E., JACKSON, C. G., and PATANA, RAYMOND.
1973. RELEASES OF *BRACON KIRKPATRICKI* (WILKINSON) AND *CHELONUS BLACKBURNI* CAMERON FOR PINK BOLLWORM CONTROL IN ARIZONA. U.S. Dept. Agr. Prod. Res. Rpt. 150, 22 pp.

(5) _____ FYE, R. E., JACKSON, C. G., and PATANA, RAYMOND.
1973. RELEASES OF PARASITES FOR SUPPRESSION OF PINK BOLLWORMS IN ARIZONA. U.S. Dept. Agr., Agr. Res. Serv. ARS W-7, 8 pp.

(6) _____ FYE, R. E., JACKSON, C. G., and PATANA, RAYMOND.
1976. NONCHEMICAL CONTROL OF PINK BOLLWORMS. U.S. Dept. Agr., Agr. Res. Serv. ARS W-39, 26 pp.

(7) BUTLER, G. D., JR.
1966. DEVELOPMENT OF SEVERAL PREDACEOUS HEMIPTERA IN RELATION TO TEMPERATURE. Jour. Econ. Ent. 59: 1306-1307.

(8) _____ and RITCHIE, P. L., JR.
1970. DEVELOPMENT OF *CHRYSOPA CARNEA* AT CONSTANT AND FLUCTUATING TEMPERATURES. Jour. Econ. Ent. 63: 1028-1030.

(9) _____ and WARDECKER, A.L.
1971. TEMPERATURE AND THE DEVELOPMENT OF EGGS AND NYMPHS OF *LYGUS HESPERUS* Ann. Ent. Soc. Amer. 64: 144-145.

(10) _____ and WARDECKER, A. L.
1973. *COLLOPS VITTATUS* (COLEOPTERA: MALACHIIDAE): DEVELOPMENT AT CONSTANT TEMPERATURES. Ann Ent. Soc. Amer. 66: 1168-1170.

(11) CHAMPLAIN, R. A., and SHOLDT, L. L.
1967. TEMPERATURE RANGE FOR DEVELOPMENT OF IMMATURE STAGES OF *GEOCORIS PUNCTIPES* (HEMIPTERA: LYGAEIDAE). Ann. Ent. Soc. Amer. 60: 883-885.

(12) EWING, K. P., and IVY, E. E.
1943. SOME FACTORS INFLUENCING BOLLWORM POPULATIONS AND DAMAGE. Jour. Econ. Ent. 36: 602-606.

(13) FOSTER, K., and FYE, R. E.
1973. SOIL TEMPERATURE SIMULATION. Jour. Ariz. Acad. Sci. 8: 51-55.

(14) FYE, R. E.
1968. SPREAD OF THE BOLL WEEVIL BY DRAINAGE WATER AND AIR CURRENTS. Jour. Econ. Ent. 61: 1418-1424.

(15) _____
1971. TEMPERATURE IN THE PLANT PARTS OF SHORT-STAPLE COTTON. Jour. Econ. Ent. 64: 1432-1435.

(16) _____
1971. MORTALITY OF MATURE LARVAE OF THE PINK BOLLWORM CAUSED BY HIGH SOIL TEMPERATURES. Jour. Econ. Ent. 64: 1568-1569.

(17) _____
1972. POPULATIONS OF LEPIDOPTEROUS LARVAE IN OUTER AND INNER PORTIONS OF A COTTON FIELD. Jour. Econ. Ent. 65: 287-288.

(18) _____
1972. TEMPERATURES NEAR THE SURFACE OF COTTON LEAVES. Jour. Econ. Ent. 65: 1209-1210.

(19) _____
1972. PRELIMINARY INVESTIGATIONS OF VERTICAL DISTRIBUTIONS OF FRUITING FORMS AND INSECTS ON COTTON PLANTS. Jour. Econ. Ent. 65: 1410-1414.

(20) _____
1973. POTENTIAL MORTALITY OF PINK BOLLWORMS CAUSED BY SUMMER THUNDERSHOWERS. Jour. Econ. Ent. 66: 531-532.

(21) _____
1973. THE DEVELOPMENT OF MODELS FOR INTEGRATED PEST MANAGEMENT IN COTTON. PROC. OF SYMPOSIUM: "APPLICATIONS OF SYSTEMS METHODS TO CROP PRODUCTION." Miss. State Agr. and Forestry Expt. Sta., June 7-8, 1973.

(22) _____
1974. ECOSYSTEM ANALYSIS FOR THE INTRODUCTION OF INTEGRATED PEST CONTROL. HortScience 9: 129-131.

(23) _____
1974. MODELING OF COTTON INSECT POPULATIONS. U.S. Dept. Agr., Agr. Res. Serv. ARS W-14, 6 pp.

(24) _____
1974. POPULATIONS DEFINED AND APPROACHES TO MEASURING POPULATION DENSITY, DISPERSAL, AND DISPERSION. *In* F. G. Maxwell and F. A. Harris, Eds., Proc. Summer Inst. Biol. Contr. of Plant Insects and Diseases. University Press of Mississippi, Jackson, pp. 46-61.

(25) _____
1975. PLANT HOST SEQUENCE OF MAJOR COTTON INSECTS IN SOUTHERN ARIZONA. U.S. Dept. Agr., Agr. Res. Serv. ARS W-24, 9 pp.

(26) _____ and BONHAM, C. D.
1969. ESTIMATING TEMPERATURES AND HEAT FLUX IN INSECT ENVIRONMENTS IN STUBBED COTTON FIELDS IN THE WINTER. Jour. Econ. Ent. 62: 823-829.

(27) FYE, R. E. and BONHAM, C.D.
1970. SUMMER TEMPERATURES OF THE SOIL SURFACE AND THEIR EFFECT ON SURVIVAL OF BOLL WEEVILS IN FALLEN COTTON SQUARES. Jour. Econ. Ent. 63: 1599-1602.

(28) _____ and BONHAM, C. D.
1971. TEMPERATURE IN THE PLANT PARTS OF LONG-STAPLE COTTON. Jour. Econ. Ent. 64: 636-637.

(29) _____ and BONHAM, C. D.
1972. RELATIONSHIP OF TEMPERATURES TO BOLL WEEVIL COMPLEX POPULATIONS IN ARIZONA. U.S. Dept. Agr. Prod. Res. Rpt. 136, 14 pp.

(30) _____ and BREWER, H. L.
1975. PUPATION SITES OF PINK BOLLWORMS: POTENTIAL MORTALITY RESULTING FROM CULTIVATION OF IRRIGATED COTTON. U.S. Dept. Agr., Agr. Res. Serv. ARS W-32, 10 pp.

(31) _____ and CARRANZA, R. L.
1971. CANOPIES OF DELTAPINE SMOOTHLEAF AND PIMA S-2 COTTON PLANTS. Jour. Econ. Ent. 64: 1318-1319.

(32) _____ and CARRANZA, R. L.
1972. MOVEMENT OF INSECT PREDATORS FROM GRAIN SORGHUM TO COTTON. Environmental Ent. 1: 790-791.

(33) _____ and CARRANZA, R. L.
1973. COTTON PESTS: OVERWINTERING OF THREE LEPIDOPTEROUS SPECIES IN ARIZONA. Jour. Econ. Ent. 66: 657-659.

(34) _____ KUEHL, R. O., and BONHAM, C. D.
1969. DISTRIBUTIONS OF INSECT PESTS IN COTTON-FIELDS. U.S. Dept. Agr. Misc. Publ. 1140, 32 pp.

(35) _____ and LARSEN, D. J.
1969. PRELIMINARY EVALUATION OF *TRICHOGRAMMA MINUTUM* AS A RELEASED REGULATOR OF LEPIDOPTEROUS PESTS OF COTTON. Jour. Econ. Ent. 62: 1291-1296.

(36) _____ and MAY, C. J.
1974. DEVELOPMENT, FECUNDITY, AND LONGEVITY OF THE COTTON LEAFPERFORATOR IN RELATION TO TEMPERATURE. U.S. Dept. Agr., Agr. Res. Serv. ARS W-12, 5 pp.

(37) _____ and MCADA, W. C.
1972. LABORATORY STUDIES ON THE DEVELOPMENT, LONGEVITY, AND FECUNDITY OF SIX LEPIDOPTEROUS PESTS OF COTTON IN ARIZONA. U.S. Dept. Agr. Tech. Bul. 1454, 73 pp.

(38) _____ PATANA, RAYMOND, and MCADA, W. C.
1969. DEVELOPMENTAL PERIODS FOR BOLL WEEVILS REARED AT SEVERAL CONSTANT AND FLUCTUATING TEMPERATURES. Jour. Econ. Ent. 62: 1402-1405.

(39) _____ and POOLE, H. K.
1971. EFFECT OF HIGH TEMPERATURES ON FECUNDITY AND FERTILITY OF SIX LEPIDOPTEROUS PESTS OF COTTON IN ARIZONA. U.S. Dept. Agr. Prod. Res. Rpt. 131, 8 pp.

(40) FYE, R. E. and SURBER, D. E.
1971. EFFECTS OF SEVERAL TEMPERATURE AND HUMIDITY REGIMENS ON EGGS OF SIX SPECIES OF LEPIDOPTEROUS PESTS OF COTTON IN ARIZONA. Jour. Econ. Ent. 64: 1138-1142.

(41) GONZALEZ, D., VAN DEN BOSCH, R., ORPHANIDES, G. M., DAWSON, L. H., and WHITE, C.
1967. POPULATION ASSESSMENT OF COTTON BOLLWORM IN RELATION TO PEST CONTROL PRACTICES. Calif. Agr. 21: 12-14.

(42) GROSENBAUGH, L. R.
1965. GENERALIZATION AND REPARAMETERIZATION OF SOME SIGMOID AND OTHER NONLINEAR FUNCTIONS. Biometrics 21: 708-714.

(43) HARTSTACK, A. W., JR., WITZ, J. A., HOLLINGSWORTH, J. P., and others.
1976. MOTHZV-2: A COMPUTER SIMULATION OF *HELIOTHIS ZEA* AND *HELIOTHIS VIRESCENS* POPULATIONS DYNAMICS. U.S. Dept. Agr., Agr. Res. Serv. ARS S-127, 55 pp.

(44) HENNEBERRY, T. J., FLINT, H. M., and BARIOLA, L. A.
1977. EFFECTS OF TEMPERATURE ON PINK BOLLWORM MATING, SPERM TRANSFER, OVIPOSITION AND EGG VARIABILITY. Environmental Ent. 6: 513-517.

(45) HILL, B. G., MCNEW, R. W., YOUNG, J. H., and RUTH, W. E.
1975. THE EFFECTS OF SAMPLING UNIT SIZE IN SOME SOUTHWESTERN OKLAHOMA COTTON INSECTS. Environmental Ent. 4: 491-494.

(46) HOLLING, C. S.
1963. AN EXPERIMENTAL COMPONENT ANALYSIS OF POPULATION PROCESSES. Memoirs Ent. Soc. Canada 32: 22-32.

(47) IRWIN, M. E., GILL, R. W., and GONZALEZ, D.
1974. FIELD-CAGE STUDIES OF NATIVE EGG PREDATORS OF THE PINK BOLLWORM IN SOUTHERN CALIFORNIA COTTON. Jour. Econ. Ent. 67: 193-196.

(48) JAMESON, E., JR.
1952. FOOD OF DEER MICE *PEROMYSCUS MANICULATUS* AND *P. BOYLEI* IN NORTHERN SIERRA NEVADA, CALIFORNIA. Jour. Mammology 33: 50-60.

(49) KUEHL, R. O., and FYE, R. E.
1970. EFFICIENCY OF GRID STRATIFICATION IN COTTON FIELDS FOR COTTON INSECT SURVEYS. Jour. Econ. Ent. 63: 1864-1866.

(50) _____ and FYE, R. E.
1972. AN ANALYSIS OF THE SAMPLING DISTRIBUTIONS OF COTTON INSECTS IN ARIZONA. Jour. Econ. Ent. 65: 855-860.

(51) LANGSTON, D. T., and WATSON, T. F.
1975. INFLUENCE OF GENETIC SELECTION ON DIAPAUSE TERMINATION OF THE PINK BOLLWORM. Amer. Ent. Soc. Ann. 68: 1102-1106.

(52) LEIGH, T. F.
1966. A REPRODUCTIVE DIAPAUSE IN *LYGUS HESPERUS* KNIGHT. Jour. Econ. Ent. 59: 1280-1281.

(53) LINGREN, P. D., RIDGWAY, R. L., and JONES, S. L.
1968. CONSUMPTION BY SEVERAL COMMON ARTHROPOD PREDATORS OF EGGS AND LARVAE OF TWO *HELIOTHIS* SPECIES THAT ATTACK COTTON. Ann. Ent. Soc. Amer. 61: 613-618.

(54) MCKINION, J. M., BAKER, D. N., HESKETH, J. D., and JONES, J. W.
1975. SIMCOT II: SIMULATION OF COTTON GROWTH AND YIELD. *In* Computer Simulation of a Cotton Production System. U.S. Dept. Agr., Agr. Res. Serv. ARS S-52, pp. 27-82.

(55) NIELSON, M. W., and CURRIE, W. E.
1960. BIOLOGY OF THE CONVERGENT LADY BEETLE WHEN FED A SPOTTED ALFALFA APHID DIET. Jour. Econ. Ent. 53: 257-259.

(56) _____ and HENDERSON, J. A.
1959. BIOLOGY OF *COLEOPS VITTATUS* (SAY) IN ARIZONA AND FEEDING HABITS OF SEVEN PREDATORS OF THE SPOTTED ALFALFA APHID. Jour. Econ. Ent. 52: 159-162.

(57) NOBLE, L. W.
1969. FIFTY YEARS OF RESEARCH ON THE PINK BOLL WORM IN THE UNITED STATES. U.S. Dept. Agr. Agr. Handb. 357, 62 pp.

(58) ORPHANIDES, G. M., GONZALEZ, D., and BARLETT, B. R.
1971. IDENTIFICATION AND EVALUATION OF PINK BOLLWORM PREDATORS IN SOUTHERN CALIFORNIA. Jour. Econ. Ent. 64: 421-424.

(59) PATANA, RAYMOND.
1969. REARING COTTON INSECTS IN THE LABORATORY. U.S. Dept. Agr. Prod. Res. Rpt. 108, 6 pp.

(60) PATANA, R., and MCADA, W. C.
1973. TOBACCO BUDWORMS: USE OF DRY DIET FLAKES IN REARING. Jour. Econ. Ent. 66: 817-818.

(61) PERKINS, P. V., and WATSON, T. F.
1972. BIOLOGY OF *NABIS ALTERNATUS* (HEMIPTERA: NABIDAE). Ann. Ent. Soc. Amer. 65: 54-57.

(62) _____ and WATSON, T. F.
1972. *NABIS ALTERNATUS* AS A PREDATOR OF *LYGUS HESPERUS*. Ann Ent. Soc. Amer. 65:626-629.

(63) PIETERS, E. P., and STERLING, W. L.
1974. AGGREGATION INDICES OF COTTON ARTHROPODS IN TEXAS. Environmental Ent. 3: 598-600.

(64) PINTER, P. M., JR., and JACKSON, R. D.
1976. THERMAL RELATIONS AFFECTING SURVIVAL OF PINK BOLLWORM LARVAE BETWEEN CUTOUT AND PUPATION. Environmental Ent. 5: 853-858.

(65) SEVACHERIAN, V., and STERN, V. M.
1972. SPATIAL DISTRIBUTION PATTERNS OF LYGUS BUGS IN CALIFORNIA COTTON FIELDS. Environmental Ent. 1: 695-704.

(66) STAPLETON, H. N., BUXTON, D. R., WATSON, F. L., and others.
1973. COTTON: A COMPUTER SIMULATION OF COTTON GROWTH. Ariz. Agr. Expt. Sta. Tech. Bul. 206, 124 pp.

(67) STERLING, W. L., and PIETERS, E. P.
1974. A SEQUENTIAL SAMPLING PACKAGE FOR KEY COTTON ARTHROPODS IN TEXAS. Tex. Agr. Expt. Sta. Dept. of Ent. Tech. Rpt. 74-32, 28 pp.

(68) STONER, ADAIR, METCALFE, A. M., and WEEKS, R. E.
1975. SEASONAL DISTRIBUTION, REPRODUCTIVE DIAPAUSE, AND PARASITIZATION OF THREE *NABIS* SPP. IN SOUTHERN ARIZONA. Environmental Ent. 4: 211-214.

(69) STRONG, F. E., SHELDAHL, J. A., HUGHES, P. R. and HUSSEIN, E. M. K.
1970. REPRODUCTIVE BIOLOGY OF *LYGUS HESPERUS* KNIGHT. Hilgardia 40:105-147.

(70) SURBER, D. E., FYE, R. E., BONHAM, C. D., and OWENS, C. D.
1974. SURFACE AREA OF DELTAPINE SMOOTHLEAF, HOPICALA, AND PIMA S-2 COTTON PLANTS. U.S. Dept. Agr., Agr. Res. Serv. ARS W-20, 7 pp.

(71) TAMAKI, G., MCGUIRE, J. U., and TURNER, J. E.
1974. PREDATOR POWER AND EFFICACY: A MODEL TO EVALUATE THEIR IMPACT. Environmental Ent. 3: 625-630.

(72) TAUBER, M. J., and TAUBER, C. A.
1976. INSECT SEASONALITY: DIAPAUSE MAINTENANCE, TERMINATION, AND POSTDIAPAUSE DEVELOPMENT. Ann. Rev. of Ent. 21: 81-107.

(73) TAYLOR, E. J.
1949. A LIFE HISTORY STUDY OF *NABIS ALTERNATUS*. Jour. Econ. Ent. 42: 991.

796-769 O - 79 - 5

(74) TUTTLE, D. M., WENE, G. P., and SHEETS, L. W.
1961. THE COTTON LEAFPERFORATOR AND ITS CONTROL IN ARIZONA. Jour. Econ. Ent. 54:67-70.

(75) VAN DEN BOSCH, R., and HAGEN, K. S.
1966. PREDACIOUS AND PARASITIC ARTHROPODS IN CALIFORNIA COTTON FIELDS. Calif. Expt. Sta. Bul. 820, 32 pp.

(76) WALKER, J. K., JR.
1957. A BIOLOGICAL STUDY OF *COLLOPS BALTEATUS* LEC. AND *COLLOPS VITTATUS* (SAY). Jour. Econ. Ent. 50: 395-399.

(77) WATSON, T. F., and JOHNSON, P. H.
1972. LIFE CYCLE OF THE COTTON LEAFPERFORATOR. Prog. Agr. in Ariz. 24: 12-13.

(78) _____ LINDSEY, M. L., and SLOSSER, J. E.
1973. EFFECT OF TEMPERATURE, MOISTURE, AND PHOTOPERIOD ON TERMINATION OF DIAPAUSE IN THE PINK BOLLWORM. Environmental Ent. 2: 967-970.

(79) WELLSO, S. G., and ADKISSON, P. L.
1964. PHOTOPERIOD AND MOISTURE AS FACTORS INVOLVED IN THE TERMINATION OF DIAPAUSE IN THE PINK BOLLWORM *PECTINOPHORA GOSSYPIELLA*. Ann Ent. Soc. Amer. 57:170-173.

(80) WERNER, F. G., and BUTLER, G. D., JR.
1975. THE REDUVIIDS AND NABIDS ASSOCIATED WITH ARIZONA CROPS. Ariz. Agr. Expt. Sta. Tech. Bul. 133, 12 pp.

(81) WHITAKER, J. O., JR.
1966. FOOD OF *MUS MUSCULUS, PEROMYSCUS MANICULATUS BAIRDI* AND *PEROMYSCUS LEUCOPUS* IN VIGO COUNTY, INDIANA. Jour. Mammology. 47: 473-468.

(82) WILLIAMS, O.
1959. FOOD HABITS OF THE DEER MOUSE. Jour. Mammology. 40: 415-419.

APPENDIX A

Table 1.—*Food acceptance by hemipterous predators in close confines*

Prey species	Stage[1]	Percentage of prey accepted by instar[1] N1	N2	N3	N4	N5	Adult
		Sinea confusa					
Lygus hesperus	N1	100	93	100	93	90	50
	N2	90	90	100	92	75	80
	N3	90	100	100	100	100	100
	N4	44	100	100	100	100	100
	N5	10	50	100	100	100	100
	Ad	—	0	17	60	100	100
Aphis gossypii	Ad	70	65	75	25	45	53
Heliothis zea	E	0	25	0	60	20	0
	L1	30	86	100	93	100	90
	L2	0	100	100	89	57	100
	L3	0	0	71	44	100	100
	L4	—	—	17	67	66	80
Trichoplusia ni	E	0	40	50	20	0	0
	L1	100	88	100	100	100	94
	L2	50	75	100	83	100	100
	L3	0	33	57	57	55	100
	L4	0	0	33	20	80	100
Pectinophora gossypiella	E	28	17	44	0	5	5
Buccalatrix thurberiella	L4	86	67	100	100	83	60
	L5	81	89	100	100	100	83
		Zelus renardii					
Lygus hesperus	N1	70	100	100	100	88	100
	N2	60	100	100	100	100	100
	N3	20	100	100	100	100	100
	N4	20	80	100	100	100	100
	N5	0	20	60	100	100	100
	Ad	—	17	57	88	100	100
Aphis gossypii	Ad	13	19	60	69	38	40
Heliothis zea	E	0	33	22	0	0	0
	L1	100	100	92	63	100	90
	L2	60	100	89	100	83	83
	L3	0	11	50	83	100	100
	L4	—	—	0	0	0	60

Prey species	Stage[1]	Percentage of prey accepted by instar[1] N1	N2	N3	N4	N5	Adult
		Zelus renardii—Continued					
Trichoplusia ni	E	0	15	25	0	0	20
	L1	95	100	100	100	100	90
	L2	33	78	100	83	86	100
	L3	—	25	33	67	83	80
	L4	—	60	14	29	33	100
Pectinophora gossypiella	E	0	0	0	0	0	0
Bucculatrix thurberiella	L4	40	90	80	38	69	70
	L5	30	100	100	80	80	88
		Nabis alternatus					
Lygus hesperus	N1	50	100	83	83	100	80
	N2	80	50	60	80	100	100
	N3	50	80	80	100	100	100
	N4	60	50	100	82	100	80
	N5	0	33	83	80	67	75
	Ad	—	—	0	0	13	0
Aphis gossypii	Ad	93	80			65	100
Heliothis zea	E	29	88	40	30	42	31
	L1	100	100	100	100	100	100
	L2	0	20	57	80	60	70
	L3	—	0	29	22	20	33
Trichoplusia ni	E	40	90	86	8	36	85
	L1	94	100	56	92	92	98
	L2	50	43	83	80	93	89
	L3	17	0	14	100	40	10
	L4	—	—	—	57	40	—
Pectinophora gossypiella	E	75	31	80	71	13	32
Bucculatrix thurberiella	L4	75	90	75	100	100	100
	L5	67	100	80	60	100	100

[1]E, egg; N, nymph; L, larva; Ad, Adult. Arabic numeral denotes instar.

Table 2.—*Prey consumption (Prey Index Profile - PIP) by various stages of hemipterous predators*

Prey		Prey consumed[1]						Point value (PV)
Species	Stage[2]	1st Instar	2d Instar	3d Instar	4th Instar	5th Instar	Adult	
				Sinea confusa				
Trichoplusia ni	E	17.3± 6.0(11-33)						1.0
	L1	14.0± 3.5(9-24)	22.9± 3.4(17-30)	34.8± 5.0(24-44)	78.5±30.3(49-135)			1.2
	L2	6.8± 2.5(4-16)	7.9± 3.3(6-17)	11.9± 3.8(6-20)	21.5± 5.7(14- 26)			2.6
	L3			12.9± 7.1(4-34)	27.1±20.8(12- 97)	54.9+21.4(28-95)	125.0+101.9(16-305)	3.3
	L4					12.6± 3.3(8-22)	21.2± 13.9(6- 63)	14.5
Heliothis zea	E		(3)					
	L1	10.4± 2.1(7-14)	15.5± 2.6(10-20)	29.4± 7.5(19-45)				1.7
	L2	6.0± 1.3(4- 8)	8.5± 2.2(5-13)	14.8± 2.8(10-20)	37.7± 7.7(28- 56)			2.9
	L3			9.4± 2.0(6-13)	17.1± 3.2(12- 22)	48.3±10.3(36-74)	117.5± 60.3(19-231)	6.4
	L4				11.6± 3.9(8- 23)	31.7±12.7(19-52)	60.1± 41.6(21-158)	9.4
Bucculatrix thurberiella	L4	12.4± 4.7(7-24)	26.1±16.4(13-84)					1.0
	L5		6.8± 1.8(3-12)	9.4± 2.7(5-14)	16.2± 4.6(10- 28)	46.3±12.9(31-78)	197.3±272.4(14-966)	3.8
Pectinophora gossypiella	L4				5.0± 2.3(1- 10)			[4]17.0
Lygus	N1	17.4± 5.3(11-29)	26.9± 6.6(18-46)					1.0
	N2	9.8± 2.6(6-16)	16.3± 4.2(8-23)	23.2± 5.6(17-36)				1.8
	N3			13.9± 2.4(10-18)	27.8± 6.1(17- 38)			3.0
	N4			8.5± 3.7(3-17)	14.7± 5.0(7- 27)	25.9± 9.1(16-45)	39.3± 16.0(14- 75)	4.9
	N5				7.9± 2.5(5- 12)	17.4± 4.1(14-28)	18.9± 9.8(5- 43)	9.1
	Ad					13.3± 3.1(5-18)	16.2± 11.7(3- 40)	11.9
Aphis gossypii	Ad	38.1±12.9(22-65)	39.7±11.6(23-68)	55.2±14.8(37-83)				.7
				Zelus renardii				
Trichoplusia ni	E	9.8± 3.0(5-16)	22.0± 5.6(16-27)					1.0
	L1	8.0± 2.2(5-13)	15.7± 4.3(12-28)	33.1± 5.6(22-43)				1.2
	L2	4.3± 1.7(2- 8)	10.7± 3.1(4-17)	17.0± 4.9(9-27)	40.9± 7.2(24- 56)			2.3
	L3			6.8± 1.4(5- 9)	12.2± 3.1(5- 18)	32.0± 7.0(21-51)	164.0±100.1(23-444)	5.9
	L4				7.2± 2.7(3- 12)	17.9± 7.3(10-36)	129.2±102.8(9-305)	12.5
Heliothis zea	E		(3)					
	L1	8.7± 3.0(5-18)	16.1± 4.8(10-26)	32.4± 8.4(19-57)				1.2
	L2	3.6± 1.2(2- 6)	9.2± 2.5(5-13)	18.0± 4.3(7-25)	41.6± 7.2(30- 60)			2.2
	L3			8.1± 2.5(5-13)	20.6± 5.0(15- 35)	49.9±13.2(23-81)	147.4±104.8(5-387)	4.4
	L4					30.8±12.0(16-52)	119.7± 98.1(15-381)	5.8
Bucculatrix thurberiella	L4	12.7± 4.8(3-22)	18.7± 9.4(11-51)					1.1
	L5		6.5± 2.2(3-13)	9.2± 3.0(5-15)	16.7± 4.5(8- 26)	40.0± 8.7(18-57)	59.2± 37.7(14-158)	4.5

Pectinophora gossypiella	L4				6.7± 6.4(1- 23)			[4]13.4
Lygus	N1	9.8± 2.6(4-16)	23.8± 7.1(9-37)					1.0
	N2	8.4± 4.0(2-18)	15.6± 4.1(8-21)	30.2± 6.4(21-42)				1.2
	N3			15.9± 4.3(9-25)	35.4± 8.2(19- 56)			2.5
	N4			9.1± 2.6(4-13)	19.5± 4.7(11- 32)	37.8±10.5(21-58)	65.1± 27.9(20-125)	4.6
	N5				11.1± 4.1(3- 18)	22.1± 7.0(11-37)	27.0± 15.3(7- 54)	8.1
	Ad					13.7± 5.2(7-22)	26.9± 9.4(10- 43)	13.1
Aphis gossypii	Ad	30.2± 7.8(21-50)	34.4 ±12.6(23-60)	88.3±27.4(59-134)				.6
				Nabis alternatus				
Trichoplusia ni	E	8.8± 4.5(2-18)	9.0± 3.3(2-12)					1.0
	L1	5.3± 3.0(2-12)	5.1± 2.9(2-12)					1.6
	L2		2.8± 1.1(1- 4)	5.1± 3.3(2- 14)	9.2± 3.9(5- 16)			3.2
	L3			5.2± 3.8(1- 13)	7.3± 5.1(2- 21)	22.1±11.8(8-42)	129.8± 75.5(30-282)	3.4
Heliothis zea	E	8.5± 2.0(5-12)	17.1± 6.6(7-26)					1.0
	L1	4.0± 2.5(0-10)	5.1± 2.5(1- 9)					2.1
	L2		1.5± 1.5(0- 4)	2.5± 1.2(1- 4)	8.2± 4.0(4- 17)			6.0
	L3			1.8± 1.3(0- 5)	3.8± 1.7(2- 7)	8.4± 4.2(3-18)	72.6± 42.5(24-173)	9.4
Bucculatrix thurberiella	L4	9.5± 4.2(3-15)	7.8± 3.7(3-18)					1.0
	L5		2.3± 1.5(1- 6)	4.8± 2.7(2- 11)	6.2± 3.4(3- 13)	14.6± 4.2(4-21)	126.2± 87.8(13-271)	5.0
Pectinophora gossypiella	E	31.5±13.2(16-57)	51.4±11.0(28-63)					.3
	L4				1.5± 1.0(0- 4)	3.1± 2.0(1- 7)	3.4± 2.4(1- 7)	[4]21.0
Lygus	N1	7.9± 3.0(3-15)	9.5± 4.3(4-21)					1.0
	N2	4.9± 1.5(3- 8)	5.7± 2.9(2-11)	9.7± 4.6(3- 18)	17.8± 4.6(9- 25)			1.7
	N3			5.6± 2.2(1- 10)	9.3± 3.0(3- 13)	24.4±10.4(15-44)		3.3
	N4				4.8± 1.3(2- 7)	11.6± 6.9(4-26)		6.6
	N5				4.8± 1.5(3- 8)	9.3± 4.3(2-18)	37.9± 20.4(13- 86)	8.0
	Ad				5.0± 2.6(1- 9)	9.2± 3.0(4-15)	17.6± 9.8(4- 30)	8.0
Aphis gossypii	Ad	14.3± 8.2(8-36)	16.4± 5.1(9-24)	26.9± 9.9(8- 42)				.6

[1]Mean ± S.D. range in parentheses.
[2]E, egg; N, nymph; L, larva; Ad, Adult. Arabic numeral denotes instar.
[3]No nymphs survived throughout the 1st instar.
[4]Due to the variability of the number of insects consumed, these point values are questionable.

Table 3.—*Prey preferences of predators in paired food tests*

Prey 1[1]		Prey 2[1]		No. of tests preference demonstrated[2]			Consumption[3]	
Species	Stage	Species	Stage	Prey 1	Prey 2	Ties	Prey 1	Prey 2
				Sinea confusa				
				1st Nymphal Instar				
CEW	L1	CL	L1	6	7	10	84(143)	86(103)
CEW	L1	CLP	L5	8	4	6	22(37)	16(61)
CEW	L1	LYG	N1	5	9	15	39(66)	42(42)
CL	L1	CLP	L5	8	10	2	24(29)	28(106)
CL	L1	LYG	N1	11	1	7	44(53)	29(29)
CLP	L4	CLP	L5	9	3	0	24(24)	8(30)
CLP	L5	LYG	N1	2	10	2	13(49)	25(25)
LYG	N1	LYG	N3	5	7	7	28(28)	31(93)
LYG	N1	LYG	N4	11	1	5	29(29)	13(64)
LYG	N1	CA	A	9	5	2	32(32)	20(14)
				2nd Nymphal Instar				
CEW	L2	CEW	L3	13	0	0	23(67)	1(5)
CEW	L2	CL	L2	4	12	3	11(32)	23(58)
CEW	L2	CLP	L5	3	10	2	13(38)	32(122)
CEW	L2	LYG	N3	3	13	7	18(52)	39(117)
CL	L2	CL	L3	10	3	2	14(35)	7(23)
CL	L2	CLP	L5	7	4	3	20(50)	15(57)
CL	L2	LYG	N3	8	4	5	35(88)	29(87)
CLP	L4	CLP	L5	8	5	3	40(40)	33(125)
CLP	L5	LYG	N3	10	2	5	33(125)	19(57)
LYG	N2	LYG	N4	10	2	7	31(56)	19(93)
LYG	N3	LYG	N5	11	1	6	26(78)	8(73)
LYG	N3	CA	A	4	9	3	46(138)	51(36)
				3d Nymphal Instar				
CEW	E	CL	E	0	11	14	5(*)	18(18)
CEW	L2	CEW	L3	13	2	5	28(81)	9(45)
CEW	L2	CL	L2	7	8	3	17(49)	24(60)
CEW	L2	CLP	L5	4	8	0	19(55)	29(110)
CEW	L2	LYG	N3	8	4	14	45(130)	43(129)
CL	L2	CL	L4	12	1	1	20(50)	4(58)
CL	L2	CLP	L5	7	13	6	34(85)	40(152)
CL	L2	PBW	E	18	0	0	51(128)	0(*)
CL	L2	LYG	N3	8	7	5	34(85)	31(93)
CLP	L4	CLP	L5	9	5	19	109(109)	99(376)
CLP	L5	LYG	N3	9	8	9	47(179)	39(117)
LYG	N1	LYG	N3	8	6	9	46(46)	40(120)
LYG	N2	LYG	N4	7	6	4	42(76)	40(196)
LYG	N3	LYG	N5	8	5	0	23(69)	17(155)
LYG	N2	CA	A	11	1	2	48(86)	29(17)
				4th Nymphal Instar				
CEW	E	CL	E	2	9	14	5(*)	19(19)
CEW	L2	CEW	L3	10	3	0	27(78)	13(65)
CEW	L2	CL	L2	7	5	4	30(87)	27(68)
CEW	L2	CLP	L5	5	7	3	39(113)	46(175)
CEW	L2	LYG	N3	8	10	11	64(186)	69(207)
CL	L1	CL	L3	12	2	0	35(42)	16(53)
CL	L2	CL	L4	13	0	3	38(95)	13(13)
CL	L2	CLP	L5	5	8	14	88(220)	96(365)
CL	L2	LYG	N3	13	0	1	34(85)	11(33)

See footnotes at end of table.

Table 3.—*Prey preferences of predators in paired food tests*—Continued

Prey 1[1]		Prey 2[1]		No. of tests preference demonstrated[2]			Consumption[3]	
Species	Stage	Species	Stage	Prey 1	Prey 2	Ties	Prey 1	Prey 2
				Sinea confusa—Continued				
				4th Nymphal Instar—Continued				
CLP	L4	CLP	L5	9	3	9	83(83)	75(285)
CLP	L5	LYG	N3	11	2	11	70(266)	56(168)
LYG	N1	LYG	N3	2	11	9	46(46)	65(195)
LYG	N2	LYG	N4	2	10	6	30(54)	39(191)
LYG	N3	LYG	N5	6	8	10	35(105)	35(319)
				5th Nymphal Instar				
CEW	L1	CEW	L3	12	0	2	59(100)	32(160)
CEW	L2	CEW	L4	14	0	0	53(154)	12(89)
CEW	L2	CL	L2	2	11	9	55(160)	77(193)
CEW	L2	CLP	L5	8	4	6	71(206)	65(247)
CEW	L3	CL	L2	0	14	3	31(155)	62(155)
CEW	L3	LYG	N4	6	6	4	44(220)	45(221)
CL	L1	CL	L3	11	2	6	64(77)	49(162)
CL	L2	CL	L4	10	2	5	23(58)	8(116)
CL	L2	CLP	L5	6	7	13	114(285	121(460)
CL	L3	LYG	N4	7	9	11	72(238)	75(368)
CLP	L4	CLP	L5	8	4	8	120(120)	114(433)
CLP	L5	LYG	N4	8	4	1	88(334)	81(396)
LYG	N1	LYG	N3	1	12	7	69(69)	89(267)
LYG	N2	LYG	N4	1	11	6	62(112)	84(412)
LYG	N3	LYG	N5	8	5	5	47(141)	43(391)
				Adults				
CEW	L1	CEW	L3	12	9	4	58(99)	52(260)
CEW	L2	CEW	L4	16	0	3	56(162)	17(126)
CEW	L2	CL	L2	4	8	4	30(87)	41(103)
CEW	L2	CLP	L5	14	0	11	116(336)	81(308)
CEW	L2	LYG	N3	13	1	7	69(200)	41(123)
CEW	L1	CA	A	23	0	1	184(313)	91(64)
CL	L1	CL	L3	12	0	11	88(106)	72(238)
CL	L1	CA	A	9	4	6	119(143)	106(74)
CL	L2	CL	L4	11	2	9	50(125)	37(37)
CL	L2	CLP	L5	4	2	19	106(265)	99(376)
CL	L2	LYG	N3	13	1	13	102(255)	81(243)
CLP	L4	CLP	L5	5	7	3	74(74)	74(281)
CLP	L5	LYG	N3	6	6	10	69(262)	68(204)
LYG	N1	LYG	N3	1	11	4	40(40)	70(210)
LYG	N2	LYG	N4	0	13	9	19(34)	36(176)
LYG	N3	LYG	N5	2	12	6	29(87)	40(364)
				Zelus renardii				
				1st Nymphal Instar				
CEW	L1	CL	L1	11	4	8	47(56)	37(44)
CEW	L1	LYG	N1	14	8	7	63(76)	52(52)
CEW	L1	CEW	L2	13	0	2	33(40)	10(22)
CEW	L2	CLP	L5	0	15	2	1(2)	21(95)
CL	L1	LYG	N1	17	6	5	63(76)	46(46)
CL	L1	CL	L2	11	1	5	29(35)	7(16)
CL	L1	CLP	L4	7	7	9	56(67)	54(59)
CL	L2	CLP	L5	6	7	2	8(18)	9(41)
CLP	L4	CLP	L5	16	0	11	31(34)	9(41)

See footnotes at end of table.

Table 3.—*Prey preferences of predators in paired food tests*—Continued

Prey 1[1]		Prey 2[1]		No. of tests preference demonstrated[2]			Consumption[3]	
Species	Stage	Species	Stage	Prey 1	Prey 2	Ties	Prey 1	Prey 2
				Zelus renardii—Continued				
				1st Nymphal Instar				
CLP	L5	LYG	N3	6	12	9	18(81)	27(68)
LYG	N1	LYG	N4	9	4	4	16(16)	9(41)
				2d Nymphal Instar				
CEW	L1	CEW	L3	13	0	0	30(36)	0(0)
CEW	L2	CEW	L3	14	0	4	17(37)	0(0)
CEW	L2	CL	L2	5	8	3	9(20)	13(30)
CEW	L2	CLP	L5	3	9	4	14(31)	23(103)
CEW	L2	LYG	N2	3	10	8	17(37)	25(30)
CL	L2	LYG	N3	7	7	6	14(32)	15(38)
CL	L2	CL	L4	24	0	3	28(64)	0(0)
CL	L2	CLP	L5	6	8	6	22(51)	20(90)
CLP	L4	CLP	L5	11	1	3	26(29)	10(45)
CLP	L5	LYG	N3	7	12	8	36(162)	42(105)
LYG	N2	LYG	N5	12	1	3	21(25)	4(40)
				3d Nymphal Instar				
CEW	L2	CEW	L3	11	2	1	20(44)	4(18)
CEW	L2	CL	L2	7	6	3	17(37)	12(28)
CEW	L2	CLP	L5	9	3	5	36(79)	32(144)
CEW	L2	LYG	N3	1	13	3	32(70)	47(117)
CEW	L3	CL	L3	4	10	8	5(22)	12(71)
CL	L1	CLP	L4	6	6	11	79(95)	82(90)
CL	L1	CA	A	13	0	1	54(65)	13(8)
CL	L2	CL	L4	14	1	1	17(39)	2(25)
CL	L2	CLP	L5	8	15	5	23(53)	36(162)
CL	L2	LYG	N3	7	6	6	28(64)	26(65)
CLP	L4	CLP	L5	9	4	11	89(98)	69(310)
CLP	L5	LYG	N3	7	4	9	45(202)	41(102)
LYG	N1	LYG	N4	9	4	8	39(39)	32(147)
LYG	N2	LYG	N5	9	5	11	36(43)	30(243)
				4th Nymphal Instar				
CEW	L2	CEW	L3	10	2	1	24(52)	8(35)
CEW	L2	CL	L2	4	11	10	31(68)	36(90)
CEW	L2	CLP	L5	7	6	8	66(145)	61(275)
CEW	L2	LYG	N3	4	8	2	25(55)	37(93)
CEW	L3	LYG	N3	5	7	3	26(114)	30(75)
CL	L2	CL	L4	12	0	4	26(60)	3(38)
CL	L2	CLP	L5	10	3	12	76(175)	68(306)
CL	L2	LYG	N3	4	10	7	27(62)	37(93)
CLP	L4	CLP	L5	5	0	18	109(120)	104(468)
CLP	L5	LYG	N3	8	5	8	102(459)	93(232)
CLP	L4	CA	A	13	0	1	76(84)	37(22)
LYG	N1	LYG	N3	1	12	8	66(66)	86(215)
LYG	N2	LYG	N4	5	5	10	51(61)	47(216)
LYG	N2	LYG	N5	6	6	9	46(55)	44(356)
LYG	N3	LYG	N5	3	11	6	37(93)	47(380)
				5th Nymphal Instar				
CEW	L2	CEW	L3	4	8	3	36(79)	40(176)
CEW	L3	CL	L3	5	11	2	26(114)	33(194)

See footnotes at end of table.

Table 3.—*Prey preferences of predators in paired food tests*—Continued

Prey 1[1]		Prey 2[1]		No. of tests preference demonstrated[2]			Consumption[3]	
Species	Stage	Species	Stage	Prey 1	Prey 2	Ties	Prey 1	Prey 2
			5th Nymphal Instar—Continued					
CEW	L2	CLP	L5	7	6	9	156(343)	155(698)
CEW	L1	LYG	N1	10	4	10	104(125)	91(91)
CEW	L3	LYG	N3	4	10	7	46(202)	55(138)
CL	L2	CL	L4	11	2	1	41(94)	22(275)
CL	L2	CLP	L5	5	9	9	105(241)	109(490)
CL	L2	LYG	N3	4	10	12	83(190)	95(238)
CLP	L4	CLP	L5	9	4	16	229(252)	210(945)
CLP	L5	LYG	N3	4	8	9	86(387)	90(225)
LYG	N1	LYG	N3	4	8	17	148(148)	152(380)
LYG	N2	LYG	N4	4	9	10	79(95)	96(442)
LYG	N3	LYG	N5	3	8	9	52(130)	59(478)
			Adults					
CEW	L2	CEW	L4	7	8	1	32(70)	36(209)
CEW	L2	CLP	L5	8	4	3	102(224)	98(441)
CEW	L3	CL	L3	8	4	1	25(110)	17(100)
CEW	L3	LYG	N4	7	6	3	55(242)	53(244)
CL	L2	CL	L4	18	2	4	63(145)	21(263)
CL	L2	CLP	L5	17	6	14	196(451)	178(801)
CL	L2	LYG	N4	11	6	0	51(117)	45(207)
CLP	L4	CLP	L5	11	1	13	244(268)	224(1008)
CLP	L5	LYG	N3	14	0	4	185(832)	168(420)
LYG	N1	LYG	N3	0	12	11	61(61)	79(198)
LYG	N2	LYG	N4	0	14	3	37(44)	60(276)
LYG	N3	LYG	N5	1	9	13	58(145)	68(550)
			Nabis alternatus					
			1st Nymphal Instar					
CEW	E	CL	E	9	5	1	20(20)	9(9)
CEW	L1	PBW	E	11	5	0	26(55)	14(4)
CEW	L1	CLP	L5	5	10	3	8(17)	12(60)
CEW	L1	LYG	N2	3	10	0	7(15)	25(43)
CL	L1	CL	L3	11	2	1	17(27)	4(14)
CL	L1	PBW	E	12	3	1	22(35)	12(4)
CL	L1	CLP	L5	12	1	3	19(30)	3(15)
CL	L1	LYG	N2	9	5	7	26(42)	20(34)
PBW	E	CLP	L5	9	6	4	17(5)	10(50)
PBW	E	CA	A	4	9	1	31(9)	67(40)
CLP	L4	CLP	L5	13	1	2	24(24)	4(20)
CLP	L5	LYG	N2	2	11	3	6(30)	22(37)
CLP	L5	CA	A	3	11	3	16(80)	27(16)
LYG	N2	LYG	N4	14	0	1	18(31)	1(7)
LYG	N2	CA	A	1	14	0	7(12)	33(20)
			2d Nymphal Instar					
CEW	E	PBW	E	6	6	14	14(14)	21(6)
CEW	L1	CEW	L2	12	0	2	22(46)	4(24)
CEW	L1	CLP	L5	13	0	2	22(46)	4(20)
CEW	E	LYG	N3	4	8	2	9(9)	11(36)
CEW	L1	LYG	N3	7	5	8	25(53)	22(73)
CEW	L2	LYG	N3	1	11	2	3(18)	13(43)
CEW	E	CA	A	0	12	2	4(4)	26(16)
CL	L1	CL	L2	12	0	7	20(32)	7(22)
CL	L1	CL	L3	14	0	3	24(38)	4(14)

See footnotes at end of table.

Table 3.—*Prey preferences of predators in paired food tests*—Continued

Prey 1[1]		Prey 2[1]		No. of tests preference demonstrated[2]			Consumption[3]	
Species	Stage	Species	Stage	Prey 1	Prey 2	Ties	Prey 1	Prey 2
				2nd Nymphal Instar—Continued				
CL	L1	CLP	L5	13	1	4	19(30)	4(20)
CL	E	LYG	N3	3	11	13	9(9)	19(63)
CL	L1	LYG	N3	13	2	1	23(37)	10(33)
CL	L2	LYG	N3	5	8	8	14(45)	17(56)
CL	E	CA	A	0	12	2	5(5)	27(16)
PBW	E	LYG	N3	0	12	0	0(0)	17(56)
CLP	L4	CLP	L5	9	3	4	15(15)	8(40)
CLP	L5	LYG	N3	6	9	4	13(65)	20(66)
LYG	N1	LYG	N3	6	6	5	19(19)	19(63)
LYG	N2	LYG	N4	13	0	9	24(41)	5(33)
LYG	N3	LYG	N5	12	2	4	19(63)	3(24)
LYG	N3	CA	A	0	13	1	4(13)	25(15)
				3d Nymphal Instar				
CEW	E	CEW	L1	0	14	2	12(12)	63(132)
CEW	E	CEW	L2	8	5	3	40(40)	26(83)
CEW	L1	CL	L2	13	1	2	49(103)	20(64)
CEW	L1	PBW	E	15	1	0	49(103)	7(2)
CEW	L1	CLP	L5	13	0	4	37(78)	14(70)
CEW	L1	LYG	N3	11	2	8	48(101)	31(102)
CEW	L1	CA	A	3	11	2	48(101)	62(37)
CL	E	CL	L2	0	15	0	1(1)	37(118)
CL	L1	CL	L2	14	0	2	51(82)	21(67)
CL	L2	PBW	E	14	0	0	38(122)	0(0)
CL	L2	CLP	L5	9	3	2	23(74)	12(60)
CL	L2	LYG	N3	13	1	5	35(112)	15(50)
PBW	E	CLP	L5	0	13	2	3(1)	23(115)
PBW	E	LYG	N3	4	11	1	16(5)	32(106)
CLP	L4	CLP	L5	14	1	1	40(40)	14(70)
CLP	L5	LYG	N3	13	3	5	39(195)	21(69)
LYG	N1	LYG	N3	11	1	4	44(44)	27(89)
LYG	N2	LYG	N4	11	3	1	29(49)	14(92)
LYG	N3	LYG	N5	14	0	1	27(89)	0(0)
LYG	N3	CA	A	0	15	1	9(30)	53(32)
				4th Nymphal Instar				
CEW	E	CEW	L1	0	14	2	16(16)	76(160)
CEW	E	CA	A	2	10	4	37(37)	81(49)
CEW	L1	CEW	L2	15	0	1	61(128)	28(168)
CEW	L1	CL	L3	16	0	1	63(132)	15(51)
CEW	L1	PBW	E	15	1	0	73(153)	12(4)
CEW	L1	CLP	L4	11	6	8	94(197)	85(85)
CEW	L1	LYG	N3	11	1	4	56(56)	40(132)
CL	E	CL	L1	0	16	0	8(8)	68(109)
CL	L1	CL	L3	15	0	1	48(77)	11(35)
CA	L2	CL	L4	16	0	0	39(125)	2(*)
CL	L2	PBW	E	14	1	0	45(144)	6(2)
CL	L3	CLP	L4	0	14	1	12(41)	51(51)
CL	L3	LYG	N3	8	4	5	24(82)	16(53)
PBW	E	LYG	N3	3	12	1	16(5)	49(162)
CLP	L4	CLP	L5	11	1	4	55(55)	43(215)
CLP	L4	LYG	N3	12	0	4	51(51)	26(86)
LYG	N1	LYG	N3	5	10	8	64(64)	65(215)

See footnotes at end of table.

Table 3.—*Prey preferences of predators in paired food tests*—Continued

Prey 1[1]		Prey 2[1]		No. of tests preference demonstrated[2]			Consumption[3]	
Species	Stage	Species	Stage	Prey 1	Prey 2	Ties	Prey 1	Prey 2
				4th Nymphal Instar—Continued				
LYG	N2	LYG	N4	11	5	4	33(56)	18(119)
LYG	N3	LYG	N5	12	1	2	26(86)	6(48)
LYG	N3	CA	A	3	13	3	31(102)	55(33)
				5th Nymphal Instar				
CEW	L1	CEW	L2	12	1	9	92(193)	75(450)
CEW	L1	CEW	L3	13	2	6	63(132)	44(414)
CEW	L1	CL	L2	11	2	12	83(174)	69(221)
CEW	L1	PBW	E	16	0	0	102(214)	0(0)
CEW	L1	CLP	L5	13	1	2	89(187)	56(280)
CEW	L1	LYG	N3	16	0	9	108(227)	80(264)
CEW	L1	CA	A	5	9	4	69(145)	78(47)
CL	L1	CL	L2	11	4	7	87(139)	77(246)
CL	L1	PBW	E	13	0	3	105(168)	27(8)
CL	L1	CA	A	8	6	3	68(109)	61(37)
CL	L2	CL	L3	7	1	17	41(131)	30(102)
CL	L2	CLP	L5	4	10	8	53(170)	63(315)
CL	L2	LYG	N3	12	2	4	49(157	30(99)
CLP	L5	LYG	N3	13	2	4	59(295)	36(116)
LYG	N1	LYG	N3	7	6	9	60(60)	61(201)
LYG	N2	LYG	N4	5	5	14	25(43)	22(145)
LYG	N3	LYG	N5	10	3	5	31(102)	19(152)
LYG	N3	CA	A	3	11	5	41(135)	60(36)
				Adults				
CEW	L2	CEW	L3	11	1	1	30(180)	13(122)
CEW	L2	CL	L2	4	9	4	25(150)	37(118)
CEW	L2	CLP	L5	9	5	2	42(252)	29(145)
CEW	L2	LYG	N3	8	4	10	67(402)	62(205)
CEW	L2	CA	A	3	10	3	39(234)	50(30)
CL	L2	CL	L3	15	7	7	45(144)	26(88)
CL	L2	CLP	L5	13	6	5	42(134)	35(175)
CL	L2	LYG	N3	7	5	10	59(189)	55(182)
CL	L2	CA	A	8	6	0	56(90)	51(31)
CLP	L4	CLP	L5	8	4	12	105(105)	90(450)
CLP	L5	LYG	N3	0	16	3	33(165)	56(185)
LYG	N1	LYG	N3	5	7	6	68(68)	72(238)
LYG	N2	LYG	N4	7	5	4	37(63)	35(231)
LYG	N3	LYG	N5	4	8	8	29(96)	33(264)
LYG	N2	CA	A	3	12	6	62(105)	72(43)
				Collops vittatus				
				Adults				
CEW	E	CEW	L1	8	6	2	32(29)	34(88)
CEW	L1	CEW	L2	3	6	16	71(185)	74(488)
CEW	L1	CEW	L3	11	1	4	59(153)	37(481)
CEW	E	CL	E	7	7	3	260(234)	259(259)
CEW	L1	CL	L1	8	6	8	81(211)	78(172)
CEW	L2	CL	L2	10	4	12	61(397)	49(319)
CEW	L3	CL	L3	7	7	4	21([4])	22(286)
CEW	L3	CL	L4	11	5	5	25([4])	13([4])
CEW	L1	CLP	L4	8	5	0	39(101)	37(59)
CEW	L1	CLP	L5	9	2	3	46(120)	29(189)

See footnotes at end of table.

Table 3.—*Prey preferences of predators in paired food tests*—Continued

Prey 1[1]		Prey 2[1]		No. of tests preference demonstrated[2]			Consumption[3]	
Species	Stage	Species	Stage	Prey 1	Prey 2	Ties	Prey 1	Prey 2
				Collops vittatus—Continued				
CEW	E	PBW	E	13	3	8	70(63)	51(20)
CEW	L1	CA	A	3	7	16	90(234)	94(66)
CEW	L1	LYG	N1	12	0	2	45(117)	13([4])
CL	L1	CLP	L4	9	3	10	73(161)	61(98)
CL	L1	CLP	L5	12	1	1	45(99)	21(137)
CL	E	PBW	E	13	3	9	71(71)	54(22)
CL	L1	CA	A	3	3	19	95(209)	93(65)
CL	L1	LYG	N1	13	0	1	52(114)	8([5])
CLP	L4	LYG	N1	18	1	5	82(131)	31([5])
LYG	N1	LYG	N2	5	7	10	14([5])	20([5])
LYG	N2	LYG	N3	7	8	20	18([5])	20([5])
				Hippodamia convergens				
				Adults				
CEW	E	CEW	L2	10	4	6	161(177)	141(705)
CEW	E	CL	E	5	6	10	322(354)	321(321)
CEW	E	LYG	N3	12	0	1	43(47)	8([4])
CEW	L1	CEW	L2	11	3	4	79(87)	62(310)
CEW	L2	CL	E	2	15	6	175(975)	220(220)
CEW	L2	CL	L2	0	22	8	27(135)	55(220)
CEW	L2	PBW	E	9	4	11	202(1010)	147(59)
CEW	L2	CLP	L5	13	2	8	74(370)	46(593)
CEW	L2	LYG	N3	13	0	1	42(210)	7(23)
CL	E	CL	L2	4	16	3	122(122)	192(768)
CL	L2	CL	L3	13	0	5	25(100)	8([4])
CL	L2	PBW	E	15	0	11	276(1104)	164(65)
CL	L2	CLP	L5	5	7	4	31(124)	33(426)
CL	L2	LYG	N3	13	0	0	38(152)	8([4])
PBW	E	LYG	N3	12	3	1	59(24)	22([4])
CLP	L4	CLP	L5	13	0	0	78([4])	39(503)
CLP	L5	LYG	N3	11	0	2	31(400)	17([4])
LYG	N1	LYG	N3	13	4	8	24(110)	14([4])
LYG	N3	LYG	N5	18	3	6	21([4])	8([4])
LYG	N3	CA	A	0	16	2	11([4])	49(83)

[1]Species: CEW=bollworm, *Heliothis zea* (Boddie), CL=cabbage looper, *Trichoplusia ni* (Hübner), PBW=pink bollworm, *Pectinophora gossypiella* (Saunders), CLP=cotton leafperforator, *Bucculatrix thurberiella* Busck, LYG=*Lygus hesperus* Knight, CA=cotton aphid, *Aphis gossypii* Glov.

Stage: E=egg, L=larvae, N=nymph, A=adult. Number designates instar.

[2]Based on numbers eaten. Ties are tests in which equal numbers of prey were eaten.

[3]Number of prey eaten followed by point value consumption derived from point values in tables 2 and 8.

[4]Feeding tests not run with this prey, therefore, no point value is available.

[5]Feedings tests run, but inadequate feeding resulted in no point value (table 4).

Table 4.—*Percentage of prey captured in 24 h by various stages of hemipterous predators tested in arenas held under several light and temperature regimes*

Temperature (°C)	Photoperiod (light:dark) (h)	Arena area (cm²)	Predator stage[1]											
			Sessile prey *(Trichoplusia ni)*						Mobile prey *(Lygus hesperus)*					
			N1	N2	N3	N4	N5	Ad	N1	N2	N3	N4	N5	Ad
			Sinea confusa											
			Flat Arenas											
20	12:12	409	93	100	100	100	100	83	88	79	93	93	92	100
		881	67	86	75	73	64	69	50	69	79	60	50	46
		1367	88	85	83	62	82	71	71	69	55	70	67	28
		2136	75	92	58	93	92	100	69	86	45	60	42	33
		3302	92	79	92	70	86	36	77	46	64	46	62	21
		5160	100	58	64	58	70	58	62	70	67	73	36	81
		7430	100	69	71	62	73	41	75	64	80	50	50	41
25	12:12	409	96	100	92	100	100	100	92	92	92	86	93	100
		881	100	100	100	85	62	80	92	67	85	100	77	50
		1367	100	100	100	92	100	82	100	69	83	85	64	40
		2136	100	67	100	93	92	92	57	75	92	64	80	46
		3302	85	90	100	67	100	90	83	58	50	64	70	63
		5160	92	90	83	91	50	60	62	60	50	50	60	50
		7430	86	73	90	82	70	70	92	55	45	70	73	40
25	14:10	409	100	100	93	100	100	93	82	93	85	79	100	100
		881	100	77	100	70	92	80	93	85	100	82	55	73
		1367	92	92	100	80	77	77	60	91	58	91	55	60
		2136	83	100	84	75	100	79	85	91	82	75	70	91
		3302	93	60	100	80	85	90	50	64	100	82	80	50
		5160	67	80	70	100	90	60	54	80	62	70	60	55
		7430	85	83	100	77	70	64	36	54	100	82	40	80
30	12:12	409	100	100	92	100	100	100	100	93	93	92	86	100
		881	100	100	100	100	93	85	100	100	92	64	77	85
		1367	93	100	85	92	77	100	77	85	100	92	92	90
		2136	92	100	100	92	100	92	85	92	85	83	62	91
		3302	100	93	90	81	92	100	83	73	80	70	46	73
		5160	83	90	82	92	83	100	42	73	67	60	67	64
		7430	100	91	70	100	80	91	70	70	64	75	30	46
30	14:10	409	100	100	100	93	100	100	79	100	93	86	100	92
		881	100	100	100	100	100	80	77	100	100	92	60	82
		1367	87	100	92	100	100	100	90	100	100	75	75	83
		2136	100	100	100	100	92	92	93	83	100	92	92	90
		3302	89	100	90	90	100	100	93	92	83	70	67	64
		5160	92	90	100	80	91	64	67	82	60	80	67	60
		7430	92	91	100	58	70	82	69	100	77	90	40	80
Composite[2]		409	98	100	95	99	100	94	87	89	91	87	94	99
		881	94	92	95	86	82	79	83	85	90	80	65	67
		1367	92	95	92	85	87	85	88	83	80	83	71	59
		2136		90	89	90	95	90	78	85	81	76	68	69
		3302	92	85	95	77	92	80	77	67	76	65	64	53
		5160	86	81	78	84	77	68	57	73	61	67	58	62
		7430	92	81	85	75	73	70	67	68	73	74	47	57
			Artificial Plants											
	14:10	1118	89	100	80	[3]83	87	—	89	[2]100	[3]83	100	70	—
		3102	88	88	88	63	90	—	80	[2]100	[3]100	(4)	38	—
		5824	88	[2]100	50	[3]83	67	—	(4)	[2]100	[3]100	(4)	67	—
		11325	67	[2]100	[3]33	[4]40	[5]67	—	(4)	[2]100	[3]50	(4)	[5]80	—

See footnotes at end of table.

Table 4.—*Percentage of prey captured in 24 h by various stages of hemipterous predators tested in arenas held under several light and temperature regimes*—Continued

Temperature (°C)	Photoperiod (light:dark) (h)	Arena area (cm²)	Predator stage[1]											
			Sessile prey *(Trichoplusia ni)*						Mobile prey *(Lygus hesperus)*					
			N1	N2	N3	N4	N5	Ad	N1	N2	N3	N4	N5	Ad
			Zelus renardii											
			Flat Arenas											
20	12:12	409	100	77	83	93	79	100	69	57	57	92	92	100
		881	82	58	82	70	67	54	64	39	69	100	73	100
		1367	64	57	100	83	85	80	86	54	75	92	80	46
		2136	83	85	79	91	70	60	62	69	92	100	80	73
		3302	77	75	100	64	77	80	54	25	73	40	33	64
		5160	55	58	82	50	73	40	50	60	30	55	50	60
		7430	70	70	50	100	90	55	46	40	62	91	40	80
25	12:12	409	94	86	69	94	80	80	92	93	100	100	92	92
		881	85	100	62	100	100	91	93	83	86	100	83	93
		1367	50	100	92	100	100	67	64	56	77	85	69	93
		2136	85	92	75	91	86	92	92	50	83	77	60	86
		3302	92	100	58	92	75	90	64	100	55	75	60	40
		5160	85	91	93	83	80	67	79	60	75	70	30	50
		7430	100	80	100	70	55	80	67	64	70	100	55	73
25	14:10	409	100	93	69	86	100	93	50	57	79	90	100	85
		881	85	88	100	75	64	100	54	71	75	73	45	67
		1367	81	100	83	73	75	100	86	54	86	60	93	86
		2136	92	69	70	82	85	73	58	64	70	50	100	31
		3302	64	71	80	80	90	100	75	57	64	92	64	90
		5160	67	79	91	73	69	73	54	58	73	73	60	40
		7430	86	79	90	100	79	79	54	70	64	55	60	60
30	12:12	409	100	100	92	92	92	100	93	92	92	100	100	100
		881	85	100	100	69	100	92	86	77	83	83	92	92
		1367	92	93	83	92	100	92	92	64	91	40	67	92
		2136	86	86	86	92	62	83	92	92	77	92	80	92
		3302	100	80	93	100	100	90	92	50	70	70	70	69
		5160	92	82	70	91	73	70	92	80	54	70	82	30
		7430	70	100	82	90	69	83	55	80	70	55	70	50
30	14:10	409	100	86	93	83	92	100	100	100	100	100	77	92
		881	100	83	75	92	92	100	69	92	92	100	100	93
		1367	79	100	75	67	100	100	83	83	92	85	100	100
		2136	92	100	100	92	100	75	100	86	100	91	93	100
		3302	92	92	85	100	80	73	92	83	70	82	40	60
		5160	100	92	100	80	82	50	50	60	82	70	70	60
		7430	100	100	91	82	80	64	67	50	73	50	82	60
Composite[2]		409	99	88	82	90	88	95	81	76	85	96	92	94
		881	87	86	84	83	85	86	74	72	81	92	76	88
		1367	74	91	87	84	91	88	82	60	84	74	83	85
		2136	87	87	80	89	81	77	81	66	85	82	80	76
		3302	85	83	83	88	84	87	75	61	66	70	53	65
		5160	81	80	88	75	75	60	66	63	65	69	59	48
		7430	87	86	83	86	74	72	58	61	67	70	62	53

See footnotes at end of table.

Table 4.—*Percentage of prey captured in 24 h by various stages of hemipterous predators tested in arenas held under several light and temperature regimes* —Continued

Temperature (°C)	Photoperiod (light:dark) (h)	Arena area (cm²)	Predator stage[1]											
			Sessile prey *(Trichoplusia ni)*						Mobile prey *(Lygus hesperus)*					
			N1	N2	N3	N4	N5	Ad	N1	N2	N3	N4	N5	Ad
			Artificial Plants											
	14:10	1118	78	88	85	88	100	—	[3]86	82	100	70	67	—
		3102	75	73	[3]100	88	80	—	[3]50	80	[3]80	75	63	—
		5824	62	89	[3]100	88	75	—	88	89	100	50	60	—
		11325	[3]67	(*)	[3]100	63	100	—	(*)	[3]100	[3]100	89	50	—
			Nabis alternatus											
			Flat Arenas											
20	12:12	409	83	86	67	100	92	93	73	67	69	100	92	83
		881	82	100	67	100	55	60	54	53	82	50	80	91
		1367	83	83	75	100	83	90	83	73	87	73	70	64
		2136	82	70	40	82	92	82	45	50	80	68	100	30
		3302	73	55	70	60	58	91	70	60	70	82	42	50
		5160	75	82	70	73	90	33	45	30	42	70	83	70
		7430	75	60	77	90	91	75	65	45	30	58	67	67
25	12:12	409	92	100	75	100	92	53	75	70	100	92	90	57
		881	70	75	100	83	83	55	50	73	70	80	100	80
		1367	90	83	64	100	91	75	90	60	83	100	92	58
		2136	100	73	82	90	100	60	67	73	64	73	75	36
		3302	91	100	100	100	92	92	70	80	90	92	75	75
		5160	83	83	91	80	83	82	67	64	90	100	80	75
		7430	91	100	80	90	91	58	36	70	83	90	91	82
25	14:10	409	92	67	92	100	100	75	69	100	100	93	91	100
		881	92	82	80	100	100	45	75	100	82	73	100	82
		1367	60	91	70	91	100	50	82	70	82	91	90	90
		2136	100	62	100	91	92	73	83	57	91	91	75	64
		3302	91	92	92	83	92	73	83	83	91	83	92	100
		5160	82	90	100	92	92	90	55	70	60	100	100	70
		7430	91	82	82	90	92	75	75	83	90	82	50	73
30	12:12	409	83	92	90	100	100	100	91	83	80	100	92	94
		881	67	82	83	100	100	70	100	100	91	100	91	100
		1367	92	100	100	100	100	73	83	90	92	90	100	90
		2136	91	91	100	100	100	80	100	73	70	100	100	100
		3302	90	82	100	91	100	67	91	82	100	100	73	92
		5160	73	92	82	82	100	64	83	91	83	93	80	90
		7430	82	80	73	90	91	64	82	82	100	100	91	83
30	14:10	409	80	100	83	100	100	54	100	100	100	100	100	64
		881	92	83	91	91	92	82	67	90	91	100	83	83
		1367	100	92	100	90	100	83	83	73	83	100	100	27
		2136	82	100	100	100	92	100	100	80	73	100	73	100
		3302	91	100	100	100	83	100	92	80	70	100	92	80
		5160	100	90	100	82	90	90	58	90	91	91	82	83
		7430	91	91	100	100	91	83	73	70	90	90	90	80

See footnotes at end of table.

Table 4.—*Percentage of prey captured in 24 h by various stages of hemipterous predators tested in arenas held under several light and temperature regimes*—Continued

Temperature (°C)	Photoperiod (light:dark) (h)	Arena area (cm²)	Predator stage[1]											
			Sessile prey *(Trichoplusia ni)*						Mobile prey *(Lygus hesperus)*					
			N1	N2	N3	N4	N5	Ad	N1	N2	N3	N4	N5	Ad
			Flat Arenas—Continued											
Composite[2]		409	86	87	81	100	97	74	81	84	87	96	93	71
		881	81	84	84	93	86	62	68	81	83	80	91	87
		1367	86	90	82	96	95	75	84	73	85	91	91	65
		2136	91	78	84	93	95	80	80	66	75	86	84	68
		3302	87	86	93	87	85	84	82	77	85	91	75	79
		5160	83	87	89	82	91	70	62	69	73	92	85	78
		7430	86	83	84	92	91	71	66	70	79	84	77	77

[1]N, nymph; Ad, adult. Arabic numeral denotes instar.
[2]Combined data from all temperature-light regimes.
[3]Less than 8 successful tests.
[4]No data.

Table 5.—*Mean numbers of predators responding each hour through holes of various sizes to coddled beet armyworm or pink bollworm egg prey*

Hole size (mm)	Mean number per hour responding over 6- to 8-h period for:						Hole size (mm)	Mean number per hour responding over 6- to 8-h period for:					
	N1[1]	N2[1]	N3[1]	N4[1]	N5[1]	Adult		N1[1]	N2[1]	N3[1]	N4[1]	N5[1]	Adult
	Sinea confusa							*Nabis alternatus*					
1	0	0					1	0	<.1	0	0	0	0
2	0	.12	0	0			2	2.1	1.3	.7	.4	.3	.4
3	.2	.12	.66	1.17	0		3					1.3	2.2
4	.7	.78	1.49	.97	.49			*Collops vittatus*					
5	.6	1.37			1.00	0	2						0
6	1.5				.71	1.00	3						1.9
7						1.89	4						1.1
	Zelus renardii							*Hippodamia convergens*					
1	0	0					2						0
2	0	.17	0	0			3						0
3	.23	.30	.16	.20			4						1.1
4	.35	.80	.10	.31	0	0	5						1.0
5	[2]	[2]	.67	[2]	1.05	.23	6						.9
6	[2]	[2]	2.67	[2]	2.86	.89							

[1]N, nymph. Arabic numeral denotes instar.
[2]No data.

Table 6.—*Spaces within the bracts of squares and bolls of Deltapine-16 Upland cotton*

Diameter of fruit (mm) E	Mode and range (in parentheses of spaces for the following measurements (see fig. 2)— A		B		C		D		F		G		H		I	
	Millimeters															
Squares:																
3- 6	11	(5-11)	7	(4- 8)	4	(3- 6)	2	(1-2)	4	(3-6)	2	(1-2)	4	(3- 6)	1	(0-3)
7- 9	14	(7-15)	8	(7-12)	7	(4-10)	2	(1-3)	7	(4-7)	2	(2-3)	7	(6-10)	2	[2]
10-13	10	(3-21)	13	(2-15)	9	(8-20)	2	(1-3)	8	(5-8)	3	(2-5)	8	(6-10)	3	[2]
Bolls:																
12-15	7	(0-12)	5	(0- 7)	11	(10-13)	3	(3-4)			3	(3-4)	8	(8-12)	3	[2]
16-18	[1]0	(0-14)	[1]0	(0-12)	15	(12-18)	2	(0-3)			2	(2-3)	8	(7-10)	3	[2]
19-21	[1]0		[1]0		14	(14-16)	0	(0-3)			2	(1-2)	[3]8			[2]
22-24	[1]0		[1]0		18	(15-21)	0	(0-3)			1	(1-3)	[3]8			[2]
25-27	[1]0		[1]0		21	(18-27)	0	(0-3)			1	(1-3)	[3]8			[2]
28-30	[1]0		[1]0		20	(20-27)	0	(0-4)			2	(0-3)	[3]8			[2]
31-33	[1]0		[1]0		24	(20-27)	0	(0-3)			2	(1-2)	[3]8			[2]
34-36	[1]0		[1]0		27	(21-30)	0	(0-3)			2	(2-3)	[3]8			[2]

[1]This site disappears when the tip of the boll breaks through the tip of the bracts.

[2]When squares or bolls are small, the lobes of the bract may be pressed closely together, but as the fruit mature the space becomes open and is penetrable by most insects.

[3]Once the bracts are full grown, the lobe diameter stabilizes at 7 to 10 mm.

Table 7.—*Prey acceptance by* Collops vittatus *and* Hippodamia convergens *adults in close confines*

Prey	Stage[1]	Percentage of prey eaten by adult		Prey	Stage[1]	Percentage of prey eaten by adult	
		C. vittatus	*H. convergens*			*C. vittatus*	*H. convergens*
Lygus hesperus	N1	42	55	*Heliothis zea*	L3	40	30
	N2	9	31	—Continued	L4	0	0
	N3	21	63				
	N4	0	6	*Trichoplusia ni*	E	70	82
	N5	0	33		L1	100	75
	Ad	—	0		L2	83	100
					L3	100	25
Aphis gossypii	Ad	97	98		L4	20	—
Acyrthosiphum pisum	Ad	100		*Pectinophora gossypiella*	E	78	100
Heliothis zea	E	20	88	*Bucculatrix thurberiella*	L4	86	94
	L1	100	86		L5	100	100
	L2	30	70				

[1]E, egg; N, nymph; L, larva; Ad, adult. Arabic numeral denotes instar.

Table 8.—*Longevity and prey consumption of adult* Collops vittatus *and* Hippodamia convergens

Prey		*Collops vittatus*				*Hippodamia convergens*			
Species	Stage[1]	Longevity (days)	No. of prey consumed— Mean ±S.D.[2]	Daily	Point value (PV)	Longevity (days)	No. of prey consumed— Mean ±S.D.[2]	Daily	Point value (PV)
Trichoplusia ni	E	86.6±40.0	[3]1.1±0.7(0.2- 2.9)	13	1	85.1±57.5	[3]6.5±4.9(0.7-17.0)	76	1
	L1	58.3±24.3	337±187(92- 710)	6	2.2	14.4± 8.9	815±573(113-1897)	57	1.3
	L2	55.9±28.6	105± 62(26- 238)	2	6.5	35.6±18.8	674±399(155-1267)	19	4.0
	L3	43.3±24.8	48± 32(8- 111)	1	13.0				
	L4	46.8±35.3	28± 23(1- 89)	<1	0				
Heliothis zea	E	136.6±52.4	[3]2.0±1.1(0.9- 3.7)	15	0.9	53.1±39.7	[3]4.4±3.9(0.2-13.0)	82	1.1
	L1	87.3±42.0	440±211(96- 967)	5	2.6	22.6±15.5	538±431(35-1823)	24	3.2
	L2	69.6±50.4	141±112(5- 368)	2	6.5	7.9± 2.8	119± 82(21- 362)	15	[4]5.0
	L3	81.5±25.6	53± 28(14- 109)	<1	0				
Bucculatrix thurberiella	L4	27.9±21.5	210±130(10- 436)	8	1.6				
	L5	57.5±30.0	99± 55(24- 207)	2	6.5	10.1±11.4	60±127(11- 579)	6	[4]12.9
Pectinophora gossypiella	E	103.7±52.2	[3]3.6±2.4(.02- 8.8)	35	.4	52.2±21.4	[3]9.8±6.8(0.4-24.4)	187	.4
Lygus	N1	27.5±15.0	22± 16(3- 49)	<1	0	18.5±13.3	307±417(14-1559)	17	[4]4.6
	N2	23.8±22.2	17± 20(1- 76)	<1	0	15.3±13.8	130±211(8- 930)	9	[4]8.9
	N3	25.7±20.2	15± 15(2- 52)	<1	0				
Aphis gossypii	*Ad*	48.8±31.9	990±448(202-1808)	20	0.7	44.9±24.8	[3]2.0±1.2(0.9- 4.7)	45	1.7

[1]E, egg; N, nymph; L, larva; Ad, adult. Arabic numeral denotes instar.
[2]Range in parentheses.
[3]Thousands.

Table 9.—*Percentage of immobile and mobile (in parentheses) prey*[1] *captured in 24 h by* Collops vittatus *and* Hippodamia convergens *adults*

Flat arena area (cm^2)	Percentage of captures at indicated temperature-photoperiod[2] regimes											
	20°C 12:12		25° 12:12		25°C 14:10		30°C 12:12		30°C 14:10		Composite[3]	
					Collops vittatus							
409	39	(21)	64	(21)	46	(8)	86	(80)	54	(18)	58	(29)
881	55	(9)	39	(0)	57	(25)	70	(20)	80	(0)	61	(11)
1367	33		44		68	(27)	71	(10)	92	(0)	63	(19)
2136	36		79		73	(36)	91		69		70	(36)
3302	67		64		82	(54)	83		70		73	(54)
5160	30		67		73	(50)	67		100		67	(60)
7430	10		83		36	(40)	80		64		56	(40)
					Hippodamia convergens							
409	100	(33)	93	(7)	92	(0)	86	(42)	100	(33)	94	(22)
881	70	(17)	70	(10)	92	(31)	100	(8)	73	(27)	82	(19)
1367	83	(18)	92	(17)	83	(8)	91	(10)	100	(10)	90	(12)
2136	80	(9)	95	(40)	69	(18)	83	(42)	91	(0)	85	(22)
3302	92	(10)	90	(27)	82	(20)	100	(20)	90	(10)	91	(17)
5160	30	(0)	64	(30)	100	(27)	89	(20)	100	(46)	75	(25)
7430	50	(0)	70	(9)	73	(20)	80	(30)	90	(9)	73	(13)

[1]Immobile, 2d-instar cabbage loopers; mobile, 1st-instar *Lygus hesperus* for *C. vittatus* and 3d-instar *L. hesperus* for *H. convergens.*
[2]Hours, light: dark.
[3]Combined data from all temperature-light regimes.

Table 10.—*Duration of stages of 3 hemipterous predators reared at 5 temperatures and fed live cabbage looper and beet armyworm larvae*

Temperature °C	Mean duration[1] of stage[2] (days) – Egg[3]	N1	N2	N3	N4	N5	Total N	Adult[4]
				Sinea confusa				
15	[5]	(22)34.1±6.5	(4)38.5±3.3	(1)57.0	[5]	[5]	[5]	[5]
20	(61)240.2± 9.6	(68)11.5±1.1	(60) 8.8±0.9	(52) 8.8±0.9	(38)11.1±1.3	(19)17.2±1.1	(19) 57.0± 2.3	(19) 9.3±10.3
25	(58)126.2± 4.8	(51) 7.9±1.0	(40) 5.6±0.8	(42) 5.4±0.8	(31) 6.9±1.3	(30)10.2±1.5	(30) 36.0± 1.1	(27)23.2±21.9
30	(64) 79.0± 4.1	(86) 4.6±0.9	(69) 2.9±0.4	(51) 3.2±0.9	(32) 3.7±0.6	(11) 5.6±0.5	(11) 20.0± 1.4	(11) 2.5± 2.2
33	(64) 71.6± 6.0	(82) 3.6±0.6	(51) 2.7±0.6	(32) 2.6±0.6	(12) 3.1±0.3	[5]	[5]	[5]
				Zelus renardii				
15	[5]	(42)32.0±8.6	(19)28.7±4.3	(13)26.7±5.7	(7)33.0±5.9	(2)56.5	(2)177.5	(2) 0
20	(160)180.7± 2.4	(61) 9.8±1.6	(46) 8.3±1.2	(43) 8.4±1.3	(31)10.0±1.4	(23)15.3±1.3	(23) 51.6±3.7	(23)16.8±15.7
25	(156)101.0± 3.2	(34) 6.8±1.2	(41) 5.8±0.9	(58) 5.8±1.4	(54) 6.1±0.6	(43) 8.5±0.8	(46) 33.0±1.0	(34)33.2±17.0
30	(163) 62.5± 2.7	(81) 4.1±0.7	(55) 3.3±0.6	(29) 3.6±0.9	(7) 4.6±1.3	(1) 9.0	(1) 26.0	(1) 1.0
33	(214) 57.3± 1.5	(79) 3.5±0.6	(39) 2.6±0.5	(13) 2.7±0.5	(1) 3.0	[5]	[5]	[5]
				Nabis alternatus				
15	(122)374.7±18.8	(53)13.6±3.7	(29)12.3±5.7	(17)12.2±2.9	(11)14.6±2.5	(6)19.3±2.3	(6) 65.7±12.8	(6)34.5±31.1
20	(211)149.0±10.4	(58) 6.0±1.7	(32) 5.8±1.5	(23) 5.3±1.8	(23) 6.2±2.3	(14) 9.7±1.4	(14) 30.1± 4.7	(14)23.7±18.7
25	(194) 91.7± 6.7	(27) 3.6±0.8	(24) 2.8±0.8	(25) 3.1±0.7	(24) 3.5±0.7	(31) 6.1±2.0	(26) 19.1± 1.0	(31)31.8±13.1
30	(225) 64.3± 3.6	(71) 3.0±0.6	(51) 2.8±0.8	(37) 2.5±0.7	(22) 3.0±1.0	(8) 4.0±0.8	(8) 14.9± 1.6	(8) 2.6± 1.8
33	(234) 55.7± 5.6	(64) 2.5±0.6	(42) 2.2±0.6	(31) 2.4±0.9	(21) 2.3±0.8	(5) 3.4±1.3	(5) 12.2± 0.8	(5) 2.4± 1.9

[1]Plus or minus the standard deviation. Number in parentheses preceding the duration is the number of insects in the test.
[2]N, nymph. Arabic number denotes instar. Adult, adult longevity.
[3]Duration in number of 2-h periods.
[4]Longevity.
[5]No survivors.

Table 11.—*Regression data for the transformation of temperatures to reciprocal units of development (RUD)*

Insect	Stage	Intercept[1] (a)	Slope[1] (b)	Literature source[2]
	Pests			
Heliothis zea	Egg	−0.1223	0.1059	(37)
	L-P[3]	− .0119	.0106	(37)
H. virescens	Egg	−.1236	.1072	(37)
	L-P	−.0111	.0099	(37)
Spodoptera exigua	Egg	−.1736	.1449	(37)
	L-P	−.0198	.0173	(37)
Trichoplusia ni	Egg	−.1269	.1104	(37)
	L-P	−.0143	.0132	(37)
Estigmene acrea	Egg	−.0799	.0701	(37)
	L-P	−.0072	.0069	(37)
Pectinophora gossypiella	Egg	−.0766	.0652	(37)
	L-P	(4)	(4)	(37)
Bucculatrix thurberiella	Egg	[5]−.0598	[5].0528	(36)
	L-P	[5]−.0256	[6].0223	(36)
Lygus hesperus	Egg	−.0343	.0314	(9)
	Nymphal	−.0172	.0161	(9)
	Predators			
Zelus renardii	Egg	−.0693	.0573	(4)
	Nymphal	−0101	.0090	(4)
Z. socius	Egg	−.0512	.0456	(7)
	Nymphal	−.0061	.0065	(7)
Sinea confusa	Egg	−.0568	.0467	(4)
	Nymphal	−.0189	.0155	(4)
Nabis alternatus	Egg	−.0509	.0448	(4)
	Nymphal	−.0174	.0157	(4)
Geocoris punctipes	Egg	−.0447	.0378	(11)
	Nymphal	−.0153	.0129	(11)
G. pallens	Egg	−.0772	.0636	(7)
	Nymphal	−.0292	.0235	(7)
Orius tristicolor	Egg	−.0893	.0794	(7)
	Nymphal	−.0145	.0146	(7)
Chrysopa carnea	Egg	−.0736	.0674	(8)
	L-P	−.0197	.0174	(8)

[1]In the linear regression equation $y = a + b$ (log t) where y = estimated RUD.

[2]See Literature Cited, p. 00.

[3]L-P = larval-pupal.

[4]Regression equation is asymptotic: $y = \frac{1}{345 + (234 \times 0.1976^{x})}$

where y = estimated RUD and $x = \frac{\text{log temperature} - 1.30103}{0.0725}$

[5]With data added to the original (36) and correction of the egg RUD intercept, larval-pupal development is considered as linear in relation to log t.

[6]Data developed from information in table 10.

Table 12.—*Duration of stages of 3 hemipterous predators held at 25° C and fed different prey*

Prey		Mean duration of stages[1] in days					
Species	Stage[1]	N1	N2	N3	N4	N5	Adult
				Sinea confusa			
Trichoplusia ni	E	9.4±1.4					
	L1				5.8±0.5		
	L2	7.7±2.4	5.9±1.1	5.3±1.2	6.7±0.8		
	L3			5.8±1.1	7.2±1.7	9.6±1.6	29.0±28.4
	L4					10.7±1.2	17.9±12.4
Heliothis zea	L1	7.0±0.7	5.5±0.8	5.2±0.7			
	L2	8.8±1.2	5.8±1.0	5.5±0.9	6.3±1.4		
	L3				6.5±1.1	9.4±0.6	24.7±31.2
	L4				7.6±1.2	10.8±1.2	37.4±32.4

See footnote at end of table.

Table 12.—*Duration of stages of 3 hempiterous predators held at 25° C and fed different prey*—Continued

Prey		Mean duration of stages[1] in days					
Species	Stage[1]	N1	N2	N3	N4	N5	Adult
Bucculatrix thurberiella	L4	6.3±0.6	5.3±1.3				
	L5		5.7±1.0	5.2±0.8	5.8±0.6	10.0±1.7	103.7±52.2
Pectinophora gossypiella	L4				9.0±1.4		
Lygus	N1	6.3±0.5	5.6±0.7				
	N2	6.3±0.6	5.4±0.8	5.0±0.5			
	N3			5.0±0.6	6.4±0.5		
	N4			5.8±0.9	6.4±0.9	10.8±0.9	11.1± 3.9
	N5				6.0±1.7	10.7±1.4	10.0± 5.3
	Ad					12.5±1.4	12.3±10.6
Aphis gossypii	Ad	10.4±1.7	5.9±2.8	8.3±*1.8*			
				Zelus renardii			
Trichoplusia ni	E	8.5±1.9					
	L1	6.4±1.1	5.7±0.7	5.4±0.6			
	L2	7.2±1.5	5.8±1.1	5.7±2.1	6.0±0.7		
	L3			6.2±1.5	6.2±0.6	8.4±0.6	33.6±16.8
	L4				6.6±1.2	8.7±1.1	32.8±18.5
Heliothis zea	L1	8.3±1.7	6.8±1.8	5.6±0.8			
	L2	8.5±1.2	6.1±0.9	5.8±1.7	6.6±0.6		
	L3			6.2±1.4	6.4±0.9	8.7±1.3	23.2±10.2
	L4					10.4±1.6	24.5±16.6
Bucculatrix thurberiella	L4	6.3±1.9	5.[illegible]±0.9				
	L5		6.[illegible]±1.6	6.0±2.0	6.8±1.2	9.7±1.0	9.4± 4.9
Pectinophora gossypiella	L4				7.3±1.9		
Lygus	N1	6.9±0.3	5.1±0.8				
	N2	6.3±1.3	6.0±0.8	5.7±0.6			
	N3			5.6±1.3	6.0±0.8		
	N4			5.9±0.6	6.5±0.8	8.5±1.0	16.5±10.4
	N5				6.4±0.7	9.7±1.0	10.7± 5.3
	Ad					10.6±0.9	13.3± 3.2
Aphis gossypii	Ad	9.2±0.9	7.5±2.2	10.8±3.5			
				Nabis alternatus			
Trichoplusia ni	E	3.7±0.9	3.2±1.0				
	L1	3.4±0.7	2.7±0.7				
	L2		2.9±0.9	2.9±0.5	3.3±0.6		
	L3			3.3±1.0	3.8±0.9	6.0±2.0	28.4±12.0
Heliothis zea	E	3.6±0.5	2.7±0.5				
	L1	3.8±0.9	3.5±1.1				
	L2		3.9±1.5	3.6±1.2	4.2±0.6		
	L3			3.7±1.4	4.3±1.6	6.2±1.9	36.4±15.0
Bucculatrix thurberiella	L4	3.7±0.7	2.7±1.2				
	L5		2.9±0.8	3.0±1.0	3.3±0.6	5.8±0.5	34.1±21.4
Pectinophora gossypiella	E	4.8±1.0	4.3±0.9				
	L4				4.5±1.2	6.4±1.5	10.0± 5.2
Lygus	N1	3.5±1.0	2.9±0.7				
	N2	3.6±0.5	2.8±0.7	3.5±1.0	3.8±0.6		
	N3			3.3±0.7	3.8±1.0	6.2±0.8	

See footnote at end of table.

Table 12.—*Duration of stages of 3 hempiterous predators held at 25° C and fed different prey*—Continued

Prey		Mean duration of stages[1] in days					
Species	Stage[1]	N1	N2	N3	N4	N5	Adult
Lygus—	N4				3.7±0.8	5.6±0.9	
Continued	N5				4.0±1.0	5.5±1.2	21.5± 8.5
	Ad				5.3±2.0	7.2±1.4	14.3± 8.9
Aphis gossypii	Ad	4.0±1.0	3.1±0.6	3.1±0.8			

[1]E, egg; N, nymph; L, larva; Ad, adult. Arabic numeral denotes instar.

Table 13.—*Daily consumption by* Peromyscus maniculatus *and* P. merriami *with single and paired food choices*

Mouse No.	Daily[1] consumption (g)				Daily[1] consumption (g) to determine preference					
	Sorghum	Mesquite beans	*Heliothis* pupae[2]	Beet armyworm pupae[2]	Sorghum vs. mesquite beans		Sorghum vs. *Heliothis* pupae[2]		Sorghum vs. beet armyworm pupae[2]	
					P. maniculatus					
1	2.4	2.2	2.6	2.4	1.4	1.4	0.8	1.8	0.9	1.7
2	2.7	1.6	2.1	2.3	1.6	.9	.5	2.1	.4	2.1
3	1.8	1.8	1.4	1.1	1.4	.4	.4	1.7	.4	1.7
4	2.9	1.4	2.2	1.8	1.8	.1	.1	2.4	.2	2.3
5	2.8	1.9	2.4	2.3	1.5	.6	<.1	2.1	.1	2.9
Mean	2.5	1.8	2.1	2.0	1.5	.7	.4	2.0	.4	2.1
					P. merriami					
6	2.1	1.8	1.6	1.8	.5	1.8	.5	1.4	.7	1.6

[1]Minimum of 24 daily replicates for each mouse for sorghum, 17 for mesquite beans, 11 for *Heliothis* spp. pupae, 11 for beet armyworm pupae, 20 for sorghum vs. mesquite beans, 8 for *Heliothis* spp. pupae vs. sorghum, and 11 for beet armyworm pupae vs. sorghum.

[2]Dry weight.

Table 14.—*Emergence of moths from pupae exposed to mouse predation for 24 h*

	Peromyscus maniculatus						*P. merriami*					
	Replicates	Emergence[1]		Reduction[2]	Daily consumption		Replicates	Emergence[1]		Reduction[2]	Daily consumption	
		Check	Test		Pupae	Grain		Check	Test		Pupae	Grain
	No.	*Percent*	*Percent*	*No.*	*No.*	*Grams*	*No.*	*Percent*	*Percent*	*No.*	*No.*	*Grams*
					Naturally pupated							
Heliothis spp.	17	77	16	79	15		3	84	73	13	3	
Beet armyworms	15	86	8	91	39		3	91	27	70	32	
Pink bollworms	15	77	10	87	34		3	76	22	71	27	
					Naturally pupated vs. grain							
Heliothis spp.	15	83	31	62	13	1.00	3	88	85	0	0	.95
Pink bollworms	15	79	17	79	31	1.07	3	83	70	15	6	.86
					Simulated cultivation							
Heliothis spp.	15	48	28	42	25		3	68	27	61	10	

[1]Subsequent to a 24-h exposure to predation by mice.

[2]Based on emergence in check.

Table 15.—*Parameters for the determination of the percentage of individuals in a given instar (equations 3, 4a, b)*

Stage	Instar	Parameter[1]	*Heliothis zea*	*Heliothis virescens*	*Spodoptera exigua*	*Trichoplusia ni*	*Estigmene acrea*	*Pectinophora gossypiella*	*Bucculatrix thurberiella*	*Sinea confusa*	*Zelus renardii*	*Nabis alternatus*
Larval (Nymphal)	1	a	-1358	-7.943	-6.430	-7.207	-10.253	-8.531		-4.622	-10.67	-6.990
		b	11931	66.554	37.337	45.032	89.112	42.925		24.68	53.72	28.75
		s.e.[2]	0.0876	0.1055	0.1769	0.1417	0.1146	0.0704		0.1900	0.0524	0.0260
	2	a	-1358	-7.943	-6.430	-7.207	-10.253	-8.531		-4.622	-10.67	-6.990
		b	11931	66.554	37.337	45.032	89.112	42.925		24.68	53.72	28.75
		s.e.[2]	0.0876	0.1055	0.1769	0.1417	0.1146	0.0704		0.1900	0.0524	0.0260
	3	a	-10.460	-12.20	-8.260	-10.237	-12.227	-8.405	-29.622	-23.66	-12.10	-8.51
		b	54.838	64.624	30.313	40.264	62.784	28.668	97.884	70.24	34.08	19.73
		s.e.[2]	0.1079	0.1023	0.1683	0.1613	0.1310	0.1084	0.047	0.2005	0.0782	0.0522
	4	a	-15.078	-14.839	-9.639	-8.599	-12.000	-7.385	-29.622	-20.30	-13.21	-8.28
		b	58.182	58.334	27.371	24.698	43.597	17.201	97.884	42.48	25.43	13.48
		s.e.[2]	0.0951	0.1020	0.1626	0.1960	0.1464	0.1572	0.035	0.2047	0.0763	0.0483
	5	a	-16.365	-16.059	-10.867	-8.591	-12.040		-131.37	-22.76	-22.22	-8.67
		b	47.239	47.898	24.387	18.612	32.440		301.288	34.70	31.47	10.43
		s.e.[2]	0.1171	0.1263	0.1924	0.1999	0.1591		0.033	0.2097	0.0807	0.0613
	6	a					-13.239					
		b					27.073					
		s.e.[2]					0.1658					
	7	a					-13.076					
		b					18.972					
		s.e.[2]					0.0965					
Pupal		a	-13.11	-14.970	-12.146	-16.152	-13.619	-6.662	-22.543			
		b	21.32	25.708	18.745	24.686	18.461	8.092	39.173			
		s.e.[2]	0.1470	0.1754	0.2329	0.1921	0.2164	0.1448	0.052			
Adult		a	-15.51	-14.850	-10.238	-16.845	-12.838	-8.697	-40.546	-30.98	-33.16	-14.65
		b	14.60	14.042	9.739	16.443	12.046	7.969	37.883	33.90	33.21	13.91
		s.e.[2]	0.1178	0.1454	0.1766	0.1430	0.1665	0.1433	0.039	0.1900	0.0630	0.0906

[1]In the equation:

$$y_x = \frac{1}{1+e^{-(a_x+b_x t)}} - \frac{1}{1+e^{-(a_{x+1}+b_{x+1} t)}}$$

where:

y_x = estimate of the proportion of the insects in the instar.
x = the instar under consideration.
$x+1$ = the next instar.
e = the base of natural logarithms = 2.71828
a and b = parameters calculated from data
t = the accumulated reciprocal units of development (RUD) since initiation.

The 1st larval instar and adult emergence are special cases:

1st larval instar: $y = 1 - \frac{1}{1+e^{-(a+bt)}}$

Adult emergence: $y = \frac{1}{1+e^{-(a+bt)}}$

[2]s.e. is the standard error of the estimate.

Table 16.—*Regression coefficients for estimation of the modification of air temperature by the cotton plant using the linear regression equation* $y = a+bx$[1]

Part of plant	Intercept (a)[1]	Slope (b)[1]	Literature source
Short-staple cotton (daytime)			
Leaf:			
Upper	12.6	0.892	(18)
Lower	3.7	.916	(18)
Square	17.5	.796	(15)
Bloom	13.9	.843	(15)
Boll	12.9	.855	(15)
Square bract[2]	17.5	.798	(15)
Boll bract[3]	12.0	.859	(15)
Canopy	10.0	.886	(15)
Terminal	8.6	.901	(15)
Soil surface[4]	23.5	.52	(27)
Short-staple cotton (nighttime)			
Leaf:			
Upper	16.2	.837	(18)
Lower	10.2	1.079	(18)
Square	6.4	.863	(15)
Bloom	11.1	.794	(15)
Boll	6.9	.858	(15)
Square bract[2]	5.9	.870	(15)
Boll bract[3]	6.2	.867	(15)
Canopy	5.5	.878	(15)
Terminal	1.0	.928	(15)
Soil surface[4]	20.4	.52	(27)
Long-staple cotton			
Square	10.6	.841	(28)
Boll	6.8	.887	(28)
Square bract[2]	8.0	.872	(28)
Boll bract[3]	4.0	.920	(28)
Canopy	4.7	.928	(28)
Terminal	1.1	.968	(28)

[1]Where:

y = the estimated temperature in the plant part (°F).

a = the intercept of the regression line.

b = the slope of the regression line.

[2]Temperature between square and bract.

[3]Temperature between boll and bract.

[4]Soil surface temperature in row beneath plant.

Table 17.—*Most common sites occupied by cotton insects*

Insect	Common sites for the following stages: Eggs	Larvae (nymph)	Pupae	Adults
	Pests			
Heliothis zea	Leaf Terminal	Square[1] Bloom Boll[1]	Soil[2]	Canopy.
Heliothis virescens	Leaf Terminal	Square[1] Bloom Boll[1]	--do--	Do.
Spodoptera exigua	Leaf	Square[1] Bloom Boll[1]	Soil[2]	Do.
Trichoplusia ni	--do--	Leaf	Canopy	Do.
Estigmene acrea	--do--	--do--	--do--	Do.
Pectinophora gossypiella	Square[5]	Square[6] Bloom[7] Boll[8]	Soil[2]	Do.
Bucculatrix thurberiella	Leaf	Leaf	Canopy	Do.
Lygus spp.	Terminal	Canopy	—	Do.
	Predators			
Zelus renardii	Leaf	Canopy[9]	—	Do.
Sinea confusa	--do--	--do--	—	Do.
Nabis alternatus	Terminal	--do--	—	Do.
Geocoris spp.	--do--	--do--	—	Do.

[1]Or site between square (boll) and bract (*G* in fig. 2).

[2]About 5 cm deep.

[3]Surface.

[4]Small only.

[5]Site between square (boll) and bract preferred (*G* in fig. 2).

[6]F_1 generation only.

[7]At end of F_1 generation only.

[8]Late season, that is, after the F_1 generation.

[9]Common hiding places for most predators are the growing terminals and between the square or boll and their bracts.

Table 18.—*Reciprocal units of development[1] (RUD) for larval-pupal development for insects fed*

	Diet[2]	Leaves	Bolls	Squares	Bolls +squares
			Laboratory[3]		
Heliothis zea	1.0501±.1191(51)		1.1533±.1126(7)	1.2627±.1434(14)	
H. virescens	1.0356±.2674(65)		1.0827±.0601(9)	1.0320±.2428(8)	
Spodoptera exigua	1.0836±.0876(54)	1.3259±.1296(23)	1.1550±.1065(13)	1.4114±.1315(17)	
Trichoplusia ni	1.3228±.2291(44)	1.4612±.2444(10)			
			Greenhouse		
H. zea					1.5737±.1168(29)
H. virescens					1.7221±.1999(51)
Spodoptera exigua					1.7611±.1531(81)
Trichoplusia ni		1.4136±.1681(146)			
Estigmene acrea		1.2575±.0680(29)			
			Field		
H. zea					1.2747±.1408(20)
H. virescens					1.2409±.1203(8)
Spodoptera exigua					1.5752±.1698(68)
Trichoplusia ni		1.2637±.1081(18)			
Estigmene acrea		2.1170±.7351(11)			

[1]RUD± the standard deviation. Numbers in parentheses are numbers of insects observed.
[2]Diet described by Patana (*59*).
[3]Tests conducted at 25° C with 12 h of fluorescent light and 12 h darkness.

Table 19.—*Pertinent literature references[1] available for population assessments, and diapause of cotton pests and their predators in southern Arizona*

Species	Population assessment	Winter diapause
Heliothis zea	1, 17, 19, 34, 41 49, 50, 63, 67	33
H. virescens	63, 67	33
Spodoptera exigua	17, 19, 34, 50	33
Trichoplusia ni	17, 19, 34, 50	
Pectinophora gossypiella	19, 34, 50, 57, 67	51, 57, 78, 79
Estigmene acrea	17, 19, 34, 50	
Lygus spp.	35, 50, 65	2, 52, 69
Sinea confusa	50	
Nabis alternatus	50, 67	73, 68
N. americoferus	50	68
Geocoris punctipes	50, 63, 67	
G. pallens	50	
Orius tristicolor	50, 63	
Collops vittatus	50	
Hippodamia convergens	45, 50, 63	
Chrysopa carnea	19, 50, 67	

[1]See Literature Cited page 33.

Table 20.—*Daily fecundity estimates with reciprocal units of development (RUD) as the independent variable*

Species	Coefficients[1] *a*	*b*	*s.e.*[2]	Base fecundity[3]
Heliothis zea	−4.025	10.40	0.0851	2165
H. virescens	−3.294	11.42	.1054	2773
Spodoptera exigua	−3.008	13.34	.1611	2390
Trichoplusia ni	−3.319	9.318	.0847	1950
Estigmene acrea	−3.964	30.28	.1290	1717
Pectinophora gossypiella	−3.246	11.932	.1545	435

$$y_x = \frac{1}{1+e^{-(a_x + b_x t)}} - \frac{1}{1+e^{-(a_{x+1} + b_{x+1} t)}}$$

where:
y_x = estimate of the proportion of the insects in the instar
x = the instar under consideration
$x + 1$ = the next instar
e = the base of natural logarithms = 2.71828....
a and b = parameters calculated from data.
t = the accumulated RUD since initiation

[2]s.e. is the standard error of the estimate.
[3]Mean fecundity with minimal stress from Fye and McAda (*37*) and Fye and Poole (*39*). Should be adjusted to reflect the effects of high temperatures during the larval period (*39*).

Table 21.—*Parameters for the estimation of the proportions of eggs hatched*[1]

Species	Coefficients		
	a	*b*	*s.e.*[2]
Heliothis zea	−37.28	37.82	0.0656
H. virescens	−54.42	54.69	.1673
Spodoptera exigua	−78.84	79.54	.2367
Trichoplusia ni	−30.25	30.34	.1590
Estigmene acrea	−20.71	20.59	.2812
Pectinophora gossypiella	−54.85	55.39	.0681
Bucculatrix thurberiella	−64.98	64.57	.1410
Sinea confusa	− .3888	.6032	.2925
Zelus renardii	−8.932	9.397	.2348
Nabis alternatus	−17.47	18.39	.1465

$$y_x = \frac{1}{1+e^{-(a_x+b_x t)}} - \frac{1}{1+e^{-(a_{x+1}+b_{x+1} t)}}$$

where:

y = estimate of the proportion of the insects in the instar

x = the instar under consideration

$x+1$ = the next instar

e = the base of natural logarithms = 2.71828. . .

a and b = parameters calculated from data

t = the accumulated reciprocal units of development (RUD) since initiation.

[2] *s.e.* is the standard error of the estimate.

Table 22.—*Fecundity and fertility reduction by high temperatures (Fye and Poole, 39)*

Species	Exposed as	Hours subjected to 35° C (daily)[1]				Hours subjected to 40° C (daily)[1]			
		2	4	8	16	2	4	8	16
Heliothis zea	L-P[2]	145(100)	290(100)	520(100)	920(19)	300(100)	640(0)	1360(0)	([3])
	Adult	45(100)	110(100)	220(100)	440(0)	100(62)	200(37)	280(0)	400(0)
H. virescens	L-P[2]	150(100)	290(100)	520(100)	960(58)	310(83)	660(0)	1280(0)	([3])
	Adult	70(100)	140(100)	280(100)	560(0)	140(41)	240(24)	520(10)	880(0)
Spodoptera exigua	L-P[2]	95(100)	180(100)	340(100)	600(52)	200(72)	380(56)	720(19)	([3])
	Adult	35(100)	70(100)	140(63)	280(6)	70(68)	140(63)	280(29)	560(1)
Trichoplusia ni	L-P[2]	95(100)	190(100)	360(100)	680(13)	210(65)	460(28)	1000(0)	([3])
	Adult	70(100)	140(100)	280(100)	560(0)	140(58)	240(6)	280(0)	480(0)
Estigmene acrea	L-P[2]	155(100)	300(72)	580(0)	1200(0)	330(0)	740(0)	([3])	([3])
	Adult	30(100)	60(100)	120(100)	240(28)	60(56)	80(3)	160(0)	240(0)
Pectinophora gossypiella	L-P[2]	120(100)	240(100)	480(100)	920(7)	280(62)	560(27)	1160(0)	([3])
	Adult	70(100)	150(100)	300(49)	560(2)	140(40)	280(7)	560(1)	1040(0)

[1] Numbers without parentheses are the accumulated high temperatures which equal the number of 2-h periods multiplied by the number of exposures (or the number of days) multiplied by the degrees Celsius in excess of 30°. Numbers with parentheses represent the percentage of eggs hatching using the potential fecundity (table 20) as a base.

[2] Larvae and pupae.

[3] No survivors.

Table 23.—*Prey point values (PV) consumed daily by 3 hemipterous predators*

Predator	Stage	Mean PV per stage	Estimated total prey PV consumed daily[1] at—				
			15° C	20° C	25° C	30° C	33° C
Sinea confusa	N1	17	0.5	1.5	2.2	3.7	4.7
	N2	27	.7	3.1	4.8	9.3	10.0
	N3	42	[2]	4.8	7.8	13.1	16.2
	N4	85	[2]	7.7	12.3	23.0	27.4
	N5	170	[2]	9.9	16.7	30.4	[2]
	Ad	[3]24			[3]24.3		
Zelus renardii	N1	10	.3	1.0	1.5	2.4	2.9
	N2	20	.7	2.4	3.5	6.1	7.7
	N3	40	1.5	4.8	6.9	11.1	14.8
	N4	90	2.7	9.0	14.8	19.6	30.0
	N5	180	3.2	11.8	21.2	20.0	[2]
	Ad	[3]25			[3]25.2		
Nabis alternatus	N1	8	.6	1.3	2.2	2.7	3.2
	N2	8	.7	1.4	2.9	2.9	3.6
	N3	16	1.3	3.0	5.2	6.4	6.7
	N4	32	2.2	5.2	9.1	10.7	13.9
	N5	76	3.9	7.8	12.5	19.0	22.4
	Ad	[3]15			[3]15.6		

[1]Mean PV consumed during stage divided by the mean longevity of stage (table 10).

[2]No data available on developmental time.

[3]Daily at 25° C. Based on mean number of points of several prey (table 2) consumed during the mean adulthood (table 12). Data on longevity at remaining temperatures are inadequate for further projection.

Table 24.—*Searching efficiency factors[1] of individual predators paired with prey*

Area (cm²)	Searching efficiency factors for nymphal[2] and adult predators paired with mobile and immobile[3] prey— N1	N2	N3	N4	N5	Adult
			Sinea confusa			
400	0.9(.9)	0.9(.9)	0.9(.9)	0.9(.9)	0.9(.9)	0.9(.9)
900	.9(.9)	.9(.9)	.9(.9)	.9(.9)	.7(.9)	.7(.9)
1400	.9(.9.)	.9(.9)	.9(.9)	.9(.9)	.7(.9)	.7(.9)
2100	.8(.9)	.9(.9)	.9(.9)	.8(.9)	.7(.9)	.7(.9)
3300	.8(.9)	.7(.9)	.8(.9)	.7(.9)	.6(.9)	.6(.9)
5200	.6(.9)	.7(.8)	.7(.9)	.7(.9)	.6(.8)	.6(.7)
7400	.6(.9)	.7(.8)	.7(.9)	.7(.9)	.5(.7)	.6(.7)
			Zelus renardii			
400	.8(.9)	.8(.9)	.8(.8)	.9(.9)	.9(.9)	.9(.9)
900	.8(.9)	.8(.9)	.8(.8)	.9(.9)	.8(.9)	.9(.9)
1400	.8(.9)	.6(.9)	.8(.8)	.8(.9)	.8(.9)	.9(.9)
2100	.8(.9)	.6(.9)	.8(.8)	.8(.9)	.8(.8)	.8(.9)
3300	.7(.9)	.6(.9)	.7(.8)	.8(.9)	.6(.8)	.7(.9)
5200	.6(.9)	.6(.9)	.7(.8)	.7(.8)	.6(.8)	.5(.7)
7400	.6(.9)	.6(.9)	.7(.8)	.7(.8)	.6(.7)	.5(.7)
			Nabis alternatus			
400	.8(.9)	.8(.9)	.9(.9)	.9(.9)	.9(.9)	.8(.7)
900	.8(.9)	.8(.9)	.8(.9)	.9(.9)	.9(.9)	.8(.7)
1400	.8(.9)	.7(.9)	.8(.9)	.9(.9)	.9(.9)	.8(.7)
2100	.8(.9)	.7(.9)	.8(.9)	.9(.9)	.8(.9)	.8(.7)
3300	.8(.9)	.7(.9)	.8(.9)	.9(.9)	.8(.9)	.8(.7)
5200	.7(.9)	.7(.9)	.8(.9)	.9(.9)	.8(.9)	.8(.7)
7400	.7(.9)	.7(.9)	.8(.9)	.9(.9)	.8(.9)	.8(.7)
			Collops vittatus			
400						.3(.7)
900						.3(.7)
1400						.3(.7)
2100						.3(.7)
3300						.3(.7)
5200						.3(.7)
7400						.3(.7)
			Hippodamia convergens			
400						.2(.9)
900						.2(.9)
1400						.2(.9)
2100						.2(.9)
3300						.2(.9)
5200						.2(.9)
7400						.2(.8)

[1]Probability of capture of the prey in 24 h in arenas of indicated areas.
[2]N, nymph. Arabic numeral denotes instar.
[3]Factor for immobile prey in parentheses.

Table 25.—*Potential survival of pupating insects after cultivation of cotton*

Height (cm)	Proportion of row in which pupation occurs	Refugium[1]	Potential[2] survival
	Percent	*Percent*	*Percent*
3-14	<15	15	100
16	20	15	75.0
35	40	15	37.5
54	60	15	25.0
72	80	15	100[3]
91	100	100	100[3]

[1]15 percent, that is, a 15-cm uncultivated band in a 1-m row.
[2]When cultivation ceases, potential survival becomes 100 percent for remainder of season. Cultivation usually ceases when cotton is 45 to 60 cm in height.

APPENDIX B—RECIPROCAL UNIT OF DEVELOPMENT ACCUMULATION PROGRAM

The following program for the accumulation of RUD conforms to the American National Standards Institute standards and is self-explanatory.

```
PROGRAM ACCUM      73/73   OPT=0 TRACE          FTN 4.5+414          06/29/76  1'
      PROGRAM ACCUM(INPUT,OUTPUT,TAPE5=INPUT,TAPE6=OUTPUT)
      COMMON/ITEMP(366,12)
      DIMENSION MONTH(366),DAY(366),YEAR(366),CRUD(61)
      DIMENSION ITEMP(12),CRUDS(12),NIGHT(12),AIRTMP(8)
      DIMENSION HEADER(14),CARD(16),AIRTMP(8),AIRTMP(8),NIGHT(6),
     1 DATA NIGHT(1),NIGHT(2),NIGHT(3),NIGHT(4),NIGHT(5),NIGHT(6),
     2 /1.1,1.0,0.0,0.0,0.1,1.1/
     1 DATA AIRTMP(1),AIRTMP(2),AIRTMP(3),AIRTMP(4),AIRTMP(5),AIRTMP(6),
     2 AIRTMP(7),AIRTMP(8)/SHACCUM,SHULATE,SHRUD.SH (AT ,SH4IR T,
     3 SHEMPER,SHATURE,SHS)/
C
C THE OBJECTIVE OF THIS PROGRAM IS TO CALCULATE AND ACCUMULATE RECIPRO-
C CAL UNITS OF DEVELOPMENT AS A FUNCTION OF TEMPERATURE. CENTRAL
C MEMORY IS RESERVED FOR RUD IN THE RANGE 50 DEG. F. TO 110 DEG. F.
C (INCLUSIVE). TEMPERATURES ARE CALCULATED IN BOTH FARENHEIT AND
C CELSIUS SCALES. TWO FUNCTION SUBROUTINES MUST BE PROVIDED BY THE
C USER:
C     FUNCTION FUNCR(TEMPF,TEMPC) ACCEPTS A TEMPERATURE (IN BOTH FAR-
C     ENHEIT AND CELSIUS) AND RETURNS THE CORRESPONDING CRUD.
C     FUNCTION KTEMP(ITEMP,CONST) ACCEPTS A TEMPERATURE AND TWO
C     REGRESSION PARAMETERS AND RETURNS A MODIFIED INTEGER TEMPERATURE
C     AS CALCULATED BY THE FUNCTION REGRESSION
C
C DATA MUST BE INPUT TO THIS PROGRAM IN THE FOLLOWING ORDER:
C 1.) TITLE CARD - CONTAINS A 70 CHARACTER RUN TITLE. THE NUMBER
C                  OF DAYS OF TEMPERATURE DATA AND THE NUMBER OF
C                  TEMPERATURE MODIFICATION REGRESSION SETS TO BE PER-
C                  FORMED. THE FORMAT IS: (A70,2I5)
C 2.) DATA CARDS - A MAXIMUM OF ONE LEAP-YEAR OF TEMPERATURE DATA
C                  (366 DAYS) CAN BE PROCESSED IN ANY ONE RUN. EACH
C                  CARD CONTAINS ONE DAY OF DATA (TWELVE TEMPERATURE
C                  READINGS) AT TWO HOUR INTERVALS ALONG WITH THE
C                  MONTH, DAY, AND YEAR OF THE READINGS. THE FORMAT
C                  USED IS: FORMAT(12I3,3X,3A2)
C 3.) REGRESSION DATA CARDS - EACH CARD CONTAINS A 40 CHARACTER
C                  IDENTIFICATION LABEL AND TWO SETS OF PARAMETERS.
C                  SION PARAMETERS. THE FIRST SET OF PARAMETERS
C                  CORRESPONDS TO DAYTIME CONDITIONS, AND THE SECOND
C                  SET OF PARAMETERS CORRESPONDS TO NIGHTTIME CONDI-
C                  TIONS. IT IS ASSUMED TO APPLY TO BOTH DAY AND
C                  NIGHTTIME CONDITIONS. WHEN USED IN A FUNCTION
C                  CALL, THE FIRST PARAMETER OF A SET THAT IS EN-
C                  COUNTERED ON THIS CARD WILL BE THE FIRST PARAM-
C                  METER SPECIFIED IN THE CALL. THE INPUT FORMAT
C                  USED IS: FORMAT(8A5,4F10.0)
C
C THE INPUT FILE IS DENOTED AS UNIT NUMBER 5, OUTPUT FILE AS UNIT NUM-
C BER 6. TO CHANGE THESE DESIGNATIONS, ALTER THE FOLLOWING DATA STATE-
C MENT ACCORDINGLY. (PLEASE CHECK WITH LOCAL INSTALLATION FOR THE
C APPROPRIATE CONTROL CARDS.) IF ANY ARE NEEDED, FOR PROPER FILE
C HANDLING AND DISPOSITION.)
      DATA INP,IOUT/5,6/
C
C     READ THE TITLE CARD
```

```
C
      READ(INP,1) (HEADER(I),I=1,14),NDAYS,NREGR
    1 FORMAT(14A5,2I5)
C
CC   INITIALIZE THE OUTPUT TO THE TOP OF A NEW PAGE
C
      WRITE(IOUT,1000) (HEADER(I),I=1,14)
 1000 FORMAT(1H1,9X,14A5)
      WRITE(IOUT,1001) NREGR,NDAYS
 1001 FORMAT(10X,I5,53H TEMPERATURE MODIFICATION REGRESSIONS WILL BE RUN
     1 ON ,I5,25H DAYS OF TEMPERATURE DATA,//,10X,81HTABLE OF CALCULATED
     2 RECIPROCAL UNITS OF DEVELOPMENT (FOR TWO HOUR TIME INTERVALS),//
     3,19X,12HTEMPERATURES,20X,21HCALCULATED RECIPROCAL,/,11X,9HFARENHEI
     4T,12X,7HCELSIUS,11X,20HUNITS OF DEVELOPMENT,/)
C
CCC  CALCULATE AND STORE THE CRUD FOR THE INTERVAL 50 DEG. F. THROUGH
     110 DEG. F.
C
      CONVRT = 5./9.
      DO 20 I=1,61
         TEMPF = FLOAT(I)+49.
         TEMPC = CONVRT*(TEMPF-32.)
         CRUD(I) = FUNCR(TEMPF,TEMPC)
         WRITE(IOUT,1010) TEMPF,TEMPC,CRUD(I)
 1010 FORMAT(11X,F8.4,12X,F8.4,18X,F7.5)
   20 CONTINUE
C
CCC  READ IN A DAY OF TEMPERATURE DATA AND STORE IT, THEN CALCULATE CRUD
CCC  FOR EACH TWO-HOUR INTERVAL, DAILY ACCUMULATION, AND TOTAL ACCUMULA-
CCC  TION, AND WRITE OUT THE RESULTS
C
      ACCRUD = 0.
      WRITE(IOUT,1000) (HEADER(I),I=1,14)
      WRITE(IOUT,1020) (AIRTMP(I),I=1,8)
 1020 FORMAT(10X,8A5,//,11X,4HDATE,45X,4HTIME,43X,4HMEAN,5X,5HDAILY,5X
     1,5HTOTAL,/,9X,8HMO DY YR,5X,4H0200,3X,4H0400,3X,4H0600,3X,4H0800
     2,3X,4H1000,3X,4H1200,3X,4H1400,3X,4H1600,3X,4H1800,3X,4H2000,3X
     3,4H2200,3X,4H2400,4X,4HTEMP,5X,5HINCRE,5X,4HCRUD,/)
      DO 30 I=1,NDAYS
         READ(INP,3) (ITEMP(I,J),J=1,12),MONTH(I),DAY(I),YEAR(I)
         DCRUD = 0.
         MTEMP = 0
         DO 40 J=1,12
            MTEMP = MTEMP+ITEMP(I,J)
            INDEX = ITEMP(I,J)-49
            IF(INDEX.GE.1)   GO TO 41
            INDEX = 1
            GO TO 42
   41       IF(INDEX.LE.61)   GO TO 42
            INDEX = 61
   42       CRUDIN = CRUD(INDEX)
            CRUDS(J) = CRUDIN
            DCRUD = DCRUD+CRUDIN
            ACCRUD = ACCRUD+CRUDIN
   40    CONTINUE
         MTEMP = IFIX((FLOAT(MTEMP)/12.)+0.5)
         WRITE(IOUT,1030) MONTH(I),DAY(I),YEAR(I),(ITEMP(I,L),L=1,12),
```

```
     1                        MTEMP,(CRUDS(L),L=1,12),DCRUD,ACCRUD
   3 FORMAT(12I3,3RX,3A2)
1030 FORMAT(2X,4HTEMP,2X,3(1X,A2),1X,12(4X,I3),5X,I3,/,2X,4HCRUD,14X
  1,12F7.4,10X,F7.4,2X,F10.4,/)
  30 CONTINUE
C
CC  REPEAT SAME PROCESS FOR ANY TEMPERATURE-MODIFICATION REGRESSIONS. . .
C
      IF(NREGR.EQ.0)   STOP
      DO 50 K=1,NREGR
C
CC  READ IN REGRESSION TITLE AND ITS PARAMETERS
C
      READ(INP,4) (RHEADR(I),I=1,8),CONSTD,SLOPED,CONSTN,SLOPEN
      IF((CONSTN.NE.0.).OR.(SLOPEN.NE.0.)) GO TO 51
      CONSTN = CONSTD
      SLOPEN = SLOPED
  51  WRITE(IOUT,1000) (HEADER(I),I=1,14)
      WRITE(IOUT,1020) (RHEADR(I),I=1,8)
      ACCRUD = 0.
      DO 60 I=1,NDAYS
         DCRUD = 0.
         MTEMP = 0
         DO 70 J=1,12
            IF(NIGHT(J).EQ.1)   GO TO 71
            JTEMP(J) = KTEMP(ITEMP(I,J),CONSTD,SLOPED)
            GO TO 72
  71        JTEMP(J) = KTEMP(ITEMP(I,J),CONSTN,SLOPEN)
  72        MTEMP = MTEMP+JTEMP(J)
            INDEX = JTEMP(J)-49
            IF(INDEX.GE.1)   GO TO 73
            INDEX = 1
            GO TO 74
  73        IF(INDEX.LE.61)   GO TO 74
            INDEX = 61
  74        CRUDIN = CRUD(INDEX)
            CRUDS(J) = CRUDIN
            DCRUD = DCRUD+CRUDIN
            ACCRUD = ACCRUD+CRUDIN
  70     CONTINUE
         MTEMP = IFIX((FLOAT(MTEMP)/12.)+0.5)
         WRITE(IOUT,1030) MONTH(I),DAY(I),YEAR(I),(JTEMP(L),L=1,12),
     1                    MTEMP,(CRUDS(L),L=1,12),DCRUD,ACCRUD
  60  CONTINUE
      WRITE(IOUT,1040) CONSTD,SLOPED,CONSTN,SLOPEN
   4 FORMAT(8A5,4F10.0)
1040 FORMAT(//,10X,27HREGRESSION PARAMETERS USED:,/,10X,20HDAY:    INTE
  1RCEPT = ,F10.4,10H, SLOPE = ,F10.4,/,10X,20HNIGHT:  INTERCEPT = ,
  2F10.4,10H, SLOPE = ,F10.4)
  50 CONTINUE
      STOP
      END
```

U.S. GOVERNMENT PRINTING OFFICE : 1979—O-294-769

END