AgEcon SEARCH
RESEARCH IN AGRICULTURAL & APPLIED ECONOMICS

The World's Largest Open Access Agricultural & Applied Economics Digital Library

This document is discoverable and free to researchers across the globe due to the work of AgEcon Search.

Help ensure our sustainability.

Give to AgEcon Search

AgEcon Search
http://ageconsearch.umn.edu
aesearch@umn.edu

*Papers downloaded from **AgEcon Search** may be used for non-commercial purposes and personal study only. No other use, including posting to another Internet site, is permitted without permission from the copyright owner (not AgEcon Search), or as allowed under the provisions of Fair Use, U.S. Copyright Act, Title 17 U.S.C.*

No endorsement of AgEcon Search or its fundraising activities by the author(s) of the following work or their employer(s) is intended or implied.

Application of RCSR Mechanism in Two-row Harvester Cutting Device

SUN Shu-min *

School of Mechanical Engineering, Southwest Jiaotong University, Chengdu 610031, China

Abstract Traditionally, the transmission device for cutter adopts gear mechanism combined with planar crank-rocker mechanism. In line with this drawback, this paper presents a practical spatial linkage mechanism. Through three-dimensional modeling and kinematic analysis, it obtains the equation of motion for output displacement, speed and acceleration. Besides, it gets the kinetic curve through emulation. The emulation results indicate that RCSR mechanism can realize smooth and stable output of cutter, laying a foundation for future dimensional synthesis of the mechanism.

Key words Cutting device, Spatial linkage mechanism, Kinematic analysis, Emulation

At present, most head-feeding type rice harvester cutting devices adopt gear mechanism combined with planar crank-rocker mechanism as their power transmission mechanism[1-2], to turn the rotation of horizontal transmission shaft into the reciprocal swinging of the joystick around the axis that is vertical to the transmission shaft. However, harvesters operate in fields. If using open gears, the structure is relatively simple, but gears are easily flooded by muddy water and subject to corrosion. Therefore, harvester manufacturers generally apply enclosed gears. The enclosed gear transmission mechanism features excellent lubrication, strict requirement for sealing of the gear box, and easy wear of the seal ring, accordingly needing regular replacement. As a result, enclosed gears suffer from complex structure of transmission mechanism and high manufacturing and using cost.

Featuring low speed and precision but poor working condition, agricultural machinery requires reliable working, low manufacturing cost, convenient operation and easy maintenance. In line with these features and requirements, we can use the spatial linkage mechanism to take the place of the gear mechanism combined with planar crank-rocker mechanism commonly used in the head-feeding type harvester. The spatial linkage mechanism is simple in structure, reliable in working, adapted to hostile working condition, able to transmit the rotation of two axes perpendicular to each other in different spatial planes, and can meet the functional requirement of head-feeding type harvester cutting device.

1 Structure and operation principle of the spatial linkage mechanism

The spatial linkage mechanism mainly consists of the crank, linkage, and rocker. It can turn the rotation of horizontal transmission shaft into the reciprocal swinging of the rocker around the axis that is vertical to the transmission shaft. The three-dimensional explosion model is shown in Fig. 1.

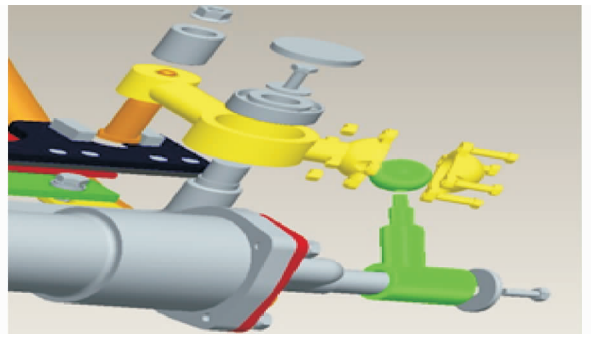

Fig. 1 Three-dimensional explosion drawing for the mechanism

The mechanism structure is shown in Fig. 2. Power source of the mechanism comes from the horizontal transmission shaft of the cutting table. When the transmission shaft rotates, the crank connected on the transmission shaft moves accordingly; through a cylindrical pair, the crank transmits the power to the linkage, to bring the linkage to move and rotate in a certain spatial range; the linkage transmits power to the rocker through a spherical pair; the rocker gets connected with the framework through the tapered roller bearing, forming the rotation pair and bringing the rocker to reciprocate in a certain angle around a plumb axis; through the shifting yoke bushing ring mounted on the rocker, it forms high pair connection with moving cutter, transmits power to the moving cutter, and finally realizes reciprocal linear motion of the moving cutter. In the mutual action of moving cutter and stationary cutter, the harvester completes operation of cutting rice.

2 Analysis of kinetic characteristics of the spatial linkage mechanism

To conduct further kinematic analysis, a kinetic sketch of

Received: September 12, 2012 Accepted: October 21, 2012

Supported by Project of Department of Education of Sichuan Province (Grant No.: 12ZB321); the Key Disciplinary of Mechanical Design and Theory of Xinhua University (Grant No.: XZD0813 – 09 – 1).

* Corresponding author. E-mail: ssmin2000@163.com

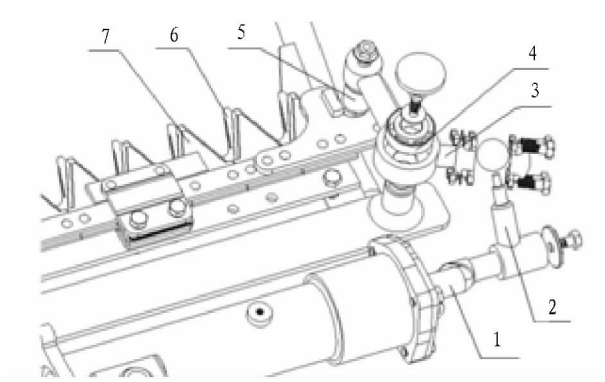

Note: 1. Crank; 2. Linkage; 3. Rocker; 4. Tapered roller bearing; 5. Shifting yoke bushing ring; 6. Stationary cutter; 7. Moving cutter.

Fig. 2 Structural drawing for the mechanism

the mechanism is abstracted in Fig. 3. It shows that this mechanism is a spatial RCSR mechanism, two linkages $\overrightarrow{AB}$ and $\overrightarrow{CD}$ rotate around point A and D with partial moment of $\overrightarrow{S_0}$ and $\overrightarrow{S_1}$ respectively.

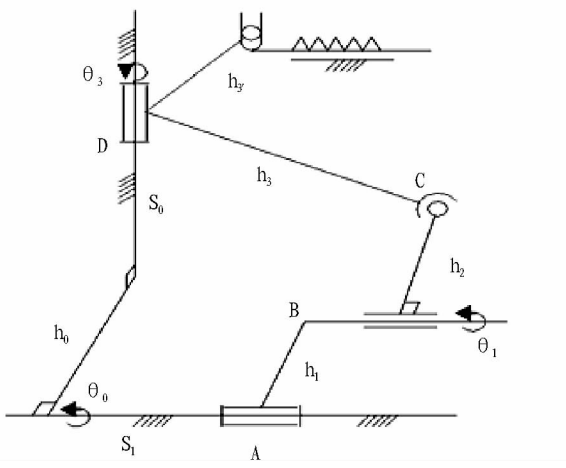

Fig. 3 Kinetic sketch of the linkage mechanism

In the sketch, vectors $\overrightarrow{S_2}$ and $\overrightarrow{h_2}$ are vertical to each other, thus can be deemed as a similar complex vector. In the sketch, *m* signifies the position of the *m*-th spatial rigid body, θ_{1m} and θ_{3m} are input and output angles of m position, so the closed vector equation of complex vectors[3] is as follows:

$$\sum_{p}^{q} = 0\ \overrightarrow{R_p} = 0,\ q = 6 \tag{1}$$

We can get:

$$\overrightarrow{L_{m(\alpha,\beta,\gamma)}} = -\sum_{p}^{q} = 0 Rp,\ q = 5 \tag{2}$$

$$(\overrightarrow{h_2} + \overrightarrow{S_2}) = -\sum_{p}^{q} = 0\ \overrightarrow{R_p} \tag{3}$$

On the basis of theorem of similar complex vector, there is:

$$(\overrightarrow{S_2} + \overrightarrow{h_2})^2 = (\sum_{P}^{5} = 0\ \overrightarrow{R_P}) \tag{4}$$

Using the spatial cosine matrix[4] to cancel the progress variable S_2, we can get the relational expression of input and output displacement:

$$A\sin^2\theta_{1m} + B\sin\theta_{1m}\cos\theta_{1m} + C\sin\theta_{1m} + D\theta_{1m} + E = 0 \tag{5}$$

Through derivation of equation (5), we get the relational expression of input and output speed:

$$A\sin_2\theta_{1m} + B\cos\theta_{1m}\sin\theta_{1m} + C\sin\theta_{1m} + 2\theta_{1m}A\cos\theta_{1m}\sin\theta_{1m} - D\theta_{1m}\sin\theta_{1m} + D\cos\theta_{1m} + C\theta_{1m}\cos\theta_{1m} + B\theta_{1m}\cos_2\theta_{1m} - B\theta_{1m}\sin_2\theta_{1m} + E = 0 \tag{6}$$

Through derivation of equation (6), we get the relational expression of input and output acceleration:

$$4A(\theta_{1m})2\cos2\theta_{1m} - 2D(\theta_{1m})2\cos\theta_{1m} - 2D(\theta_{1m})2\sin\theta_{1m} + 4A\theta_{1m}\sin2\theta_{1m} + 4B\theta_{1m}\cos2\theta_{1m} + 4C\theta_{1m}\cos\theta_{1m} - 4D\theta_{1m}\sin\theta_{1m} - 4B(\theta_{1m})2\sin2\theta_{1m} + 2C\sin\theta_{1m} + A + 4E - A\cos2\theta_{1m}B\sin2\theta_{1m} - 2D\theta_{1m}\cos\theta_{1m} + 2A\theta_{1m}\sin2\theta_{1m} + 2D\cos\theta_{1m} + 2B\theta_{1m}\cos2\theta_{1m} + 2C\theta_{1m}\cos\theta_{1m} = 0 \tag{7}$$

where, h_1 is the length of the crank 1, h_2 is the length of the linkage 2, h_3 is the length of the connecting arm of rocker 3, S_4 is the distance from rotation central line of crank 1 to moving plane of rocker 3, h_0 is the distance from rotation central line of crank 1 to rotation central line of rocker 3, α_{23} is the initial included angle of component 2 and 3, and α_{30} is initial included angle of component of component 3 and 0.

where,

$A = 0.5(F^2 - G^2)$

$B = FG$

$C = GHctg\alpha_{23} - h_1F/\sin2\alpha_{23}$

$D = -HFctg\alpha_{23} - h_1G/\sin2\alpha_{23}$

$E = -0.5(F^2 + H^2\ ctg\alpha_{23}) + [h_3(h_0\cos\theta_{3m} - S_1\sin\theta_{3m}\sin\alpha_{23}) - S_0S_1\cos\alpha_{30} + 0.5(h_0^2 + h_2^2 + h_3^2 + S_0^2 + S_1^2)]/\sin\alpha_{23}$

$F = S_0\sin\alpha_{30} - h_3\sin\theta_{3m}\cos\alpha_{30}$

$G = h_0 + h_3\cos\theta_{3m}$

$H = S_1 - S_0\cos\alpha_{30} - h_3\sin\theta_{3m}\sin\alpha_{30}$

From equations (5), (6) and (7), it can be found that if input parameters are known, we can get the angular displacement, angular speed and angular acceleration of the rocker 3. The differential motion of rocker in cutter guideway is the motion of the cutter. For example, when structural parameters $S_0 = 15$ *mm*, $S_1 = 55$ *mm*, $h_0 = 10$ *mm*, $h_1 = 20$ *mm*, $h_2 = 100$ *mm*, $h_3 = 40$ *mm*, $\alpha_{23} = 90°$, $\alpha_{30} = 30°$, and the input angle of the crank is 0°, 30°, 60°, 90°, 120°, 150°, 180°, 210°, 240°, 270°, 300°, 330°, 360°, the output data[5] of the rocker and cutter will be as listed in Table 1.

3 Kinetic emulation under ADAMS

To describe the motion of this spatial linkage mechanism in a more vivid way, we can conduct the kinetic emulation with the aid of ADAMS software[6].

To satisfy the requirement that the reciprocal frequency of moving cutter of head-feeding two-row harvester should be 200 times in one minute, travel of moving cutter at 90 to 104 mm, and average transmission ratio (the speed of horizontal transmission shaft to average speed of rocker) in the range of 3.0 to 3.6, we take the initial parameters for the mechanism as follows: h_1 = 110 mm, h_2 =560 mm, h_3 =250 mm, the crank speed is 30 r/s, and the emulation results are shown in Fig. 4 through Fig. 8 (note: the axis of abscissa is time (expressed in seconds) and the axis of ordinates is the displacement (expressed in millimeters), and the acceleration is expressed in mm/sec^2).

Table 1 Corresponding data of input and output

Input/output	Angle of rocker//°	Angular speed of rocker//rad/s	Acceleration speed of rocker//rad/s^2	Cutter displacement//mm	Cutter speed//mm/s	Cutter acceleration//mm/s
0	2.938 6	11.750 8	5.659 9	−425	42.839 9	−1.668 4
30	7.684 5	14.744	1.392 4	−377.666	34.392 2	−10.234 4
60	9.264 7	10.484 5	−2.809 2	−344.406 2	20.579 1	−12.63 7
90	13.458 6	2.186 7	−5.755 4	−329.332 4	4.154 2	−14.495 3
120	17.477 6	−6.814 7	−7.670 4	−334.773 1	−13.057 3	−13.694 5
150	20.563 9	−13.462 6	−5.062 6	−359.772 6	−28.163 9	−11.487 4
180	24.823 5	−14.166 9	−1.706 6	−401.175 4	−40.066	−7.391 6
210	42.867 9	−7.501 9	2.692 1	−451.614 8	−40.585 1	9.778 1
240	33.487 6	−0.558 3	6.574 2	−486.173	−11.151 9	33.792 7
270	22.742 6	1.287 9	7.064 2	−482.659 9	4.535 6	27.044 7
300	15.541 9	3.308 9	2.491 3	−458.392 8	19.378 6	13.800 1
330	7.435 7	6.220 4	3.942 6	−442.108 2	38.573 7	4.959 9
360	2.938 6	11.750 8	5.659 9	−425	42.839 9	−1.668 4

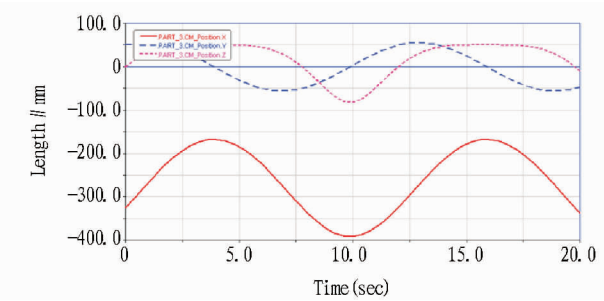

Fig. 4 Linkage displacement curve

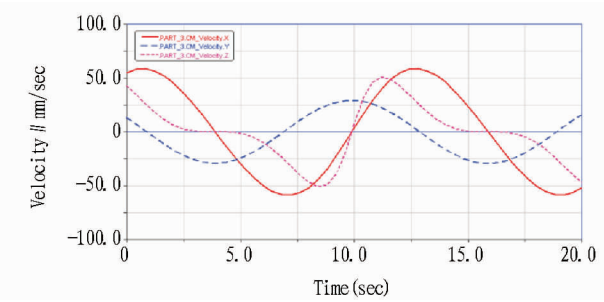

Fig. 5 Linkage speed curve

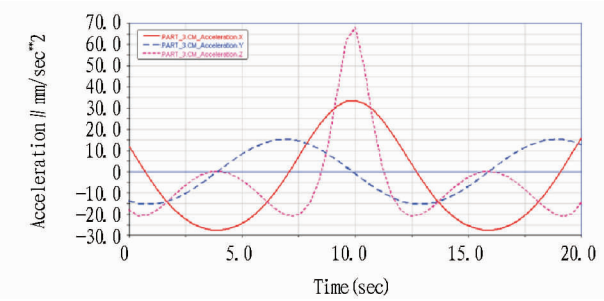

Fig. 6 Linkage acceleration curve

4 Conclusions

Through kinematic analysis and emulation of the spatial linkage mechanism, we can get the kinetic curve of the harvester cutter. From the curve, it can be seen that the output of this new practical mechanism is stable and ideal, so it can replace the traditional combination model of gear mechanism and planar crank joystick mechanism. In future, it is recommended to conduct further dimensional synthesis of this mechanism on the basis of various harvesters, to optimize its performance.

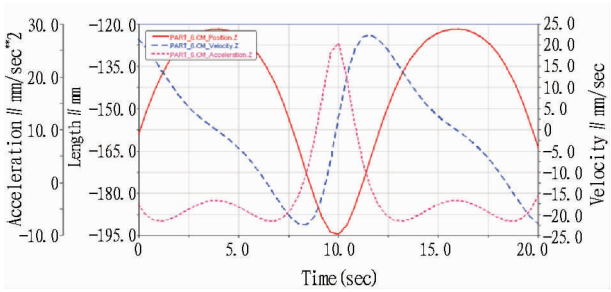

Fig. 7 Rocker kinetic curve

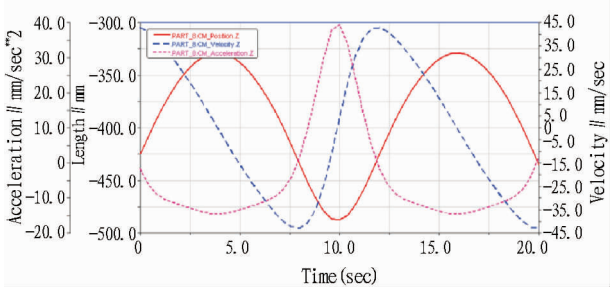

Fig. 8 Kinetic curve for cutting table cutter

References

[1] WU SY. Agricultural mechanics[M]. Beijing: Mechanical Industry Press, 1987. (in Chinese).

[2] LI JP, LIU JF. Feature modeling and movement simulation of suspending link organization[J]. Journal of Agricultural Mechanization Research, 1984. (in Chinese).

[3] YI W. Synthesis and analysis of adjustable RSS'R structure and RSCR[D]. Chengdu: Sichuan University, 2006. (in Chinese).

[4] ZHANG QX. The analysis and synthesis of spatial mechanism[M]. Beijing: Mechanical Industry Press, 1984. (in Chinese).

[5] JOHN GARDNER. Dynamic simulation of mechanism by using MATLAB and SIMULINK[M]. Translated by ZHOU JX, ZHANG L. Xi'an: Xi'an Jiaotong University Press, 2002. (in Chinese).

[6] ZHENG K, HU RX, CHEN LM, *et al.* ADAMS 2005 senior mechanical design application[M]. Beijing: Mechanical Industry Press, 2006. (in Chinese).