RSP 1: 1-26.

AIR POLLUTION DISPERSION MODELING: APPLICATION AND UNCERTAINTY

R. J. Allen, L. R. Babcock and N. L. Nagda*

In the past, air pollution considerations were usually overlooked during the formulation of comprehensive land-use plans. Even today, many in the planning field are not familiar with the tools being used to address air quality considerations. The purpose of this presentation is to describe and evaluate one kind of tool, the dispersion models.

The transport of air pollutants from sources to receptors should be a vital consideration to the planner. Emissions might be considered to be of little consequence, until they do reach and cause damage to human or other receptors. Under some sets of conditions, emissions will be greatly diluted in a short time. At other times, emissions will not be diluted very much at all. If we are to estimate damages, we need to know how much of a given emission will get to a given receptor point.

Our knowledge of urban meteorology remains incomplete, but this does not mean we should ignore dispersion calculations. We are interested in spatial patterns, in relationships between sources and receptors. We want to know how the arrangement of sources affects the air quality at receptor locations. Various kinds of atmospheric pollution dispersion models can be employed. Whatever dispersion model is used, as Figure 1 indicates, it should relate the sources, meteorology, and spatial patterns to air quality at receptor points.

Types of Dispersion Models

In general there are three basic types of dispersion models: box, plume, and puff. The box model is the simplest and the puff the most complicated. These three types form the basis of almost all dispersion simulations which are in use today.

The box model is called a box model for obvious reasons. The region is approximated as having definite sides and a lid as well as a flat bottom at ground level as shown on Figure 2. The flow of air is assumed to be in one

*Doctoral Fellow, bioengineering; Associate professor; and Research Associate, School of Public Health, University of Illinois at the Medical Center, Chicago.

FIGURE 1: Air Quality System[7]

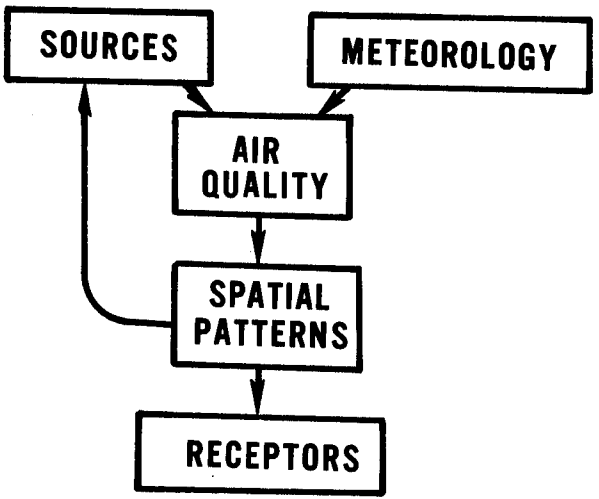

FIGURE 2: Box Model

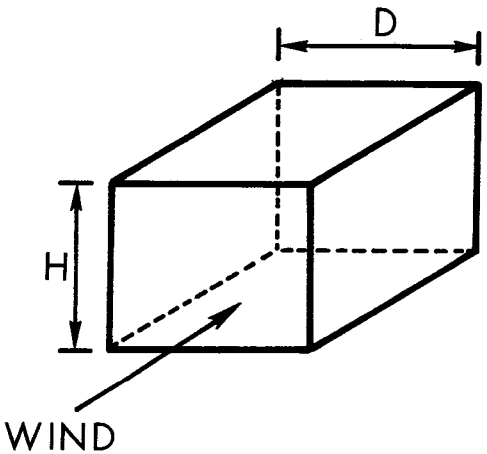

end and out the other. The sources within the box are modeled as a completely mixed and dispersed area source. The equation for this model is:

(1) $$C = q_o + \frac{Q}{D\,H\,U}$$

where C = concentration anywhere in the box

q_o = incoming (background) pollution

Q = source strength within the box

D = width of the area

H = mixing height

U = wind speed

Note that the length of the city has no effect on the result, the important dimensions are simply the crosswind distance and the mixing height.

The calculations for the box model are straight-forward and useful for those back-of-the-envelope approximations which can help define a problem. The limitations are obvious. Urban emissions from point and line sources do not get uniformly back-mixed within a clearly defined rectangular volume. At certain places within the box, the pollution level would be much higher or much lower than that calculated.

Plume models have been developed as a more realistic representation of pollutant dispersion. With realism, unfortunately, comes complexity. With a plume model it is possible to treat sources individually rather than combining them as in the box model [10, 12]. As a plume moves downwind it spreads vertically and horizontally as shown on Figure 3. The concentration varies in space. Plume equations, such as this gaussian equation, enable the characterization of each source.

(2) $$C_{x,y,z} = \frac{Q}{2\pi\sigma_y\sigma_z U} \exp\left[-\tfrac{1}{2}\left(\frac{Y}{\sigma_y}\right)^2\right] \left\{\exp\left[-\tfrac{1}{2}\left(\frac{z-H}{\sigma_z}\right)^2\right] + \exp\left[-\tfrac{1}{2}\left(\frac{z+H}{\sigma_z}\right)^2\right]\right\}$$

where

C = concentration

Q = source emission rate

U = wind speed

σ_y = lateral spread of the plume (a function of downwind distance x)

σ_z = vertical spread of the plume (a function of the downwind distance x)

H = effective stack height

FIGURE 3: Plume Dispersion[12]

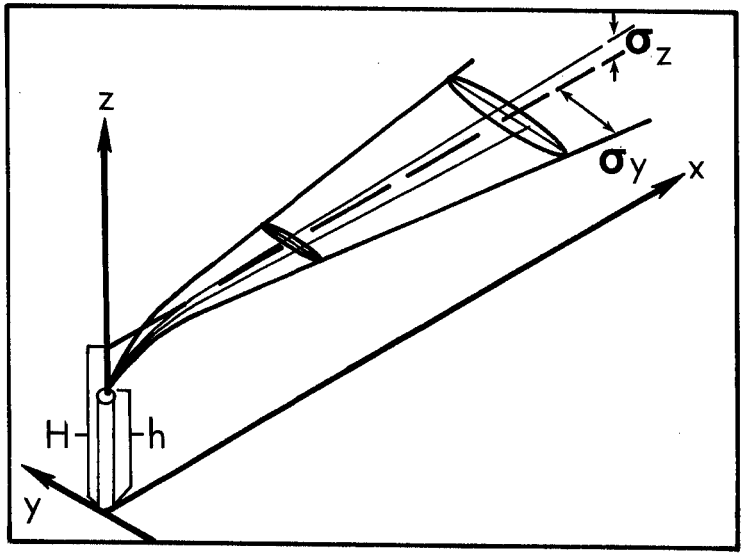

x,y,z = coordinate position of receptors

The total concentration at a receptor point is the sum of the contributions from all sources plus the background concentration.

The equation is obviously much more complicated than that for the box model, but it can readily be solved. The sigmas are estimated from tables or graphs [12]. Also note that the height term, H, is rarely the height of the stack, since plumes are usually buoyant and tend to rise considerably above the stack exit.

Despite the complexity, this equation still does not realistically characterize plume dispersion. Many assumptions remain. The ground surface is assumed to be smooth and flat rather than covered with buildings of various heights. The plume is assumed to be in steady state. That is, its size, shape, and orientation do not change over time. The emission level is assumed to be constant. Note that there are no time variables in the equation.

In summary, plume equations were developed for use with single sources in uncomplicated rural areas over relatively short travel distances such as one to two miles. The risks are obvious when such equations are applied to large complex multiple-source urban regions where dispersion or source-receptor distances can exceed thirty miles.

The final basic model type to be considered is the puff model [9, 10]. Here the emissions are treated as individual puffs as shown on Figure 4. If some weather conditions change, a simulated downwind puff can be made to act accordingly. This is a model which includes time variables. Otherwise, application of the puff model is similar to that for the plume model. The time considerations and the differential nature of the puff equation make it difficult and expensive to apply to a complex multiple source region, unless large core, low cost computer facilities are available.

Meteorological and Dispersion Variables

Before examining how well the models perform, it is necessary to consider the model variables in a little more detail. The results obtained from any model, unfortunately, are completely dependent upon the quality or reality of the input data. Problems with input data are in part responsible for the less than satisfying showing of any of the models.

Perhaps most important is to have an estimate of what is being emitted and where. Of course, it is unlikely that anyone knows exactly what is coming out of every stack in what quantity at every instant. Instead, we settle for crude estimates of emission rates, based upon emission factors and production data [7]. This approach, of course, masks all significant short term variations in emissions.

Thus dispersion calculations often cannot realistically characterize short-term pollution situations. This is one reason why we suggest that improvement

FIGURE 4: Puff Model

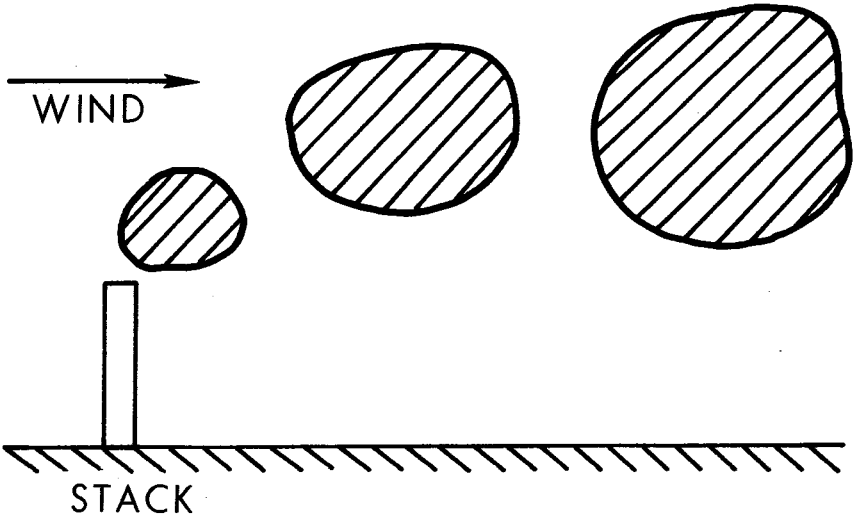

of ambient air quality be assessed on an annual basis. Where necessary, annual averages can be statistically related to short-term situations, but that is a topic best left for another paper.

Emission data, for whatever time interval, must be coupled with information about the atmosphere. In most urban areas, weather data are collected at the airport which is often out in the country, several miles from the city center. However, wind speed and direction can change as air moves from flat farm land into hotter, built-up areas. Also, wind speed and direction change with altitude which is another reason why single altitude airport values cannot adequately characterize the condition of the air mass over a city [11, 12]. Unfortunately, multiple-location weather data are not routinely collected in most cities. Airport data are used because they are usually the only data available.

Next, let us return to those sigmas in the plume and puff equations [12]. These characterize the extent of plume dispersion in the vertical (σ_z) and in the horizontal crosswind (σ_y) directions. These terms are more difficult to characterize than wind speed and direction. Stability is a characterization of the atmosphere's resistance to change. If the atmosphere is unstable, the sigmas are large and the pollutants will be diluted and dispersed quickly. If the atmosphere is stable, the sigmas are small, and little dispersion takes place.

The modelers have come up with an indirect characterization of stability based on surface wind speed and the amount of cloud cover [12]. These indirect proxies are used to define six classes of stability. After estimating the class, the sigmas are obtained from a graph such as Figure 5. The method is not very satisfying. The largest source of error involves the selection of the stability class. Note the order of magnitude variations on the log-log plot. The spreading of plumes is fairly well understood only for short travel distances--a few kilometers. For longer distances, there is little experimental information. In a large urban area, travel distances of 20, 50, or even 100 kilometers are of interest. For most of the plume travel distance, it is hard to say just what is happening to the plume.

Also needed in the plume equations is a value for the effective stack height of each source. Several different equations have been proposed for estimation of plume rise. The Holland equation or the Davidson-Bryant equation are examples [7]. Both equations are functions of stack and atmospheric variables. However, the two equations generally will not give the same answer under the same conditions.

Mixing depth is another important variable. When mixing depth is low (a few hundred feet), the effect upon urban air quality can be profound. Inversions can effectively trap pollutants in a small volume near the ground. Mixing depth is the height of the invisible lid in the box model. It did not appear in the plume or puff equations, but it defines the vertical limit of the three dimensional air space in which the equations can be applied. The mixing depth or mixing height (these terms mean the same thing) is the height to which the pollutants can be expected to readily mix in the atmosphere. When temperature inversions exist, the mixing height can be clearly defined. Usually, the situation is less certain.

FIGURE 5: σ_y-Distance Relationship[12]

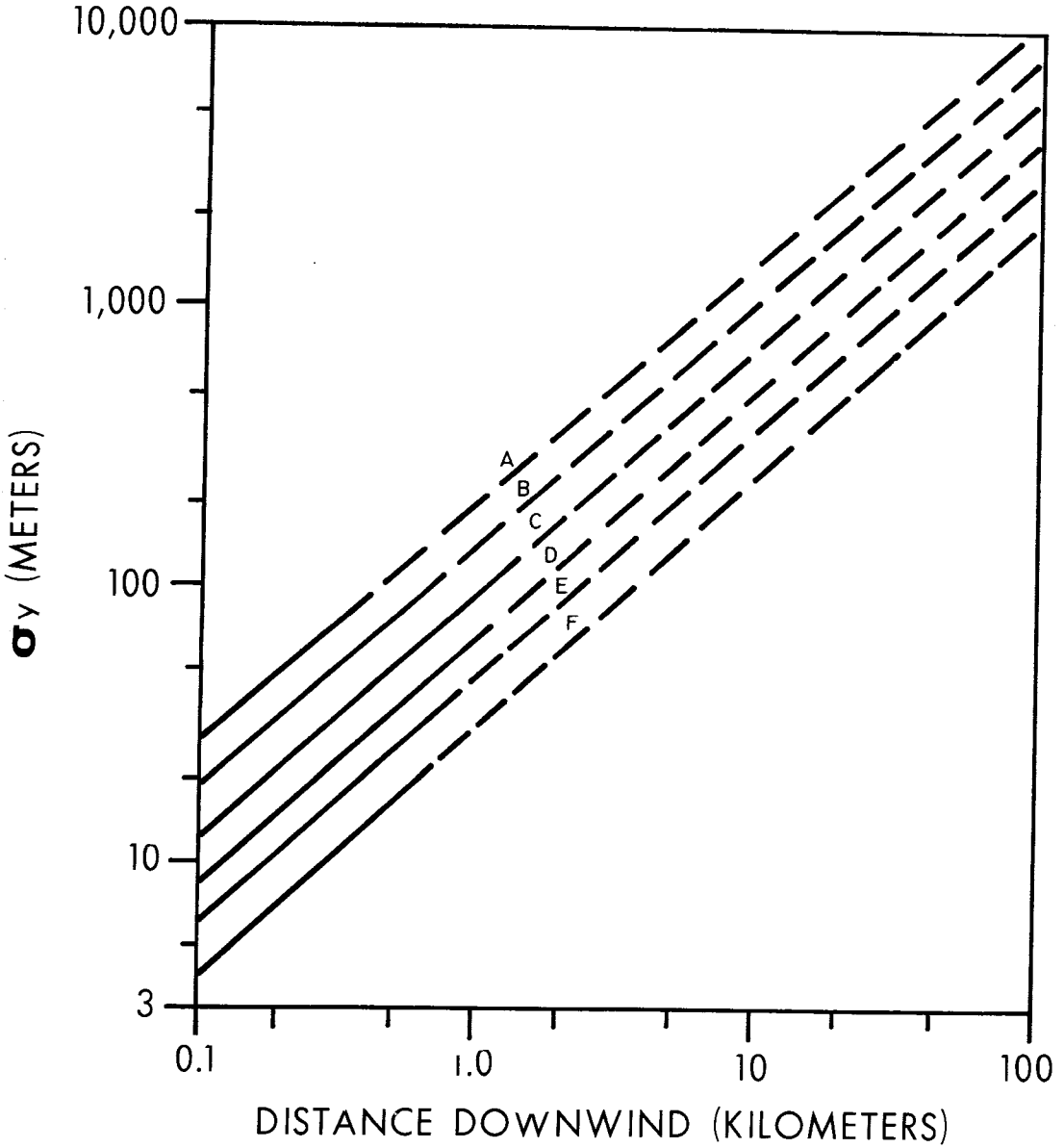

Mixing height, like stability is not routinely directly measured. In fact, for mixing height, a standard method of estimation has yet to be agreed upon [8]. We know such barriers exist, but we cannot be sure of the exact height or whether the barrier has holes in it. Sometimes the vertical flow of pollutants is merely slowed rather than being completely confined. Estimates of mixing depth are based upon vertical temperature soundings as obtained from weather balloons. Locations of these soundings are usually remote from urban areas. Such measurements do not reflect urban and other geographical abnormalities such as urban heat island or lake effects. These phenomena can dramatically influence the mixing depth. Most variants of plume and puff models assume the pollution is reflected back when it hits either the ground or the mixing lid barriers [10, 12]. Eventually these constraints cause the pollutant concentrations to change from the plume configuration into that of the evenly dispersed constant concentration of the box model as is illustrated on Figure 6.

Before proceeding, we want to say a little about Chicago's lake breeze. Lake Michigan or other bodies of water can have an important effect upon air quality [2]. Under certain conditions the lake appears to cause recirculation of our pollutants. Balloons released into an onshore or lake breeze rose, went opposite to the lake breeze, then descended and returned in the onshore breeze, then started to repeat the cycle as indicated on Figure 7. This means that the pollution can be blown away only to return again, sometimes several times in the same day. The dispersion equations do not account for this occurrence. Chicago experiences such conditions to some extent on about 60 percent of spring and summer days. This is a significant portion of the time, even on an annual basis.

Such modeling anomalies should be investigated in regions located near large bodies of water. The seemingly straightforward dispersion equations overlook the complexities of marine effects and unusual topography, as well as the aforementioned urban heat island. Any of these can significantly affect the dispersion of urban pollutants, and atmospheric scientists have been notably unsuccessful in modeling these abnormalities.

In contrast, background pollution levels can readily be incorporated into plume calculations. The incoming air is not clean. Incoming pollutants can be generated from either natural or from man made sources outside the region. Incoming pollutant levels can be measured at upwind region boundaries, and these concentrations can simply be added to the results of any dispersion calculations.

The question of pollutant decay is more complicated. The pollutants do not merely disperse, they do remove themselves from the atmosphere. If decay mechanisms did not exist, we would all have suffocated long ago. Pollutants are not inert. They do react and decay at varying rates. There is not, however, enough information to adequately address such problems in regional air quality dispersion models. If the area being modeled is small and wind speeds are high, the pollutants may be quickly blown out of the area without having time to react or decay. If, on the other hand, the area is large and wind speeds low, significant removal, decay, or alteration could occur.

Photochemistry is an obvious example. Photochemical oxidants are simply unfortunate intermediates along the generally beneficial decay path by which

FIGURE 6: Constrained Plume[12]

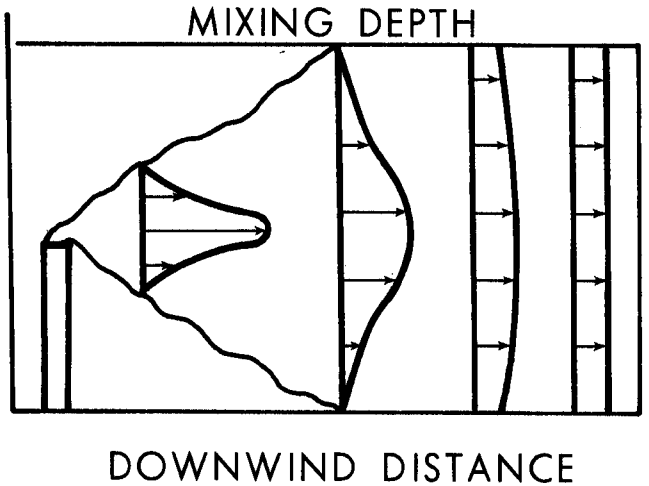

FIGURE 7: Pollutant Trajectory in a Lake Breeze[2]

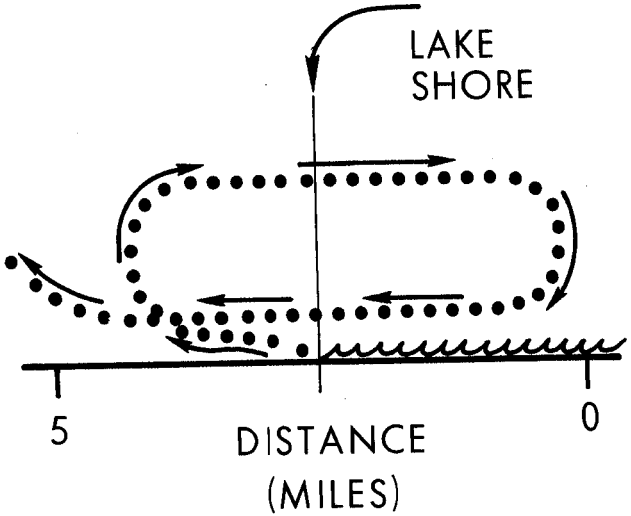

nature attempts to rid the atmosphere of nitrogen oxides and reactive hydrocarbons. Sometimes maximum oxidant concentrations are found 50 to 100 kilometers downwind of the precursor emission points. Because of the complex kinetics, modelers usually have much less success in predicting ambient levels of these pollutants than those for a relatively inert pollutant, such as carbon monoxide.

Even here, removal must take place, since no world-wide buildup of carbon monoxide is being observed despite the ever growing numbers of automobiles. Again, we have no easy answers except that one be aware of some of the risks involved in using models which do not include decay considerations.

Sometimes recirculation, pollutant decay, and background pollution are included by empirically calibrating a dispersion model. In this way a given set of input information can be forced to give the proper observed results even when all of the dispersion and decay mechanisms are not understood.

Models: Application and Verification

Having reviewed the basic types of models and having considered some of the problems of obtaining satisfactory input data, we will examine how well the models perform. Models have been used to simulate short term, that is hour to hour, as well as long term, or year to year, conditions. We present some short term comparisons, even though we strongly feel that one should largely restrict the use of presently available models to annual evaluations. Even here, problems remain. Unfortunately, more effort has been spent in developing models than in verifying them. When experimental verifications are attempted, it is much easier and less expensive to confine the verification monitoring to a short rather than to a long time period.

No one has yet attempted to maintain the extensive and intensive continuous three dimensional monitoring really needed to evaluate the long range reliability of urban dispersion models. A single station sampling at a single height definitely cannot do the job for the entire region, no matter how carefully its sampling probes are located. This problem of monitoring is a discipline in itself. Planners will most likely use data generated by others, and one should recognize the limitations of such data. Many agencies, including the federal EPA, have discovered that they have not always been measuring what they thought they had been measuring; sometimes the agonizing discovery is made years too late.

Now to some past attempts at verification. Application of the box model to an urban street canyon is a straightforward example [3]. The building walls clearly define the width of the box. Concentrations of carbon monoxide were measured at a mid-block location in St. Louis in 1971. On Figure 8, the solid lines represent the measurements and the dashed line, the calculated results. There is a significant variation of concentration with time. Some of the rush hour peaks are evident. For several of the peaks, the observed and calculated results coincide. However, large discrepancies are apparent. At some points the measured concentration is over three times the calculated concentration. There are several reasons for the relatively good agreement: the area being

FIGURE 8: Evaluation of Box Model[3]

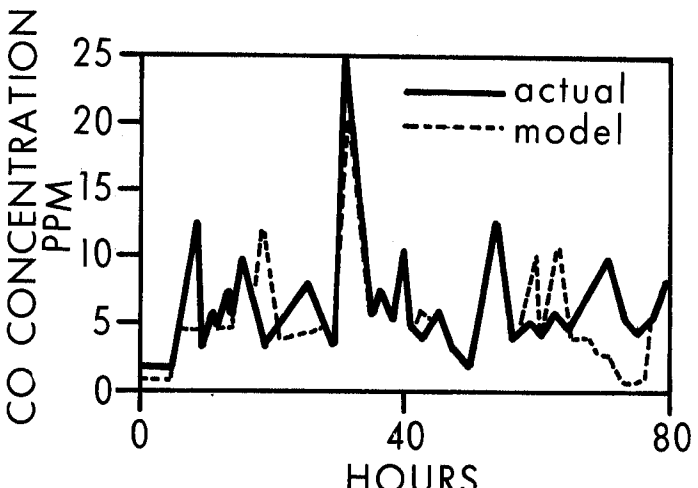

modeled is small. The geometry, that is the dimensions of the box, is definitely defined. Single continuous monitors for wind speed and carbon monoxide level adequately provided the input ambient data. There was no need to estimate stability and extent of plume dispersion. Also, emissions were very accurately estimated using traffic counts which were detailed enough to indicate hour by hour variations.

In another comparison, box models were applied to entire urban regions for yearly time periods [4]. For this situation,

$$C = K \frac{Q}{U\ A} \tag{3}$$

where

C = concentration

Q = emission rate

U = average wind speed

A = city area

K = proportionality constant.

Note that neither the city shape, the wind direction, nor the mixing depth are included in this extremely simple equation.

Both particulates and sulfur dioxide were studied for 29 USA cities in which calculated results using this equation were compared with ambient annual averages [4]. Some values for K are listed below:

	K Value Particulates	SO_2
Chicago	154	81
Los Angeles	205	--
Philadelphia	634	218
Pittsburgh	426	117
St. Louis	122	27
Detroit	155	5
Cleveland	57	16
Average	200	50

For sulfur dioxide the values of K vary from 5 to 218 with an average of 50. For particulate matter, the so-called constant varies from 57 to 634 with an average of 200. These averages are for all 29 cities, not just those shown above.

The variation in K between cities is high. However, the standard error is only ± 50 percent. This is not bad for a model which almost totally ignores the urban geometry and atmospheric variables. Admittedly, this work raises questions. Why are the constants different for the two pollutants? How repeatable are the results? In other words, what happened the following year? Did cities keep the same constant? Did the overall averages change? Despite the questions and the obvious limitations, this simple approach can sometimes deliver considerable useful information per man hour of effort. We should expect considerable improvement when the more sophisticated time-consuming plume and puff models are employed.

Now let us consider plume model performance. We will start again with short term results for St. Louis [10]. In this case, plume equations were used to predict the total contributions of highway and airport sources upon a single monitoring or receptor location. The pollutant is carbon monoxide, and about three days of observations in 1964 are shown on Figure 9. Again, some of the daily rush hours are quite apparent. Overall, the model obviously does not duplicate the observed conditions. For a few short periods of time the model and observations are in close agreement. At other times the model significantly deviates from observations. The errors are larger than those for the box model, but the source-receptor geometry being considered here is much more complex than in the straightforward urban canyon example.

Next we will consider long term plume model results. In urban situations, plume calculations are rarely used one at a time. Rather there are many sources and many receptors as well as continual variations in atmospheric conditions. The Air Quality Display Model, or AQDM for short, is a widely used computer simulation package by which present or future air quality can be estimated [6]. Within AQDM the various meteorological parameters are either entered or internally estimated; the variables are weighted and combined such that the model yields annual ambient air quality estimates at large numbers of preselected locations. AQDM is one of two methods sanctioned by EPA for use in predicting future air quality in the state-prepared implementation plans.

The dispersion model employed in AQDM is a simplified variant of the plume model described earlier. AQDM also needs values for mixing depth; these are estimated from stability information. High stability yields low mixing depth. Stability estimates are in turn derived from windspeed-cloud-cover relationships as described earlier.

AQDM then combines groups of short term meteorological measurements into weighted annual averages. In all, AQDM computes concentrations for each of 480 combinations of weather conditions; comprised of 16 wind directions, six wind speed classes, and five stability classes. The annual frequency of occurrence of each combination is then determined. Finally, the mean annual concentration is determined as the frequency weighted sum of concentrations for each set of conditions.

With this brief overview of AQDM, let us review another comparison of computed versus measured results. Sulfur dioxide concentrations in Chicago have been calculated using AQDM [5]. If AQDM precisely predicted the observations, the

FIGURE 9: Evaluation of Plume Model[10]

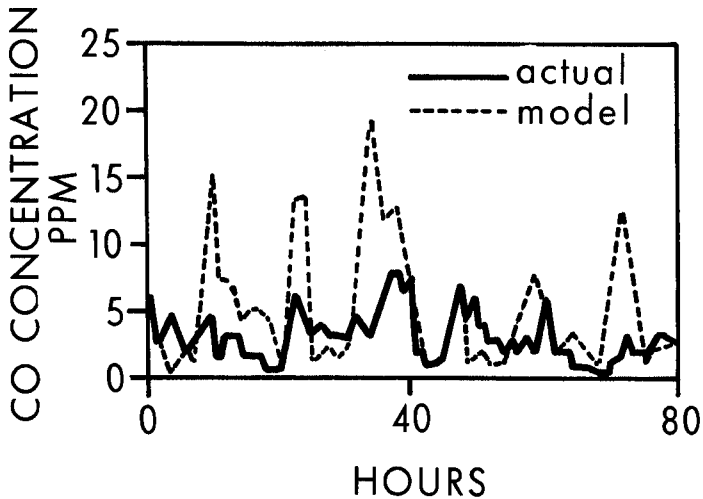

points would lie on the 45 degree line on Figure 10. Very few of the points do. In the extreme, at point A, the model calculated a concentration of 500 for an observation of less than 100. We noted this same sized error on occasion when the standard plume model was used for a short term comparison.

AQDM does not give up here. The next step is calibration. Ideally, a straight line or simple curve could be fitted which passed through or close to each of the data points. A linear calibration line for the Chicago data is also shown on Figure 10. In mathematical terms, the equation for this line is:

(4) Observed concentration = 32 + 0.26 (Calculated concentration)

Note that 32 is the intersection with the vertical axis. This point represents the concentration in the air when emissions are zero, in other words, the background concentration. So far, so good; one would expect to have to add in a background or incoming concentration to the plume calculation results.

Unfortunately, this regression-derived calibration line, with its correction for background concentration and whatever else, still only explains 27 percent of the variation between the observed and calculated concentrations. In fact, some data points lie closer to the rigorous 45 degree line than to the calibration line.

Yes, overall agreement is increased a little by the calibration correction. For example, at point B a calculation of 200 is revised to 80, but in this vicinity, observed concentrations vary from 20 to 150. No single calibration line can correct for this kind of variation. The accuracy of AQDM, even after calibration, is about the same as that for the calibrated box model or for the short term plume model.

AQDM does have at least one real advantage. It automatically translates annual average concentrations into the higher maxima expected for shorter time periods. You can get an automatic indication of how your plan relates to once a year maxima for one hour or for other short term periods.

This ability to translate from annual averages to short term maxima tends to support our recommendation that the models be used to assess annual air quality. These statistical techniques indicate that when the annual average level of a pollutant is kept below a certain level, that pollutant concentrations for shorter periods of time will not likely exceed certain higher levels. Thus a low annual average concentration tends to insure that a once a year maximum for one hour or other time period is being achieved. Also note that the best data available for use in models are usually of an annual nature. Determining meteorological or emission hourly or daily frequency distributions is seldom practical. Even annual averages show dramatic variations from year to year.

So much for plume models. The puff model represents a still higher level of sophistication. Is it worth the extra time consuming complexity? You probably can guess the answer. The puff model was the one which emitted

FIGURE 10: Evaluation of AQDM[5]

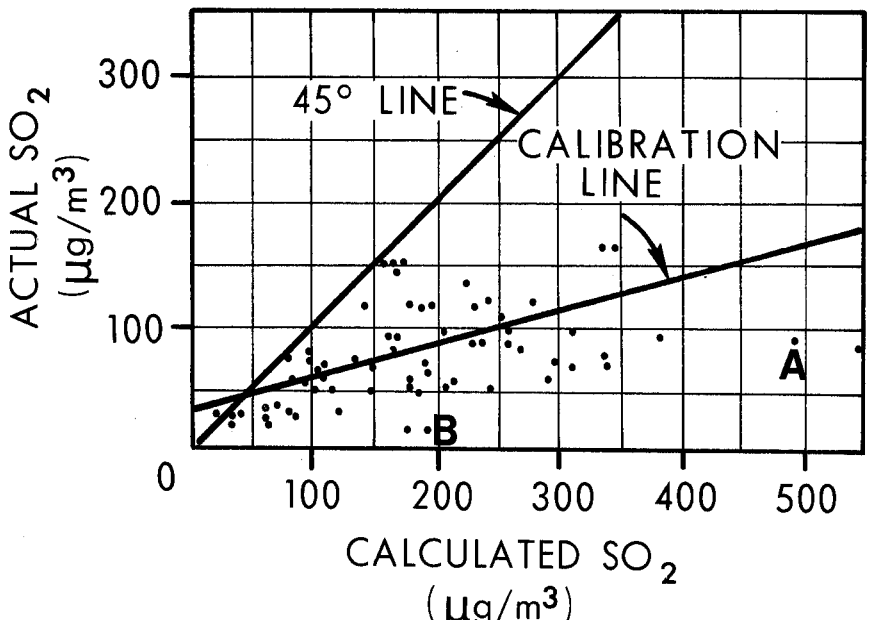

pollutants in discrete bundles which could be made to respond to conditions downwind from the stacks. Clearly, this approach is the more rigorous. For the sake of brevity, let us compare both the plume and the puff results with actual observations. Figure 11 provides a comparison using sulfur dioxide concentrations obtained from a Chicago monitoring station [9]. The puff model seems to incorporate the same flaws as the plume model. The two models agree with each other better than with the observations.

A similar comparison at another Chicago monitoring station is presented on Figure 12 and indicates that the puff model came closest to the daily maximum, but it overestimated just previous to the maximum [9]. Overall, it is difficult to say which model comes closest to the observed results, but based upon this extremely limited evidence, there presently seems little real advantage of the puff model over the less complex plume model. Perhaps the situation will change when we can obtain better time dependent emission data and urban meteorology data at more locations, but for now there seems little justification to warrant use of the puff model. To prove the point, Argonne National Laboratory, developer of the puff model, presently relies almost exclusively on the AQDM alternative.

Large errors remain whichever model is used, but in fairness to both the plume and puff models, it should be noted that the time periods used in the comparison are very short. The agreement with observations seems to indicate that although we do not have a complete understanding of urban air pollutant dispersion, the models often predict observed conditions.

We could not justify the time consuming complexity of the puff over the plume model. So, if simplicity is a virtue, why not go all the way and employ the box model exclusively? Clearly the box model breaks down when it comes to large point sources. As shown on Figure 13 the box model gives a constant concentration everywhere, while the plume model would yield a gaussian distribution.

Note that these differences would decrease as the time period increases, because during the course of a year, in most locations, wind directions would vary by 360 degrees. Likewise, windspeeds, stabilities and mixing depths would also be expected to vary markedly. When AQDM weights and sums all the 480 meteorological combinations, in some situations the results can very well resemble the crude box model approximation.

EPA recognizes this situation. Remember, we noted that AQDM is one of two sanctioned methods for predicting future air quality; the other method, called "roll-back," is to simply assume that any reduction in emissions would be immediately reflected as a directly proportional reduction in ambient pollutant levels, all without consideration of source receptor geometry or the urban meteorology. This conclusion can be derived from the box model (Equation 3) with everything held constant except C and Q. Any reduction in the emission term (Q) is directly reflected in the ambient concentration term (C).

FIGURE 11: Evaluation of Puff and Plume Models: I[9]

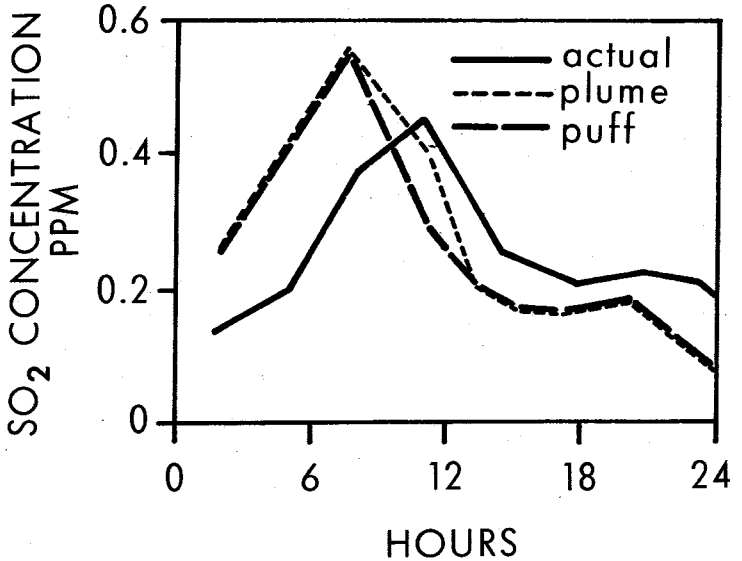

FIGURE 12: Evaluation of Puff and Plume Models: 19

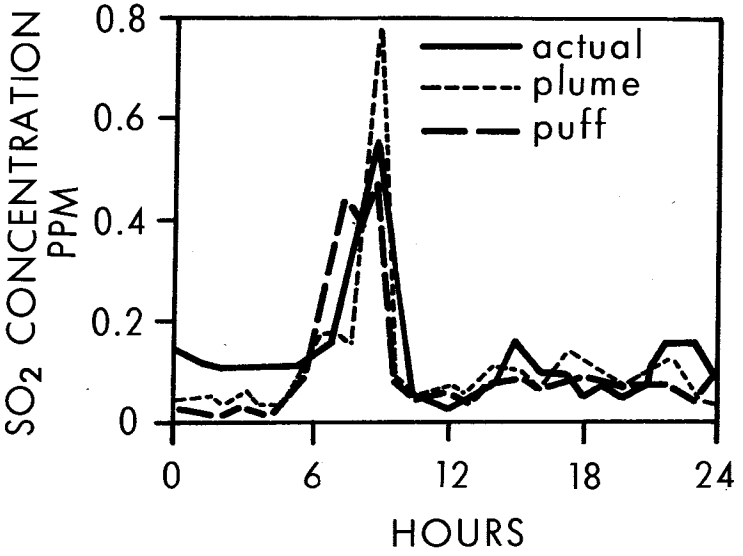

FIGURE 13: Comparison of Box- and Plume-Model Concentrations

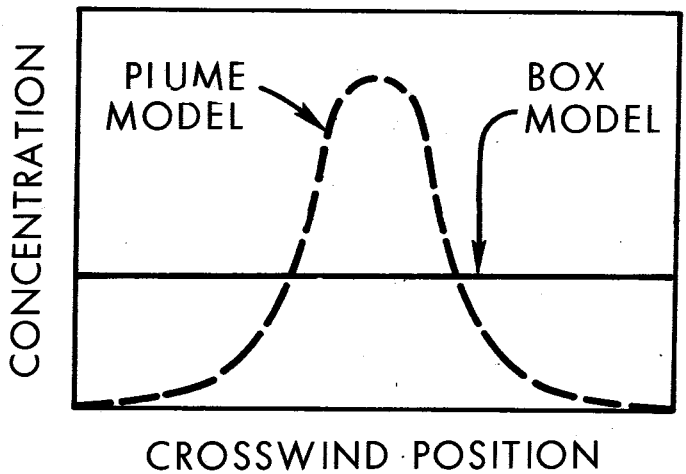

Conclusion

Our inability to identify an always accurate model leaves us facing quite a dilemma. Clearly, a useful and often cost effective way to manage air quality is to segregate sources from receptors through judicious land use control. However, we have serious reservations as to whether we presently have the tools to adequately define how far from, and in what direction, receptors should be located from sources.

Our concerns lie not so much with the models, but with the data which goes into them. Let us return to this calibration procedure. In actuality it is invariably necessary to calibrate all the model types, whether box, plume, or puff. Even if the calibration procedure worked, we would have no idea what was at fault. It could involve errors in anything we have discussed: the windspeeds or directions, mixing heights, stabilities, plume rise, background concentrations, recirculation, pollutant degradation, emission strengths, all in addition to any shortcomings in the models themselves.

Particularly disconcerting would be a differential error involving the handling of different kinds of emissions. For example, in Chicago, particulates emanate from large point sources with high stacks and in much smaller amounts from coal burning furnaces in apartments and commercial buildings which have low stacks. Despite the much lower emission rates, AQDM studies indicate that it is the coal burning apartments and commercial buildings which are chiefly responsible for Chicago's high ambient particulate levels. This apparent self pollution phenomenon has led the state and federal environmental officials to propose that residential commercial coal burning be banned in Chicago [1]. We do tend to believe the results generated by AQDM; but a lake breeze, or an urban heat island, or whatever, could be coloring the results, say by understating the contribution of the coal burning power plants with their high stacks. The calibration of AQDM would simply mask such an error.

There are now models being developed which, instead of mdeling a region as a single unit, divide the region into many cells. Such a model should have superior performance over those now in use. However, a problem with the input data still remains. This type of model requires very detailed data for each cell including three dimensional wind field components. Even if such a model could exactly duplicate observed conditions, no one is routinely collecting the necessary data. A model such as AQDM makes use of data which is readily accessible and that has been routinely collected for many years.

The most sensitive variable in plume and puff models is stability. Small changes in stability cause big changes in plume dispersion behavior. Unfortunately, this is the most difficult variable to quantify, particularly in the presence of urban anomalies. If the situation is deemed hopeless, one must revert to the rollback method and forget about optimizing source receptor relationships.

We are not quite that pessimistic. Both box and plume models can be useful. When used appropriately for long term assessment of air quality, one can have at least some confidence that the models can be accurate within a factor of

two of actual air quality. When model results indicate that a given strategy will produce air quality benefits in excess of that amount, that is, if the proposed strategy would reduce pollutant levels by more than one-half, one can proceed to a cost benefit analysis with considerable confidence. For smaller reductions, one takes his chances.

REFERENCES

1. A. S. Cohen, G. Fishelson and J. L. Gardner. Residential Fuel Policy and the Environment, Ballinger Publishing, 1974.

2. H. S. Cole and W. A. Lyons. The Impact of the Great Lakes on the Air Quality of Urban Shoreline Areas, University of Wisconsin-Parkside, 15th Conference on Great Lakes Research, International Association for Great Lakes Research, Madison, Wisc., 1972.

3. W. F. Dabberdt and F. L. Ludwig, An Urban Diffusion Model for Vehicular Pollutants, Stanford Research Center, 2nd Urban Technology Conference, San Francisco, California, 1972.

4. F. A. Gifford and S. R. Hanna. "Modelling Urban Air Pollution," Atmospheric Environment, Vol. 7, (1973) 131-136.

5. A. S. Kennedy, A. S. Cohen, et al., Air Pollution-Land Use Planning Project. Phase I-Final Report, Argonne National Laboratory, Publication No. ANL/ES-7, 1971.

6. National Air Pollution Control Administration, Air Quality Display Model, Publication No. PB189-194, 1969.

7. A. T. Rossano, Air Pollution Control Guidebook for Management, Stamford, Conn.: Environmental Science Service Division, E.R.A., Inc., 1969.

8. D. M. Rote, J. W. Gudenas and J. Anderson, A Comparison of Two Methods for Estimating the Mixing Depths Over Urban Areas, Argonne National Laboratory, Publication No. 71-95, 1971.

9. D. M. Rote, J. W. Gudenas and L. A. Conley, Studies of the Argonne Integrated-Puff Model, Argonne National Laboratory, Publication No. ANL/ES-9, 1971.

10. A. C. Stern, ed. Proceedings of Symposium on Multiple-Source Urban Diffusion Models, Environmental Protection Agency, Publication No. AP-86, 1970.

11. O. G. Sutton, Micrometeorology, New York: McGraw Hill, 1953.

12. D. B. Turner, Workbook of Atmospheric Dispersion Estimates, National Air Pollution Control Administration, Publication No. AP-26, 1967.