AgEcon SEARCH
RESEARCH IN AGRICULTURAL & APPLIED ECONOMICS

The World's Largest Open Access Agricultural & Applied Economics Digital Library

This document is discoverable and free to researchers across the globe due to the work of AgEcon Search.

Help ensure our sustainability.

Give to AgEcon Search

AgEcon Search
http://ageconsearch.umn.edu
aesearch@umn.edu

*Papers downloaded from **AgEcon Search** may be used for non-commercial purposes and personal study only. No other use, including posting to another Internet site, is permitted without permission from the copyright owner (not AgEcon Search), or as allowed under the provisions of Fair Use, U.S. Copyright Act, Title 17 U.S.C.*

Budget Allocation for Rural Agricultural Development in the NWP: A Multiple Criteria Analysis

By

van der Merwe, JD; Cloete, PC & van Schalkwyk, HD

Contributed Paper presented at the Joint 3rd African Association of Agricultural Economists (AAAE) and 48th Agricultural Economists Association of South Africa (AEASA) Conference, Cape Town, South Africa, September 19-23, 2010.

Budget Allocation for Rural Agricultural Development in the NWP: A Multiple Criteria Analysis

JD van der Merwe[1], PC Cloete[2] & HD van Schalkwyk[3]

Corresponding author: J.D. van der Merwe
e-mail: 22709029@nwu.ac.za
tel no: 018 299 2373
073 1402 698

[1] School for Environmental Sciences and Development, Potchefstroom Campus, North West University
[2] School for Environmental Sciences and Development, Potchefstroom Campus, North West University
[3] Rector of the Potchefstroom Campus, North West University

Abstract

In the light of past development failures, coupled with the pressure on government to deliver on their promises made, a framework is needed to improve the success of rural agricultural development. Consequently, detailed agricultural development plans were drafted with the intent to provide a framework or roadmap that will enable small-scale farmers to be more successful over the long term. However, development plans can only improve the success of agricultural development once they are implemented. This conveys another dimension of agricultural development, with government that is often faced with strict budget constraints. Budget allocations to agricultural development initiatives should therefore be done in a way that will yield the highest economic, social and environmental returns. Such a decision can become extremely complicated when in search of optimal allocation of limited budget resources. Consequently, a decision support system that will guide budget allocation for agricultural development initiatives is sorely needed. This article provides a framework on how multiple-criteria analysis can be used as a decision support tool that will ensure optimal budget allocation for agricultural development.

1. Introduction

Large amounts of taxpayers' money have been invested in agricultural development initiatives in South Africa; but unfortunately most of them have not been successful. This has increased pressure on government departments to deliver on their promises made, as more and more productive agricultural land has been virtually taken out of production. Besides, most of the past development initiatives have simply become poverty traps, which has added to the economic hardship already experienced by most people in the rural regions of the country (Cloete, 2010).

Several authors including Eicher (1999), Magingxa and Kamara, (2003), Poulton, Kydd and Dorward (2006), as well as Magingxa, Alemu, and Van Schalkwyk (2009) suggested that a lack of adequate skills and knowledge, access to inputs and market information, credit availability, inadequate extension services and insufficient training can be held responsible for past development failures. In addition to this, Nel and Davies (1999) consider droughts, lack of

access to land, shortage of funds, limited access to external markets, failure to penetrate established markets and insufficient marketing as restraining factors towards the success of agricultural development in South Africa. Thus, one might conclude that the failure of past agricultural development initiatives revolve around human, institutional, infrastructure and natural resource endowments, with most of these factors being interrelated. Munro (1999) was of the same view, suggesting that most factors that inhibit agricultural development are integrated.

The United Nations (2002) suggested that in order to address interrelated factors that inhibit development, a co-ordinated response that draw on the strength of all stakeholders is needed. This requires putting in place a framework that incorporates appropriate policies, institutions and the mobilising of resources at the national, provincial and regional levels (United Nations, 2002).

According to Magingxa (2006), the formulation of workable development plans/ projects can serve as a means to address the interrelated factors that inhibit agricultural development. In other words, the formulation of development plans can provide a guideline that will incorporate policies, institutions and mobilise resources to a degree that will improve the success of agricultural development. The AgMRC (2010) made a similar observation, suggesting that development plans could improve the success of agricultural development if it provides a "blueprint" on how to create a viable business enterprise. Magingxa (2006) elaborated by arguing that development projects will ensure better governance and monitoring, which will consequently result in higher levels of success.

However, workable development plans can only address the factors inhibiting agricultural development once they are implemented. This conveys another dimension of agricultural development, with government that are often faced with strict budget constraints. For example, only 3.66% of the total budget available to the relevant study area is destined for agricultural development.

Therefore, with retrospect to government that's already under pressure to deliver on their promises made, budget allocations to agricultural development initiatives should be done in a way that will yield the highest economic, social and environmental returns. Such decisions can

become extremely complicated, especially when in search of optimal allocation of limited resources.

With aforementioned in mind, a decision support system that will guide budget allocation for agricultural development initiatives is sorely needed. This article will provide a framework on how multiple-criteria analysis can be used as a decision support tool that will ensure optimal budget allocation for agricultural development. The North West Province (NWP) is used as a case study to illustrate the potential of the model.

In order to illustrate how multiple-criteria analysis could be used by government to ensure optimal budget allocation, the article will start with a background i.e. the region and the development of agricultural development plans for the selected region. This will be followed by a discussion on the model framework – algorithms and criteria development, with the fourth section that will deal with the results. The article will conclude with a summary of the results whereupon recommendations will be made

2. Background to the case study

The rural regions of the NWP accommodate approximately 65% of its inhabitants and the majority of these people are faced with severe economic and socio-economic challenges. Cloete, Van Schalkwyk and Carstens, (2009) reported that 41 out of every 100 people in the province is economically dependent. However, the rural nature and diverse natural resource base of the province provide significant opportunities for agricultural development, which can assist in improving the economic hardship experienced by many in the province. Based on this, the North West Government has emphasised the importance of successful rural agricultural development as a mechanism to improve the welfare of the province. In an attempt to co-ordinate agricultural development efforts, development plans were drafted to guide and assist small-scale farmers in the province. The intent of these plans is to provide a framework or roadmap that will enable small-scale farmers to be more successful in the long run.

In order to identify potential workable development plans for the NWP, SWOT analysis workshops was held in each of the local municipalities. This was done to obtain a better perspective of the potential opportunities as well as factors inhibiting agricultural development in the province. A total of twenty one SWOT analysis workshops were held throughout the province. These workshops were structured in the form of panel discussions for all role-players in the private/commercial agricultural sector, followed by workshops for role-players from the public sector. In general, the SWOT analysis workshops were attended by representatives from organised agriculture, farmer's unions, cooperatives, input suppliers, banks, government officials, NGO's, commercial and small-scale farmers, etc. The sessions were guided by a discussion leader who orchestrated the discussion according to the SWOT methodology. From this, potential agricultural opportunities and factors inhibiting agricultural development were identified. This information was then used to identify potential agricultural development plans. Following the identification of potential opportunities, detailed plans were drafted to provide a framework or roadmap for small-scale farmers to successfully explore each of these opportunities.

The development plans that were identified and developed for the different regions of the NWP include a goat and cow milk hotel, goat and beef production, broiler outsourcing scheme, animal feed enterprise, eco-tourism, grain and vegetable production. In addition, investment in veldt management practices was recognised as an alternative development initiative that could improve the success of agricultural development in the province.

3. Methodology

Hajkowicz (2006) highlighted that when considering conflict analysis there are mainly four economic evaluation frameworks available which include: the cost benefit analysis (CBA), cost effectiveness analysis (CEA), cost utility analysis (CUA) as well as the multiple criteria analysis (MCA). According to Hajkowicz (2006), the process of selecting the most appropriate framework will depend largely on the valuation of benefits. If benefits are adequately measured

in monetary units, then BCA provides an appropriate framework. If not, the analyst will need to contemplate CUA or non-market valuations (NMV).

MCA are likely to be the most suitable framework if there is no monetary cost data available to rank decision upon (Hajkowicz, 2006). Marinoni, Higgins & Hajkowicz (2008) were of the same view, arguing that MCA is an evaluation framework which can be used to rank or score the performance of decision options e.g. policies, projects, locations etc. against multiple objectives in different units. Therefore, based on this, a MCA model was developed to rank the identified development plans for the NWP.

3.1 Model

A wide variety of MCA methods can be used to obtain the final ranking or scoring of the decision option. A comprehensive review of all the possible MCA methods that could be used to rank decision options can be found in Figueira, Salvatore, & Ehrgott (2005). However, Hajkowicz (2006) suggests that the most common MCA methods are the Analytic Hierarchy Process (AHP), weighted summation, ELECTRE, PROMETHEE, ORESTE and Compromise Programming. Moreover, the studies by Gershon and Duckstein (1983); Ozelkan and Duckstein (1996); Eder, Duckstein & Nachtnebel (1997); Raju, Duckstein & Arondel (2000) as cited by Hajkowicz (2006) revealed that changes in the method can change the result, although the differences are usually minor.

However, in an attempt to bridge the gap between the different MCA methods, Van Huylenbroeck (1995) combined the principles of the ELECTRE, PROMETHEE and ORESTE. Van Huylenbroeck (1995) referred to this new MCA method as the Conflict Analysis Method (CAM). The CAM is based on a more general formulation, combining the basic notions of indifference, incomparability and strong preference from the ELECTRE, the different types of preference functions from the PROMETHEE and the PIR-test from the ORESTE approach. As a result, Van Huylenbroeck (1995) bridges the gap between the different MCA approaches by combining the strengths and eliminating their weaknesses. Therefore, the CAM approach could be regarded as the most appropriate method to apply when solving conflict decisions.

In order to conduct the CAM, preference indicators have to be calculated for each pair of alternatives. Assuming alternatives *a* and *b*, let $e_j(a)$ and $e_j(b)$ be the preference scores for alternative *a* and *b* respectively. This can be defined as follows in its general form:

$$P(a,b) = \frac{1}{n}\sum_{j=1}^{n} g_j[e_j(a,b)]$$

With:

$$e_j(a,b) = e_j(a) - e_j(b) \quad if \quad e_j(a) > e_j(b)$$
$$= 0 \quad if \quad e_j(a) \leq e_j(b)$$

g_j = Weight factor for criteria j

n = Total number of criteria

The preference indicator P(a,b) measures the degree of dominance of *a* over *b* and likewise P(b,a) measures the degree of dominance of *b* over *a*. The degree of dominance *P(a,b)* is a function of both the difference in the evaluation score and the relative importance of the criteria for which *a* is judged to be better than *b*. The preference score for a criterion is measured along a preference curve, transforming the difference in evaluation scores into a preference between 0 and 1. According to Van Huylenbroeck (1995), six different kinds of preference functions can be used depending on the available data. These preference functions include the 0-1 criterion, 0-1 criterion with indifference area, multilevel criterion, linear criterion, rank order criterion and the Gaussian criterion

The 0-1 and multilevel criterion was found to be sufficient for the purpose of this study. The 0-1 criterion is the usual used in the PROMETHEE approach. This criterion is characterised by an infinite discriminating power. Any difference in score immediately implies a total preference. The multilevel criterion is an extension of the so-called pseudo criterion (Roy, 1985). The level of dominance in the pseudo criterion depends on the interval in which the difference in evaluation scores is situated (Van Huylenbroeck, 1995).

The comparison of both preference indicators makes it possible to determine the degree of conflict between the two alternatives. However, in order to determine the exact relationship between the two alternatives, a PIR test is introduce. The PIR test incorporate indifference and incomparability threshold in order to distinguish between preferences. A schematic presentation of the PIR sensitivity test can be found in Van Huylenbroeck, (1995).

3.2 Development of criteria

Balyamujura (1995) suggested that the basic aim of the multiple criteria analysis is to rank the actions that can be taken to solve a problem to which several alternatives but conflicting choices exist. The ranking is based on set goals or criteria. Moreover, Fischer, Granat and Makowski, (2010) suggest that when evaluating the performance of alternative choices (i.e. development plans), often the specification of a single objective function does not adequately reflect the preferences of decision makers. Fischer *et al.,* (2010) elaborated by suggesting that when decision makers deal with practical resources complexities, their preferences are normally of a multi-objective nature, therefore, all factors impacting on agricultural development in the NWP need to be considered when developing a multi-objective MCA model.

Considering the preferences of decision makers in the NWP to improve sustainable agricultural development i.e. improve welfare of the community and at the same time conserve the province for future use, a MCA model was developed that depicted a trade-off between economic, environmental and social factors. Within the background of budget constraints, it is of utmost importance for government that agricultural development should be conducted in a sustainable manner if they are to deliver on their promises made.

The Chair in International Agricultural Marketing and Development (CIAMD, 2001) reported that in order to determine the optimal trade-off between the economic, environmental and social objectives, the following criteria need be considered:

- Economic benefits to the province. This can be analysed in terms of the amount of jobs that is created, income generated, and the contribution of the specific plan to the geographical product.
- The Long term sustainability of the project in terms of its economic-, environmental- and social sustainability.
- The future prospects of each plan, taking into account its economic growth potential, potential for future replication and adaptability to change.
- The degree of local resource utilisation, considering the use of existing state assets, use of local resources, use of external resources and degree of institutional self-reliance.

The abovementioned criteria, which are to be optimised in order to attain an increase in welfare, are listed in Table 1. The respective rank order illustrating the priority level of each criterion is also included in Table 1 (see scenario 1). In addition, scenario 2 (as depicted in Table 1) reflected on changed levels of importance for the respective criteria. This is to illustrate the sensitivity of the importance levels. The listed criteria were used to evaluate the different alternatives and to determine the best development plan under the set objectives i.e. improved welfare and conservation of the province for future use.

Table 1: Rank order of goals or criteria (level of importance)

Goals or criteria	Rank (Scenario 1)	Rank (Scenario 2)
Job creation	1	1
Income generation	1	2
Economic sustainability	1	2
Social sustainability	2	2
Environmental sustainability	2	2
Adaptability to change	2	3
Use of local resources	2	3
Contribution to GGP	3	1
Potential for replication	3	4
Degree of institutional support	3	3
Economic growth potential	4	1
Use of external resources	4	4
Use of existing state assets	5	5

4. Results

Findings from the SWOT analysis workshops were used to award the most appropriate values to each development plan (see Table 2). Values were awarded depending on the priorities of decision makers, which in this case reflect on the improvement of the welfare of the communities and the conservation of the province for future use. The development plan most likely to achieve the set objectives were rewarded the highest value (100), with the remainder of the development plans that was rated accordingly. For example, it was suggested that in terms of job creation (which form part of economic benefits), ET (2.4) is least likely to contribute towards the satisfaction of the objective with VP (100) being the most likely (see Table 2).

In addition, the weights awarded to each criterion that was used to rank the development plans are also shown in Table 2. These weights have been calculated based on the equation described by Van Huylenbroeck (1995). On the basis of a uniform distribution of weights, it can be proved

that the expected average value of the weights fulfilling the conditions imposed by the ordinal rank is given by the following equation:

$$g_j = \sum_{i=k}^{n} \left(\frac{1}{i}\right)$$

With:

k = priority level or ranking of criterion j (with k = 1 for the most important and k = n for the least important criterion).

The results obtained from the multilevel type preference function are shown in Figure 1. However, results obtained can be sensitive to modifications to either the criterion scores, ranking of the criteria or nature of preference function used. Subsequently, sensitivity of modifications to above mentioned factors can be illustrated using the following:

- Changing the preference function from the multilevel criteria to the 0-1 criteria and
- by changing the rank order (weights) of the criteria (shown in Table 1)

The results of the sensitivity test can be seen in Figure 2 and 3 respectively. In the CAM a value of 3.5 is applied for β, 7.5 for C* and values of 5 and 1 for $u1$ and $u2$ respectively.

Table 2: Data for comparison of the different business plans

	Weight	Priority ranking	**GH**	**MCH**	**GM**	**B**	**BP**	**AF**	**ET**	**VM**	**TIS**	**VP**	**GP**	**PC**
Job creation	0.1493	1	20.0	19.0	28.6	19.0	48.6	19.5	2.4	47.6	81.0	100.0	95.2	19.0
Income generation	0.1493	1	71.4	71.4	71.4	63.4	71.4	71.4	100.0	71.4	52.7	56.7	83.7	94.2
Contribution to GGP	0.0498	3	12.1	30.2	52.1	7.9	32.6	41.4	0.7	0.4	100.0	41.7	45.2	7.0
Economic sustainability	0.1493	1	60.0	80.0	100.0	80.0	100.0	60.0	60.0	80.0	60.0	80.0	40.0	40.0
Social sustainability	0.0746	2	42.9	57.1	71.4	100.0	85.7	71.4	85.7	71.4	85.7	85.7	100.0	85.7
Environmental sustainability	0.0746	2	75.0	75.0	100.0	60.0	60.0	20.0	100.0	75.0	27.3	21.4	20.0	20.0
Economic growth potential	0.0372	4	75.0	75.0	100.0	75.0	100.0	75.0	100.0	100.0	100.0	100.0	75.0	75.0
Potential for replication	0.0498	3	57.1	57.1	100.0	71.4	85.7	57.1	57.1	100.0	57.1	85.7	57.1	57.1
Adaptability to change	0.0746	2	66.7	66.7	100.0	50.0	100.0	100.0	50.0	100.0	66.7	100.0	100.0	100.0
Use of existing state assets	0.0299	5	20.0	20.0	10.0	10.0	10.0	20.0	10.0	30.0	100.0	40.0	20.0	20.0
Use of local resources	0.0746	2	85.7	85.7	100.0	85.7	100.0	100.0	71.4	100.0	85.7	100.0	100.0	100.0
Use of external resources	0.0372	4	75.0	75.0	75.0	62.5	87.5	62.5	100.0	62.5	75.0	87.5	62.5	62.5
Degree of institutional support	0.0498	3	2.5	1.0	0.6	3.8	0.9	0.7	48.5	100.0	0.3	0.7	0.7	4.4

With GH = Goat Hotel, MCH = Milk Cow Hotel, GM = Goat Meat, B = Broilers, BP = Beef Production, AF = Animal Feed, ET = Eco-Tourism, VM = Veldt Management, TIS = Taung Irrigation Scheme, VP = Vegetable Production, GP = Grain Production, PC = Perennial Crops.

Figure 1 reflects on the ranking of the different development plans according to their potential to address the set objectives i.e. welfare improvement of the community and the conservation of the province for future use. The ranking was done by means of a multilevel preference function. From this, VP, VM, BP and GM are ranked as the best alternatives, followed by GP and the TIS. Although the remaining six alternatives are on the same level, EC, B and MCH is preferred over PC, AF and the GH.

It is evident from Figure 1, that the multilevel preference function approach alone does not give a clear representation of which development plans is more likely to fulfil the objectives of decision makers in the NWP.

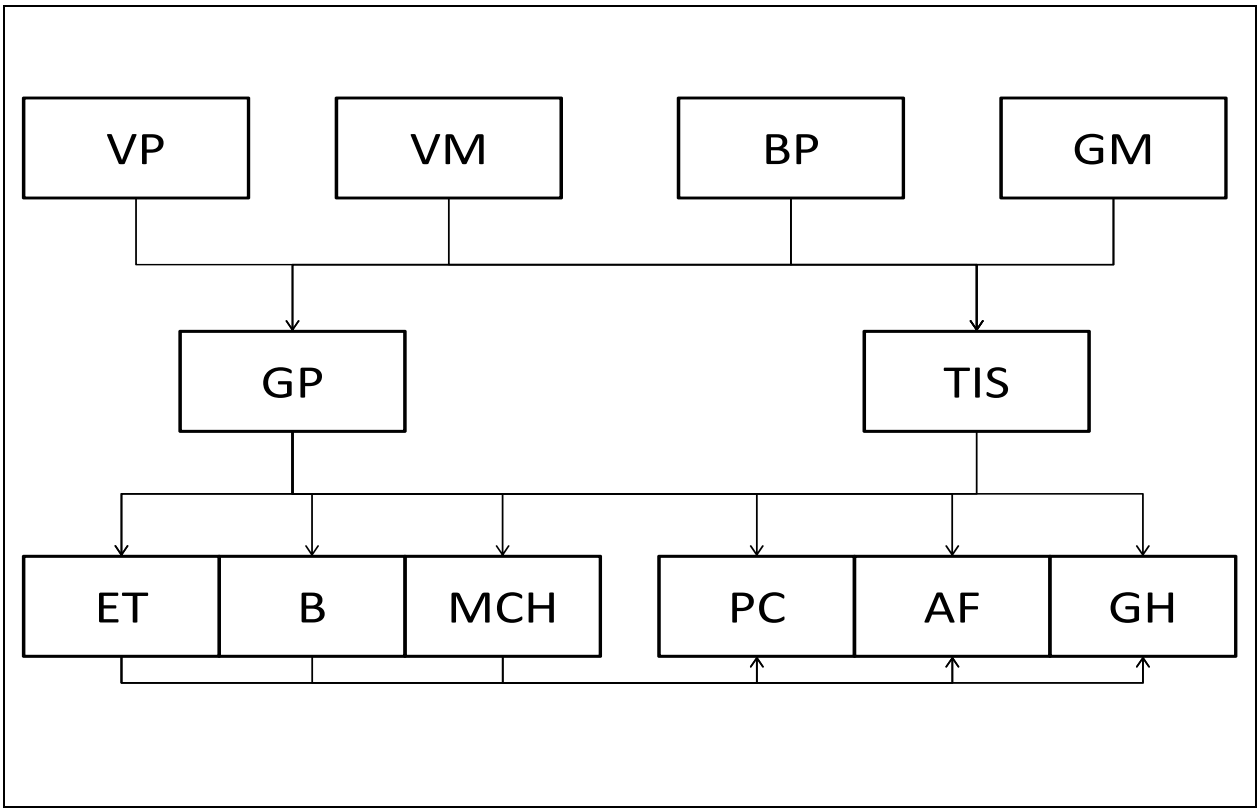

Figure 1: Rank order 1 (multilevel preference function)

Figure 2 reflects on the results of a changed preference function. These results were obtained by changing the multilevel preference function to that of the 0-1 preference function. The results also reflect the sensitivity of the change in preference functions. The change of the preference function yielded better results, with a clearer picture of which development plan is most likely to

achieve the set objectives. From Figure 2, it is evident that BP is most likely to achieve the set objectives, followed by GM, VP and VM. ET is believed to be the least likely to improve the community's welfare and to conserve the province for future use.

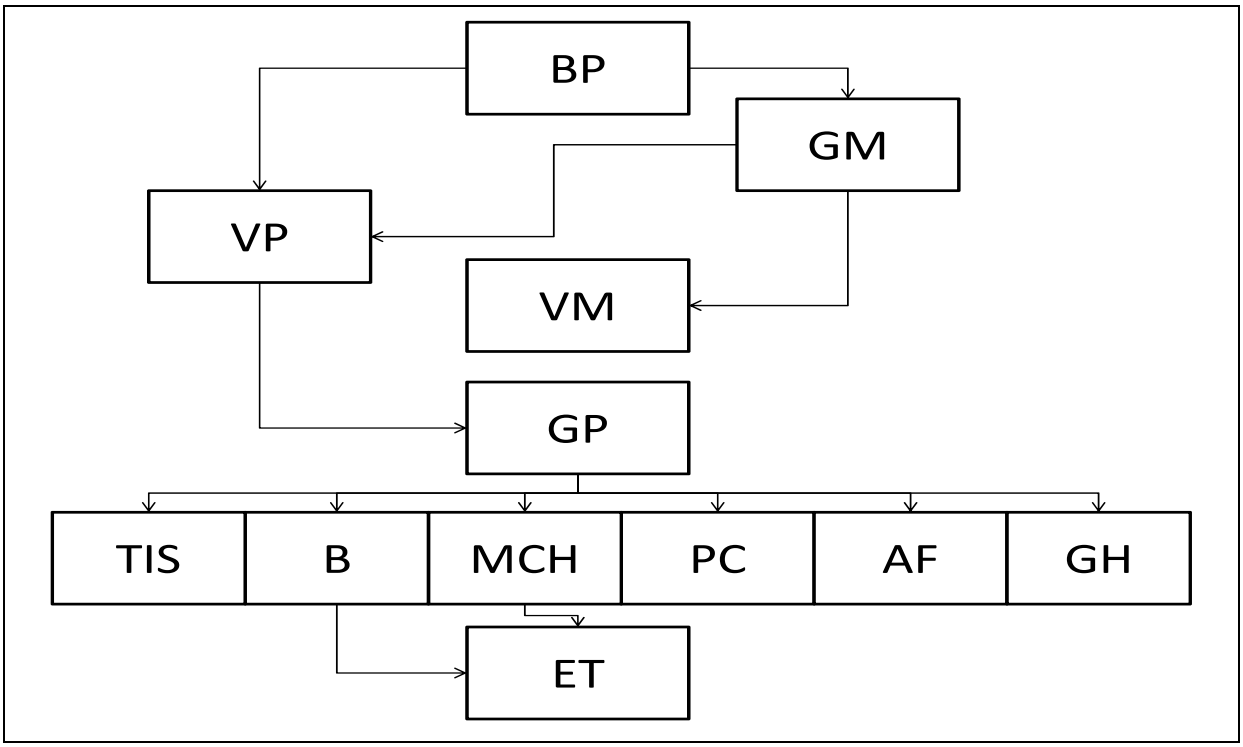

Figure 2: Rank order 2 (0-1 preference function)

Figure 3 show the result for a change in the ranking of the weights (see Table 1, scenario 2). It is evident from Figure 3 that the change in the weights of the criteria has a significant impact on the ranking of the development plans. However, analogous to the findings of rank order 1 (see Figure 1); development plans like BP, GM and VP remained most likely to address the objectives. On the contrary, TIS is ranked as the best option. This change in order can be attributed to TIS ability to contribute to GGP and economic growth potential. Alternatives such as ET, MCH, B, PC, AF and the GH are still ranked as the least likely plans to fulfil the set objectives.

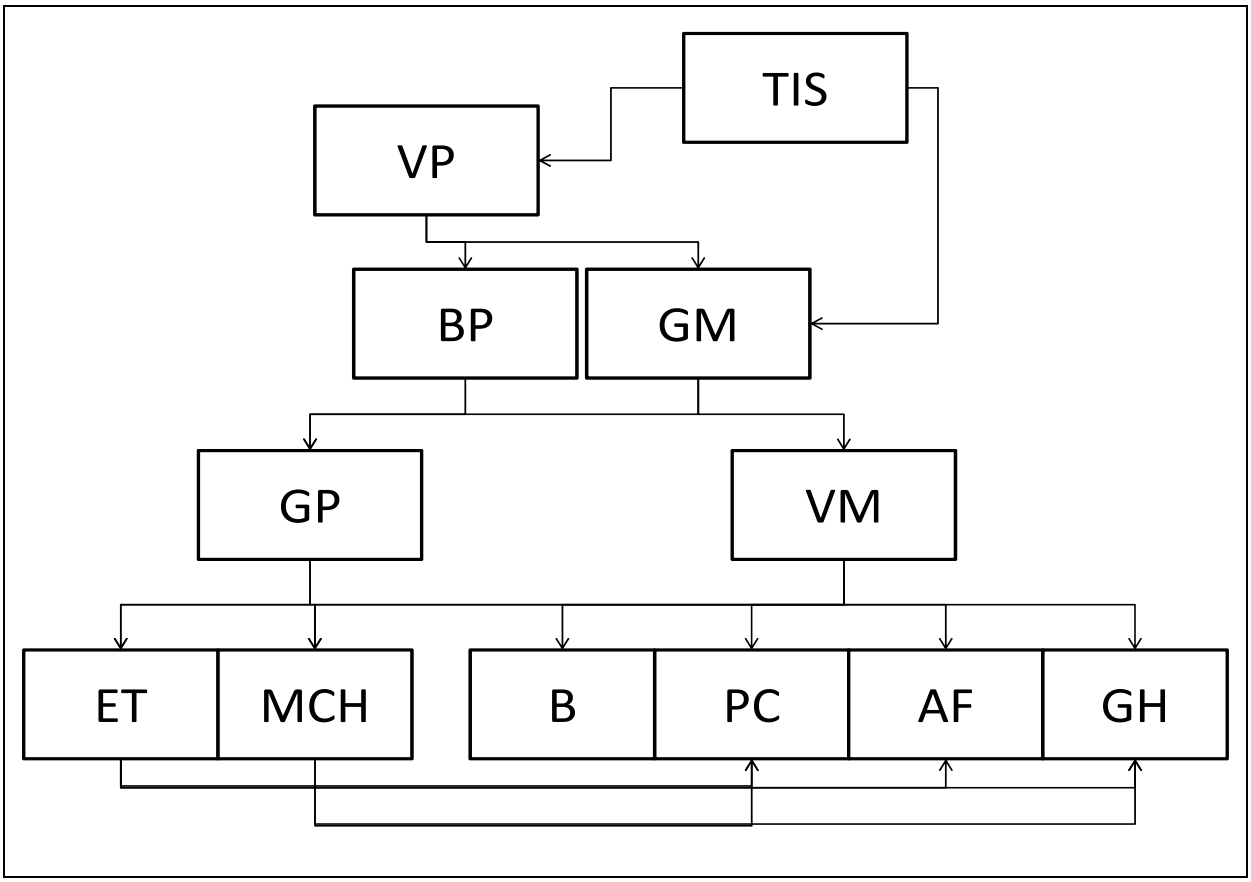

Figure 3: Rank order 3 (different ranking of criteria)

5. Conclusion

Amongst the alternatives, BP is evaluated as the most likely plan to achieve the set objectives. On the other hand, PC, GH and AF are evaluated as least likely to fulfil the set objectives. Therefore, in the case of the NWP, decision makers should concentrate on allocating funds towards BP, VP, GM, GP, VM and TIS, especially when faced with a budget constraint as is the case for the NWP.

Moreover, based on the results, one might conclude by arguing that MCA is a decision support tool that can assist government in their budget allocation decisions. Cognisance should however be taken as to which preference function is used and the weights assigned, as this is likely to influence the outcome of the results. However, as demonstrated in this study, when two different preference functions are used coupled with different weights; decision makers are likely to

determine the sensitivity of the different approaches. From this, a clearer picture as to which projects/plans are most likely to fulfil the set objectives could be portrayed. Therefore, one might conclude that the MCA framework is a tool that will enable government to allocate funds to development initiatives that will yield the highest returns, given the specific objectives of government.

References

AgMRC, (2010). A national information resource for value-added agriculture. Business plans. http://www.agmrc.org/business_development/starting_a_business/creating_a_business/business_plans.cfm. Accessed on 24 May 2010.

Balyamujura HN, (1995). Economic implications of different land use regimes in Mhala District. Unpublished MSc thesis, Department of Agricultural Economics, University of the Free State, Bloemfontein, South Africa.

DACERD, (2010). North West Provincial Budget Speech 2010 by Hon Louisa Lorato Mabe, MEC for Finance. http://www.nwpl.gov.za. Accessed on 31 May2010.

DACERD, (2008). Environmental Outlook, A report on the state of environment 2008. (http://www.nwpg.gov.za/Agriculture/NW_ENVIRONMENTAL_OUTLOOK/chapter.asp?CHAPTER=3&PAGE=5&TITLE=Responses). Accessed on 24 May 2010.

DoA, (2010). National Agricultural Research and Development Strategy. http://www.nda.agric.za/docs/researchP/RD_Strategy.pdf. Accessed on 28 May 2010.

Eicher CK, (1999). Institutions and the African farmer. Issues in Agriculture 14. Consultative Group on International Agricultural Research.

Fischer G, Granat J and Makowski M, (2010). An interactive multiple criteria analysis tool for land resources appraisal. Interim report, pg 7-9.

Figueira J, Salvatore G & Ehrgott, M, (2005). Multiple Criteria Decision Analysis: State of the Art Survey, Springer, New York.

Hajkowicz S, (2006). Taking a closer look at multiple criteria analysis and economic evaluation. CSIRO Sustainable Ecosystems, Brisbane. Presented at AARES, Manly, NSW 2006. *Sustainability: Science, Practice, & Policy* 4(1):17-24

Kangas J and Kangas A, (2004). Multiple criteria decision support in forest management - the approach, methods applied, and experienced gained. University of Helsinki, Faculty of Agriculture and Forestry, Department of Forest Resource Management.

Kosmidou, K & Zopounidis, C (2008). Measurement of Bank Performance in Greece, *South-Eastern Europe Journal of Economics*, Vol 1(2008): 79-95.

Magingxa, LL and Kamara, AB (2003). Institutional Perspectives of Enhancing Smallholder Market Access in South Africa. Paper prepared for the Agricultural Economic Association of South Africa (AEASA) 2003 Annual Conference, October 2 – 3, 2003, Pretoria, South Africa.

Magingxa LL, (2006). Smallholder irrigators and the role of markets: A new institutional approach. Submitted in fulfilment of the requirements for the degree of PhD. Department of Agricultural Economics, University of the Free State. Bloemfontein, South Africa.

Magingxa, LL, Alemu, ZG and Van Schalkwyk, HD, (2009). Factors influencing access to produce markets for smallholder irrigators in South Africa. Development Southern Africa, *Vol 26(1): 47-58.*

Marinoni O, Higgins A and Hajkowicz S, (2008). Development of a natural resource management investment decision support system. CSIRO Sustainable Ecosystem, St Lucia, Queensland. Environmental Modelling & Software 24, 153-164.

Munro W, (1999). Re-Forming the Post-Apartheid State. Citizenship and Rural Development in Contemporary South Africa. Transformation 30, pg 11.

Poulton C, Kydd J and Dorward A, (2006). Overcoming market constraints on pro-poor agricultural growth in sub-Saharan Africa. Development policy review, 2006.

Roy, B, (1985). Des Critères Multiples en Recherche Opèration, Economica, Paris.

UN, (2002). A Framework for Action on Agriculture. World Summit on Sustainable Development (Johannesburg). WEHAB Working Group. http://www.un.org/jsummit/html/documents/summit_docs/wehab_papers/wehab_agriculture.pdf. Accessed on 25 May 2010.