System Dynamics and Innovation in Food Networks 2009

Proceedings of the 3rd International European Forum on System Dynamics and Innovation in Food Networks, organized by the International Center for Food Chain and Network Research, University of Bonn, Germany
February 16-20, 2009, Innsbruck-Igls, Austria
officially endorsed by

EAAE(European Association of Agricultural Economists)
IAMA (International Food and Agribusiness Management Association)
AIEA2 (Assoc. Intern. di Economia Alimentare e Agro-Industriale)
INFITA (Intern. Network for IT in Agric., Food and the Environment)

edited by

M. Fritz, U. Rickert, G. Schiefer

Use of Simulation Models to Study the Dynamic of Recall of Non-Conform Perishable Produce through the Supply Chain

Patrizia Busato and Remigio Berruto
DEIAFA – University of Turin, Via Leonardo da Vinci 44, 10095 Grugliasco (TO), Italy,
patrizia.busato@unito.it

Abstract

The traceability allows, for each product, to sketch the manufacturing process through a system documentary, enabling to identify the operational structures involved, the products and the lots, to define the flows of production, packaging and distribution. There are researches that investigate the traceability within the firm, but little work has been carried out on the investigation of the traceability system over the whole supply chain.
The supply-chain of fresh produce is constituted of many links: producer/grower, warehouse, packing centre, distribution centre, retailers and finally the consumer. Each of these is a system itself that interacts with the other components of the supply-chain. The non-conformity could occurs in each of these links.
Because of processing plant requirement, storage requirements, and because of savings in the traceability process, often small size lots are merged together to form a large size lot at some points in the supply-chain. Larger lot size could imply higher risk for the consumers in case of recall of the produce and much higher recall time and cost for the supply-chain.
When a non-conformity occurs, the time to recall the produce depends on many factors: lot size, lead time for information spreading from link to link, product transit time among links, product storage procedures and times, and the point in the supply chain where the problem occurred. To study with a system approach different scenarios for the recall procedure the authors realized a discrete event dynamic simulation model using Extendsim®.
In the paper is described the model framework and one practical example.

Keywords: *Traceability, Logistics, Dynamic simulation*

Introduction

The request by the consumer of fresh products with elevated qualitative standard implies a supply chain managed in such way in order to keep the produce safe and of high quality up to the consumer. Often consumers have little control important quality criterions such as food safety, nutritional value origin of the product (Heyder et al., 2009). For this reason the European community provided in the past years many regulation to protect consumers against food hazards.

The Regulation (EC) 178/2002 define traceability as "the possibility to build up and follow the pattern for food produce, feed produce and animal used for food production or for the production of a ingredient or animal feed, through the production, processing and distribution phases.
The main drivers to implement the traceability system are: legislation, risk management strategies, the requirements of certification systems, improvements in internal and external business

processes, differentiation strategies and stakeholder demands (Theuvsen and Hollmann-Hespos, 2007).

For what concern the risk management strategies, public product recalls are a major threat to food manufacturers. Product recalls mainly result in fewer sales due to out-of-stocks and higher costs due to backhaul and disposal of defective products, additional laboratory analyses, ad hoc process improvements, compensation payments and crisis communication with supply chain partners and consumers (Heyder et al., 2009). Often the recall of a produce interest the whole chain of distribution (McGarry, 2007).

To this extent, the use of traceability could be a cost saving tool, not just for the firm but for the whole supply chain, that is usually constituted of many links: producer/grower, warehouse, packing centre, distribution centre, retailers and finally the consumer. Each of these is a system itself that interacts with the other components of the supply chain. There is a flow of orders and information that it goes from the consumer to the producer and a flow of product that it goes to the opposite direction, from producer to consumer (Prussia and Mosqueda, 2006).

In the distribution of the fruit and fresh vegetable, along the supply chain, plays an important role the logistics. Logistic is discipline that studies and optimises the management of the flow of products considering production, maintenance, transformation, transport and distribution of the products and information related to them (Busato and Berruto, 2006). The effective information exchange is the key to improving value chain performance and competitiveness in today's complex and rapidly changing environments (Busato et al., 2007; Hofstede, 2003), and traceability could help to pull out information from the system and make it available for improving the company and the supply chain (Berruto and Busato, 2006).

The traceability system involves the supply chain logistics, and it is a cost, both in terms of investments, and in term of operations. Many research studied the implementation of a tracing system within the firm, since this is mandatory by law (Heyder et al., 2009). For what concern the whole supply chain the research are still limited, however the study of the implementation of traceability on supply chain scale could lead up to many advantages: sharing some information and knowledge along the chain, improving the performance in the tracking and tracing procedures and in the recall operations.

The traceability operations in a supply chain could be considered as a system. The system is an interrelated set of objects, and has the following properties: is interactive, complex, and dynamic. When the question is the effectiveness of a tracing system, the answer depends on many parameters to be evaluated. This type of analysis is made possible by the system approach which is the process that refers to the study of the system as a whole, rather than examination of individual operations of its components. The traceability of a produce is certainly a discipline where the simulation can make important contributions to the organization of the processes and information, as well as the ways in which targeted interventions may be implemented to obtain efficiency throughout the whole supply chain. Examples concerning simulation used to study food supply chain are related to fresh produce (Busato and Berruto, 2006; Busato et al., 2007; Prussia et al., 2001; Prussia and Mosqueda, 2006) and dairy production (Monroy et al., 2008).

With the aim to provide a tool to assess the traceability system, the associated risks and costs, the authors start a research project to implement a discrete event simulation model able to predict the efficacy of different traceability scenarios for the supply chain of fruits and vegetables.

Methods

Discrete event modelling

The discrete event simulation models embed all the features needed to simulate a system: complexity, interactivity, and dynamicity. In these models the object are moving in the system and have their own attributes. This helps to differentiate them and their behavior inside the model. The entities moving in the model could be stored in a queue, waiting for some activities, or could be used/subjected to some operations. So the main components of the model will be the queue blocks and the activity blocks.
In this type of models the time step is irregular and determined by the events happening in the system. The event modify a state variable of the model or an item attribute. These models provide very nice results when there is a need to evaluate complex chains or networks.

Simulation software

For the model implementation, Extend system simulation software (Imagine That Corporation) was used. Extend is a general-purpose package suitable for modeling discrete, continuous, and mixed systems and utilize blocks, connected together to build the models. The entities move in the model from one block to the next through the connection lines. Groups of blocks can be combined into hierarchical blocks (H-blocks) with unlimited layers of nesting (Krahl, 2001). The graphical interface allows the user to easily follow and understand the flow of the entities and their attributes (simulated objects) through the model. The Extend® libraries, all open source, are the Generic, Discrete Event, and Manufacturing. User can also build his blocks and libraries. In this way, through the use of existing blocks in the Extend® library and the creation of custom libraries, very complex models can be built. Also, the block approach and hierarchy allows for models to be developed to various degrees of detail which reflect interest in particular issues as a function of the simulation study objectives (Busato and Berruto, 2006).
In 2006 the authors developed the FruitGame, a set of customs blocks in a library, dedicated for the simulation of supply chain for the distribution of fruits and vegetables (Busato and Berruto, 2006). The model simulates and tracks the supply chain performance by simulating the production and distribution of each single box of fruits and vegetable.
The paper presents an extension of the FruitGame library in order to implement the tracking and tracing system for the whole supply chain, and to study the effect of recall procedures under technical, logistic and economic point of view.

Parameters used to describe tracking and tracing systems in the model

When addressing the problem of recalling of a non-conform produce, the performance of the reverse logistic of the supply chain is important. Some factors have influence in this process, and the model should be able to represent them.
For the purpose of modeling the recall process, in Table 1 are described just the relevant factors and assumptions for the recall process, and not other aspects of supply chain performance related to quality, shelf-life or costs.
How much each parameter matter the tracking and tracing system vary also from link to link in the supply chain. So, the parameters listed in Table 1 have to be specified for each single link.

Table 1. Parameters determining effectiveness of traceability and recall procedures, for each single link in the supply chain

Parameter	Description	Information needed
Time when the problem occurs	The tracking system should notice a problem and record it	Time of the event, the batch (group of items) that present the problem, and the location
Time when the problem is evident	The tracing system should start the recall process by tracing back through the supply chain all the items of the same batch that present the problem	Time of the event, the batch of items, the location
Transit time	The longer the transit time, the easier to stop the produce before it reaches the consumers, if the problem was evident before the retailer. Not important if the produce was already available on the shelf	Delay for transit, location of origin, location of destination
Intermediate storage of produce	The intermediate storage of produce could be an advantage because we can stop the produce there before sell. This is the case of a distribution center between suppliers and retailers	Location, amount of non-conform produce
Information retrieval	Longer time to retrieve the information make the recall problem bigger and the risk of selling non conform produce higher	Delay for information retrieval, location
Information lead time (backward)	Longer time to transmit the information back in the chain make the recall problem bigger and the risk of selling non conform produce higher	Delay for information transmission, location of origin, location of destination
Information lead time (forward)	Once the problem location is known and the lot that present the problem is known, it is important to spread the information down to the links in the supply chain. Longer time for passing the information make the recall problem bigger and the risk of selling non conform produce higher	Delay for information passing, location of origin, location of destination
Batch size – lot size	Big lot size means big recall activities and expenses in case of problems. On the other hand the cost of recall depends on the probability to make mistakes in the processing. Small lot size increment the tracking costs and reduces the recall costs. Another issue is the batch reversibility, in the case the single items preserve its uniqueness after the batch or not	Location, lot size, and batch reversibility
Time to segregate non conform produce	This activity affect the costs of the recall	Location, delay for the activity
Time to transport non conform produce	This activity affect the costs of the recall	Delay for the activity, location of origin, location of destination

Model for the simulation of tracking and tracing systems

The parameters presented above are important to define how the traceability system works and should be included in the model. The model should be able to simulate the flow of produce and the flow of information through the supply chain. In addition, it should track the information related to a single item. To simulate the tracking and tracing system we need also some blocks

that performs this activity.
An example of the layout of the model is presented in Figure 1. Each link of the supply chain is represented by a group of blocks. The lines that connect the blocks represent the flow of product or the flow of information.

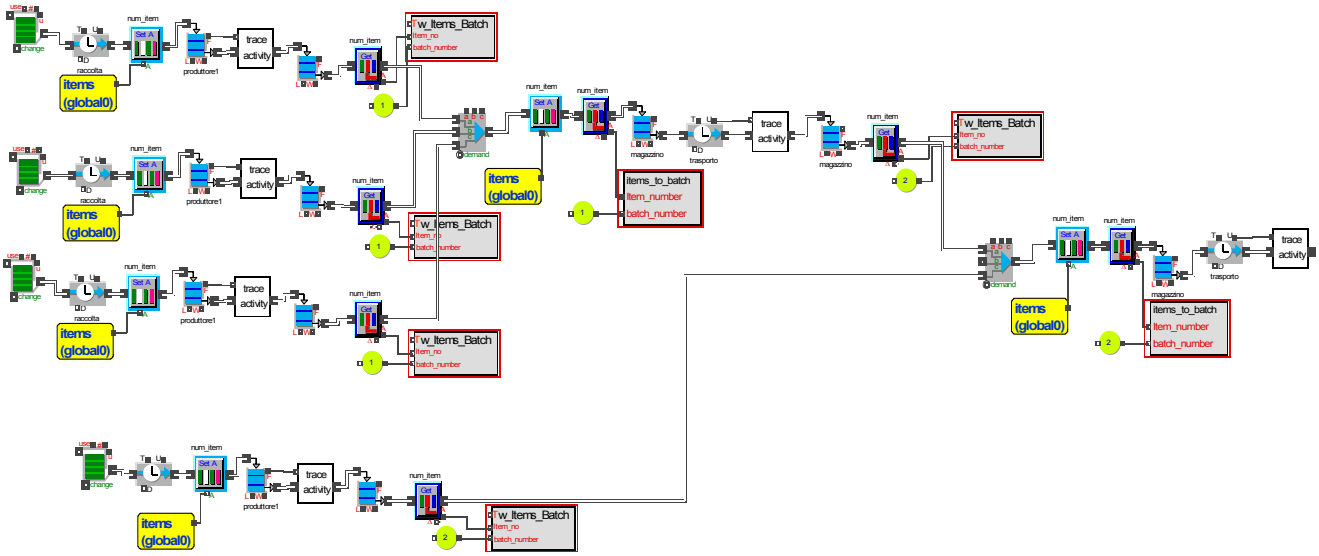

Figure 1. Portion of the main layer of the prototype model.

The information could be stored on each single item on in a batch. Batch represent in the simulation a group of items, that behave as a single item in the model until unbatch occurs. The produce is batched together in some points, for example when it is loaded on the truck, or is stocked on a pallet, so the unit to be moved is no longer the single object, but the batch itself. When the produce is in a batch, the information related to a single object cannot be read or written, and this is a problem for this type of simulation, where we want to track all the events and activities related to a single item.
Usually, in the discrete events models it is more important the system performance as a whole or in single location of the supply chain, rather than the flow of information that travels with each single item in the system. This framework structure is different since allows for complete tracking and tracing activities along the simulated system, for each item in the simulation.

Custom blocks for the simulation of tracking and tracing system

In order to simulate the traceability system, the authors made some custom blocks that are part of the library of the FruitGame. The custom blocks built so far addressed the problem to associate information and activities to the correct items when they are batched along the supply chain. They are described as follows:

- **Global arrays manager**. All the information is stored in a global array. It has basically no limits in the number of rows, and this helps to make larger simulations with a lot of items moving into the system. The main one called item array, allows storing all the data in a matrix. The columns of the array are the following:

  - **Item_origin**. This is the progressive number of the item in the array. Could represent a single item or a batch.
  - **Item_destination**. Describe the destination number of the item. If this number is the same of origin, this means the current array row refers to an activity or storage, without batching/unbatching of items. If Item_origin<Item_destination the record refer to a batch operation. If it is the opposite, the record refers to an unbatch operation.
  - **Location**. Refers to the location (activity, queue, storage) where the item just passed through.
  - **Simulated_time**. Record the simulated time the item passed thru the tracking block.

- **Monitor**. This block could be placed to monitor each part of the model. It records the item number; the location and the simulated time an item pass through it. The item could be single or could be a batch. In this way it can be noticed, for each item how much time elapsed from any point in the supply chain to the present one. This block is useful to study any kind of simulated scenarios.
- **Batch_read**. The batching activity is more important since it has to be recorded which items are in which batch. For this activity there are two custom blocks. The first one collects all the batched items and places their index in a dedicated array, the batch array. This occurs just before the batching activity.
- **Batch_write**. After the batch, a progressive number is assigned to the batch and this block updates the global array, associating to each item (item_origin) the number of the current batch (item_destination). The items to be batched could be also batches and not just single items. This allows nested batches.
- **Unbatch**. The unbatch is done in one step. The block looks in the global array when the item (batch) was created, and read all the items belonging to this one. Then write the output items in the global array for tracing purposes, in this case item_origin is the batch number, while item_destination is filled with the single item number.
- **Trace**. The trace block need just the item number to trace back all the activities and locations recorded in the global array that may have the non conform produce. The output of this block is a first step toward the recall process. An example of how it works is presented in table 2.
- **Track**. This block, with an item/batch number is tracking forward all the activities and locations recorded in the global array that may have the non conform produce. The output of this block listed all the locations/activities where could be stored a non conform produce.
- **Notify_recall**. Taking into account the transit time of information from link to link and the information retrieval time this block alert each single location interested by the non conform produce to start the recall process. The locations are provided in the output of the track block.
- **Recall**. Based on the received notification, this block segregate items/batches that have non conform produce inside, stopping the delivery of this to the following links in the chain.

Results of the first trial

A simple supply chain was simulated to test the ability of the model to track single items and batches passing through the chain. The chain presented in the Figure 1 consists of three producers that send their produce in a single load to the wholesaler. Another product is shipped directly to the wholesaler, as depicted in the figure. The produce is batched and then is shipped to a distribution centre. At the distribution centre, one produce goes to one retailer directly, while the other produce was transported to another distribution centre and then shipped to three different retailers. The traceability output is presented in Table 2.

Table 2. Results from the simulation of the supply chain presented in Figure 1. All the rows where the time and locations are not present refer to batch/unbatch activities. Simulated time is presented in hours

item origin	item destination	location(*)	simulated time
1	1	2	0,53
1	5	-	-
2	2	83	2,28
2	5	-	-
3	3	124	4,22
3	6	-	-
4	4	44	4,25
4	5	-	-
5	5	71	12,45
5	6	-	-
6	6	174	25,01
6	3	-	-
6	5	-	-
5	5	232	27,75
5	1	-	-
5	2	-	-
5	4	-	-
1	1	253	27,75
2	2	357	27,75
4	4	373	27,75
3	3	208	36,34

(*) this is a unique block number assigned by the model

Starting from the Table 2 data, the **trace** block will return the following output, if we request to trace back item #4. The operations are listed from most recent to early ones:

1. stored in a queue at retailer point (queue location 373), end at time 27,75;
2. unbatched from batch (item #5);
3. transported from distribution center to retailer point (activity location 232), end at time 27,75;
4. unbatched from batch (item #6);
5. transported from wholesaler to distribution center (activity location 174), end at time 25,01;
6. bacthed (item#6);
7. transported from producer to wholesaler (activity location 71), end at time 12,45;
8. batched (item#5);
9. harvested at producer location (activity location 44), end at time 4,25.

Beside these results it is possible to see the resource utilization and waiting times like in all the traditional models (e.g. storage space utilization, transport utilization, etc.). The performance of the simulated supply-chain can be also evaluated with the following indexes (Busato and Berruto, 2006):

Shelf-life residual. This is an index of quality of the product for the final consumer. The identification of the ITEM with the single box of product allows getting such index.
Percentage of orders filled in time. This index is important to establish the level of customer service and the reliability of the system.
Time in system and lead-time. These indexes measure the efficiency of the supply-chain. Reduced times of distribution allow to lengthen the residual shelf-life of the product.
Ratio between distribution cost and value of product. The efficiency and the performance of the supply-chain are to be considering together with the distribution cost and the value of the distributed product.

In addition, the new model framework, built to fulfil the traceability requirements, allow more specific evaluations in the chain, such, for instance, the cost of the transport in a specific phase, the quantity of product stored in a link, and so on.

Conclusions

Usually, in the discrete events models it is more important the system performance as a whole or in single location of the supply chain, rather than the flow of information that travels with each single item in the system.
This framework structure is different since allows for complete tracking and tracing activities along the simulated system. This is the starting point to study with a system approach the traceability and the recall of a produce, considering also working time, cost and risks associated with the production, distribution and processing of perishable produce.
With the built structure it is possible also to investigate many aspects related to the supply chain, like food quality, shelf life of the produce, chain performance and distribution costs, traceability performance and costs, and environmental aspects, such are the CO_2 emissions for the chain as a whole of for single produce distributed.

Acknowledgements. Support for this research was provided by a Grant "Ottimizzazione della logistica e del flusso di informazioni per le produzioni del Distretto orticolo della Provincia di Alessandria" financed by Regione Piemonte Council, Italy.

References

Berruto, R., Busato, P., La tracciabilità aziendale nella produzione di carne bovina e latte vaccino. Atti della giornata di studio su "Innovazioni tecnologiche per la tracciabilità nell'azienda agricola", Vol. I. L. Bodria, R. Oberti, BOLOGNA, 2006, pp. 81-97.

Busato, P., Berruto, R., FruitGame: Simulation Model to Study the Supply Chain Logistics for Fresh Produce. Computers in Agriculture and Natural Resources, Vol. I. F. Zazueta, J. Xin, S. Ninomiya, G. Schiefer, ORLANDO, 2006, pp. 488-493.

Busato, P. B. P., et al., FruitGame: a Simulation Tool to Evaluate Supply Chain Logistics and the Effects of Information Sharing for Fresh Produce. Environmental & Rural Sustainability through ICT, GLASGOW, 2007.

Heyder, M., et al., Agribusiness Firm Reactions to Regulations: The Case of Investments in Traceability Systems. In: G. Shiefer, M. Fritz, Eds.), 3rd International European Forum on 'System Dynamics and Innovation in Food Networks', Vol. electronic proceedings. Food Netcenter, Innsbruck-Igls, 2009, pp. 13.

Hofstede, G. J., Transparency in Netchains. In: Z. Harnos, et al., Eds.), EFITA 2003 - Information Technology for a better Agri-Food Sector, Environment and Rural Living. EFITA, Decebren, Hungary, 2003, pp. 11-17.

Krahl, D., The Extend® simulation environment. In: B. A. Peters, et al., Eds.), 2001 Winter Simulation Conference. IEEE Piscataway, NJ., 2001, pp. 217-225.

McGarry, J., The value of local produce. . 2007, pp. 5.

Monroy, C., et al., System Dynamics Simulation to Test Operational Policies in the Milk-Cheese Supply Chain. Case Study: Piar Municipality, Bolivar State, Venezuela. In: G. Shiefer, M. Fritz, Eds.), 2nd International European Forum on System Dynamics and Innovation in Food Networks, Innsbruck-Igls, Austria, 2008.

Prussia, S., et al., Management simulation game for improving food chains. Vol. 566. Acta Hoticulturae, 2001, pp. 231-236.

Prussia, S. E., Mosqueda, M. R. P., Systems thinking for food supply chains: fresh produce applications. 2006, pp. 91-104.

Theuvsen, L., Hollmann-Hespos, T., Investments in tracking and tracing systems: An empirical analysis of German food manufacturers. In: C. Parker, (Ed.), EFITA 2007. EFITA, Glasgow, 2007.