HETEROGENEOUS "CREDIT CHANNELS" AND OPTIMAL MONETARY POLICY IN A MONETARY UNION

Leonardo Gambacorta

No.492

WARWICK ECONOMIC RESEARCH PAPERS

THE UNIVERSITY OF WARWICK

DEPARTMENT OF ECONOMICS

HETEROGENEOUS "CREDIT CHANNELS" AND OPTIMAL MONETARY POLICY IN A MONETARY UNION

Leonardo Gambacorta
Department of Economics
University of Warwick
COVENTRY CV4 7AL
England, UK.

&

Banca d'Italia - Divisione VIF
Piazza Edison, 3
20123 Milano
Italia.

No.492

September 1997

HETEROGENEOUS "CREDIT CHANNELS" AND OPTIMAL MONETARY POLICY IN A MONETARY UNION

by Leonardo Gambacorta (*)

Abstract

The growing prospect of European monetary integration has prompted interest in the study of differences in financial systems and their consequences for monetary transmission processes. This paper analyses the case of a monetary union composed of countries with heterogeneous "credit channels". In order to better insulate the economies from the asymmetric effects produced by differences in national financial systems, a money supply process, based on the interest rate on bonds and its spread with respect to the bank lending rate, is proposed. Using a two-country rational expectations model, this study compares the performance of the "pure" policies (money targeting, interest rate on bonds and spread pegging) and highlights the properties of the optimal monetary instrument.

Contents

(*) University of Warwick and Bank of Italy.

1. Introduction[1]

The growing prospect of European monetary integration has prompted interest in the study of differences in financial systems (both structural and institutional) among *EU* countries and their consequences for monetary transmission processes. In the spirit of Bernanke and Blinder (1988), heterogeneity in the structure of financial intermediation and the degree and composition of firms' and households' indebtedness could imply a different effectiveness of the "credit channel" of monetary policy among *EU* countries. Empirical studies seem to confirm the importance of these asymmetries. For example, the presence of a "credit channel" has been found in the United Kingdom (Dale and Haldane, 1993*a*, 1993*b* and 1995) and Italy (Buttiglione and Ferri, 1994, Angeloni et al., 1995, Bagliano and Favero, 1995), but not in France (Bellando and Pollin, 1996) and, at least at the macro level, in Germany (Barran, Coudert and Mojon, 1995). Apart from the different conclusions, these econometric studies point out the high information content of the spread between bank lending rates and market rates in explaining loan market disturbances and their impact on the evolution of real output (see also Kashyap, Stein and Wilcox, 1992).

The aim of this paper is to analyse the optimal monetary policy in the case of a monetary union composed of countries with heterogeneous "credit channels". In order to better insulate the economies from the asymmetric effects produced by differences in national financial systems, the classic money supply process proposed by Poole (1970) is modified to consider the spread between the interest rates on loans and bonds as an additional feedback variable. Comparing the results of the "pure" policies, the main conclusion is that if the primary objective of the area-wide monetary authority is the maintenance of price stability, money targeting is generally preferred to interest rate on bonds and spread pegging. On the other hand, spread pegging implies better consequences in terms of both output stabilisation and minimisation of the asymmetric effects across countries. The country with a more effective "credit channel" always performs better, independently from the selected policy rule.

The remainder of the paper is organised as follows. Section 2 presents the analytical framework, based on a two-country rational expectations model along the lines of Turnovsky and d'Orey (1989) and Monticelli (1993), which is then used to analyse the case of a monetary union (Section 3). After discussing the objective function of the area-

[1] The author is grateful to D. Delli Gatti, A. Demarco and J. Smith for useful comments. The opinions expressed in this paper are those of the author only, and in no way involve the responsability of the Bank of Italy.

wide monetary authority (Section 4), a comparison between interest pegging and money targeting is carried out (Section 5). Section 6 investigates the property of the money supply process as indicated by Poole (1970) and derives the analytical solution for the optimal monetary policy. Section 7 studies the implications of the alternative money supply process based on the spread between the interest rates on loans and bonds, while a comparative analysis between spread pegging and money targeting is undertaken in section 8. Section 9 analyses the optimal monetary rule based on an alternative money supply process that uses as feedback variables both the interest rate on bonds and the spread. The last section summarises the main conclusions.

2. The analytical framework

The analysis is based on a two-country rational expectations model in which both economies are subject to real and nominal disturbances. The specification is log-linear and, in order to simplify the analytical forms, all variables are expressed as deviations from their trend level.

The system of equations is summarised in table 1 where asterisks are used to indicate variables pertaining to the foreign country. The model has three assets (money, bonds and loans) and a common traded good.

The first pair of equations indicates the equilibrium on the money market. In particular, (1) represents a standard money demand function where, for simplicity, the income elasticity is set to one, while (2) specifies the money supply process as indicated by Poole (1970). In the presence of stochastic disturbances, movements in the interest rate embody information on the nature of the current shocks, so that the optimal monetary instrument is defined by a feedback rule from interest rate changes to money stock. In terms of the classical *IS-LM* model, this means fixing the optimal slope of the *LM* function by making money supply interest sensitive. The policy instrument is represented by k, which optimises the stabilisation objectives of the authorities. In particular, imposing a non negative *LM* slope ($\frac{1}{2a+k}$), this parameter will lie in the interval $-2a<k<\infty$ which includes the "pure" policies of money targeting ($k=0$) and interest rate pegging ($k=\infty$).[2]

[2] In the analysis of this paper the policy variable k is assumed to be controlled without error while no use is made of the proximate target concept. This approach has been followed, on the one hand, to simplify the analysis, and, on the other, because the treatment of the money stock as a stochastic function of the monetary base would not have changed the results of the study.

Table1
The analytical framework

	Home country		Foreign country	
		Money market		
Money demand	$m_t^d - p_t = y_t - ai_t + u_{md}$		$m_t^{*d} - p_t^* = y_t^* - ai_t^* + u_{md}^*$	(1)
Money supply	$m_t^s = m_t + ki_t$	(a, k and $k^*>0$)	$m_t^{*s} = m_t^* + k^* i_t^*$	(2)
		Loan market		
Loan demand	$l_t^d - p_t = wy_t - h\tilde{\rho}_t + u_{ld}$		$l_t^{*d} - p_t^* = wy_t^* - h\tilde{\rho}_t^* + u_{ld}^*$	(3)
Loan supply	$l_t^s = zm_t + q\tilde{\rho}_t + u_{ls}$	(h, q, w and $z>0$)	$l_t^{*s} = zm_t^* + q\tilde{\rho}_t^* + u_{ls}^*$	(4)
		Bond market		
Households' and firms' balance constraint	$m_t + b_t^{dh} = l_t^d + b_t^s + W$		$m_t^* + b_t^{*dh} = l_t^{*d} + b_t^{*s} + W^*$	(5)
Banks' balance constraint	$l_t^s + b_t^{db} + r_t = m_t$	($W>0$)	$l_t^{*s} + b_t^{*db} + r_t^* = m_t^*$	(6)
		Output market		
Aggregate demand	$y_t^d = by_t^* - f(i_t - \underset{t}{E} p_{t+1} + p_t) + - d(p_t - p_t^* - e_t) - v\tilde{\rho} + u_{yd}$		$y_t^{*d} = by_t - f(i_t^* - \underset{t}{E} p_{t+1}^* + p_t^*) + - d(p_t^* - p_t + e_t) - v'\tilde{\rho}^* + u_{yd}^*$	(7)
Aggregate supply	$y_t^s = g(p_t - \underset{t-1}{E} p_t) + u_{ys}$	($0<b<1, f>v>0$, $d>0$ and $g>0$)	$y_t^{*s} = g(p_t^* - \underset{t-1}{E} p_t^*) + u_{ys}^*$	(8)
		Arbitrage conditions		
Uncovered interest parity		$i_t = i_t^* + \underset{t}{E} e_{t+1} + e_t$		(9)
Purchasing power parity		$p_t = p_t^* + e_t + u_p$		(10)

List of variables

a= elasticity of demand for money with respect to real output,

b=elasticity of exports with respect to foreign real output (it represents also the degree of interrelation between the countries),

b^d=nominal bond demand by households (b^{dh}) and banks (b^{db}), expressed in logarithms,

b^s=nominal supply of bonds by firms, expressed in logarithms,

d= elasticity of aggregate demand with respect to the real exchange rate,

e= exchange rate, measured in terms of units of domestic currency per unit of foreign currency, expressed in logarithms,

E_t= expectation operator, conditioned on information at time t,

f= measure of the overall (common to the capital and credit markets) effect on output of a change in the real interest rate on bonds ("money channel"),

g= measure of the "price surprise" effect on real output,

h= elasticity of demand for loans with respect to the spread,

i= nominal interest rate, expressed in units,

k= policy instrument,

l^d= nominal loan demand, expressed in logarithms,

l^s= nominal loan supply, expressed in logarithms,

m^s=nominal money supply, expressed in logarithms,

p= price of output expressed in logarithms,

q= elasticity of supply of loans with respect to the spread,

$\tilde{\rho}$ = spread between the interest rate on loans (ρ) and bonds (i), expressed in units,

u_{ld}= stochastic disturbance in the demand for loans,

u_{ls}= stochastic disturbance in the supply of loans,

u_{md}= stochastic disturbance in the demand for money,

u_p= stochastic disturbance in the purchasing power parity condition ("price-wedge"),

u_{yd}= stochastic disturbance in the aggregate demand,

u_{ys}= stochastic disturbance in aggregate supply,

v= measure of the effect on real output of a change in the *spread* ("credit channel"),

w= elasticity of demand for loans with respect to real output,

W= nominal wealth, expressed in logarithms,

y= real output in logarithms, measured as a deviation from its natural rate level,

z= elasticity of supply of loans with respect to money supply.

Ignoring currency in circulation, the equilibrium in the money market coincides with the equilibrium in the deposit market. In fact, setting for simplicity the interest rate on deposits to zero, equation (1) represents also the deposit demand, while the supply of money is equal to the supply of deposits by definition.

Following Bernanke and Blinder (1988), the loan market is characterised by imperfect substitutability between bonds and loans: borrowers (households and firms) and lenders (banks) choose, respectively, their liability and asset composition according to the spread between the interest rate on loans (ρ) and bonds (i). The demand for credit (3) is negatively influenced by the spread and positively related to real output for transactions motive (working capital or liquidity considerations). The loan supply (4) depends positively on money (equal to deposits) and the spread (it is implicitly assumed that the rate of return on excess reserves is zero). The loan market clears by quantities (l_d=l_s) and there is no credit rationing.

Given total wealth, the bond market is conveniently suppressed by Walras law using the private sector balance constraints (5) and (6).

The equilibrium in the goods market is given by equations (7) and (8). The first relation represents output demand, which depends upon the other country's output (via exports) and the real exchange rate (measure of competitiveness). Moreover output demand is influenced by the cost of financing for investment and consumption. The conditions of the capital market are captured by the real interest rate on bonds ("money channel"), while the spread ($\tilde{\rho} = \rho - i$) underlines the conditions of the credit market ("lending channel").

In fact, if some borrowers (not only households but also "small" firms) have no access to the capital market they have to rely on bank credit for external funding. In this situation, bonds and loans are imperfect substitutes and every change in the composition of bank assets influences the spread and investment financing.[3]

---

[3] Some observations on the form used for output demand are worth making. Equation (7) is equivalent to the one that considers separately the influence of the two real interest rates on bonds and loans. In fact, fixing the other variables and expressing for simplicity the interest rates in nominal terms, the relation $Y = -f'i - v'\rho$ is equivalent to $Y = -fi - v(\rho - i)$ with $Y_i = -f' = -f + v < 0$ and $Y_\rho = -v' = -v < 0$. The only restriction to impose is that, given $Y_i < 0$, it must be that $f > v$. However, the interpretation of f' is different from that of f. The former explains only the effects on output of the interest rate condition in the bond market, while the latter ($f = f' + v'$) measures the overall effect of a change in i, which is common to the bond and credit markets, assigning v the task of capturing the effect caused by the "peculiarity" of the loan market with respect to the capital market.

The parameter v has a special role in the model and represents the only asymmetry in the economic structure of the two countries. It shows the strongest impact of monetary transmission on output due to the relative importance of intermediate versus direct financing. In summary, the value of this parameter is expected to be high if the private debt market is less developed, and/or firms' and households' indebtedness is significant and dependent on the bank sector. In order to emphasise the source of divergence of a heterogeneous financial system on the monetary transmission mechanism described by the model, the home country has been considered more dependent on the "credit channel" ($v>v^*$).

Equation (8) is a standard Lucas supply function where deviations in output from its natural rate (normalised to zero) are a positive function of unanticipated movements in the price level.

The two country blocks are linked by equations (9) and (10) that represent, respectively, the uncovered interest parity (*UIP*) condition and a stochastic version of the purchasing power parity (*PPP*) condition. The *UIP* postulates the perfect substitutability between bonds of two countries. On the contrary loans are considered imperfect substitutes, not only because bank credit depends on customer relationships that facilitate concentration in local markets[4], but also due to the lack of an efficient secondary market for credit which prevents arbitrage. The *PPP* assumes perfect substitutability in the output market, except for the random disturbance, u_p, which represents market imperfections. This wedge between the prices of the two countries is determined by a difference in the monopolistic power of firms and trade unions (Minsky and Ferri, 1984). In particular, the capacity of firms to influence prices (mark-up) depends on institutional factors (monopoly legislation) and demand elasticities, while the ability of trade unions to influence wages (and so prices) depends on workers' participation and the level of unemployment (see Layard, Nickell and Jackman, 1991).[5]

All the stochastic variables are assumed to be independently distributed with zero mean and finite variance ($u \sim \text{id}\ (0,\sigma_u)$). This simplifying hypothesis could be relaxed by modelling "permanent" shocks (expecially on the "supply side") as changes in mean.

---

[4] In some cases credit relationships are characterised by a "lock-in" effect that allows the bank to extract a monopolistic rent from the client (see Sharpe, 1990 and Rajan, 1992).

[5] It is worth noting that, as will be shown in Section 3, u_p influences aggregate demand (via investment and consumption), while "supply-side" (factor costs) differences are captured by u_{ls} and u_{ls^*}.

3. The case of a monetary union

This section analyses the implications of a monetary union in the two-country model discussed above. The introduction of a unique money at the area-level means not only fixing irrevocably the exchange rate[6], but also specifying a common monetary policy.

The irrevocable fixing of the exchange rate (for example to one, so that e_t=0) modifies the *UIC* and the *PPP*. The first condition (see equation (9') in table 2) implies the uniqueness of the interest rate on bonds at the area-level (the same default risk is assumed between borrowers in the two countries), while the second condition shows that the difference in prices depends only on the disturbance μ (see equation (10')). In particular, assuming a homogeneus "anti-trust" legislation, this wedge in prices reflects principally differences between national labour markets (unemployment levels) that determine different wage pressures on price and demand.

The monetary policy is determined by equation (2') that represents an extension at the area-level of the money supply process discussed in section 2 (see Monticelli, 1993). It is worth noting that this rule determines the overall amount of money ($m^s = (m_t + m_t^*)^s$) without any indication of its distribution between the two countries (this assumption will be relaxed in Section 6).

Assuming that the optimal policy is constant over time, given that the model is in deviation form, all the expectations based on information at time t can be set to zero ($\underset{t}{E} p_{t+1} = \underset{t}{E} p^*_{t+1} = 0$). On the other hand, even if the rational expectations hypothesis assumes that agents know the model period by period, the parameters are not necessarily constant over time and may cause "price surprise" effects ($\underset{t-1}{E} p_t$ could be different from zero).

Dealing with a rational expectations model, a classic "three-step" method has been used. The solutions for prices and real output, reported in table 3, suggest the following comments.

---

[6] This assumption, in line with the Delors' Committee (1989), implies that an irrevocable fixed exchange rate would make national monies perfect substitutes and therefore be equivalent to the creation of a common currency. For the institutional aspect of the difference between having separate national currencies with irrevocably fixed exchange rates and a common currency, see amongst others, De Grauwe (1994) and Gros and Thygesen (1992).

Table 2
The case of a monetary union

	Home country		Foreign country	
		Money market		
Money demand	$m_t^d - p_t = y_t - ai_t + u_{md}$	(a and $k>0$)	$m_t^{*d} - p_t^* = y_t^* - ai_t^* + u_{md}^*$	(1)
Money supply		$m' = (m_t + m_t^*)^s = m_t + m_t^* + ki_t$		(2')
		Loan market		
Loan demand	$l_t^d - p_t = wy_t - h\tilde{\rho}_t + u_{ld}$		$l_t^{*d} - p_t^* = wy_t^* - h\tilde{\rho}_t^* + u_{ld}^*$	(3)
Loan supply	$l_t^s = zm_t + q\tilde{\rho}_t + u_{ls}$	(h, q, w and $z>0$)	$l_t^{*s} = zm_t^* + q\tilde{\rho}_t^* + u_{ls}^*$	(4)
		Bond market		
Households' and firms' balance constraint	$m_t + b_t^{dh} = l_t^d + b_t^s + W$		$m_t^* + b_t^{*dh} = l_t^{*d} + b_t^{*s} + W^*$	(5)
Banks' balance constraint	$l_t^s + b_t^{db} + r_t = m_t$	($W>0$)	$l_t^{*s} + b_t^{*db} + r_t^* = m_t^*$	(6)
		Output market		
Aggregate demand	$y_t^d = by_t^* - f(i_t + p_t) + - d(p_t - p_t^*) - v\tilde{\rho} + u_{yd}$		$y_t^{*d} = by_t - f(i_t^* + p_t^*) + - d(p_t^* - p_t) - v'\tilde{\rho}^* + u_{yd}^*$	(7')
Aggregate supply	$y_t^s = g(p_t - \underset{t-1}{E} p_t) + u_{ys}$	($0<b<1, f>v>0, d>0$ and $g>0$)	$y_t^{*s} = g(p_t^* - \underset{t-1}{E} p_t^*) + u_{ys}^*$	(8)
		Arbitrage conditions		
Uncovered interest parity		$i_t = i_t^*$		(9')
Purchasing power parity		$p_t = p_t^* + u_p$		(10')

Table 3: Reduced form of the model with a money supply process based on the interest rate on bonds

(11) $p_t = A_0 m + A_1 m^* + A_2(u_{ls} - u_{ld}) + A_3(u_{ls*} - u_{ld*}) + A_4(u_{md} + u_{md*}) + A_5(u_{yd} + u_{yd*}) + A_6 u_{ys} + A_7 u_{ys*} + A_8 u_p$

(12) $p_t^* = B_0 m + B_1 m^* + B_2(u_{ls} - u_{ld}) + B_3(u_{ls*} - u_{ld*}) + B_4(u_{md} + u_{md*}) + B_5(u_{yd} + u_{yd*}) + B_6 u_{ys} + B_7 u_{ys*} + B_8 u_p$

(13) $y_t = C_2(u_{ls} - u_{ld}) + C_3(u_{ls*} - u_{ld*}) + C_4(u_{md} + u_{md*}) + C_5(u_{yd} + u_{yd*}) + C_6 u_{ys} + C_7 u_{ys*} + C_8 u_p$

(14) $y_t^* = D_2(u_{ls} - u_{ld}) + D_3(u_{ls*} - u_{ld*}) + D_4(u_{md} + u_{md*}) + D_5(u_{yd} + u_{yd*}) + D_6 u_{ys} + D_7 u_{ys*} + D_8 u_p$

where:

$A_0 = B_0 = [2f\vartheta_2 + (2a+k)vz] / [4f\vartheta_2 + (2a+k)(2f\vartheta_2 + v + v^*] > 0$

$A_1 = B_1 = [2f\vartheta_2 + (2a+k)v^* z] / [4f\vartheta_2 + (2a+k)(2f\vartheta_2 + v + v^*] > 0$

$A_2 = B_2 = [(2a+k)v] / \Delta > 0$

$A_3 = B_3 = [(2a+k)v^*] / \Delta > 0$

$A_4 = B_4 = (-2f\vartheta_2) / \Delta < 0$

$A_5 = B_5 = (2a+k)\vartheta_2 / \Delta > 0$

$A_6 = B_6 = -[2f\vartheta_2 + (\vartheta_1\vartheta_2 + vw)(2a+k)] / \Delta < 0$

$A_7 = B_7 = -[2f\vartheta_2 + (\vartheta_1\vartheta_2 + v^* w)(2a+k)] / \Delta < 0$

$A_8 = \{(2a+k)[g\vartheta_1\vartheta_2 + f\vartheta_2 + v^*(1+gw)] + 2f\vartheta_2(1+g)\} / \Delta > 0$

$B_8 = -\{(2a+k)[g\vartheta_1\vartheta_2 + f\vartheta_2 + v(1+gw)] + 2f\vartheta_2(1+g)\} / \Delta < 0$

$\Delta = (2a+k)[2(f + g\vartheta_1)\vartheta_2 + (v+v^*)(1+gw)] + 4f\vartheta_2(1+g) > 0$

$0 < \vartheta_1 = 1 - b < 1$ and $\vartheta_2 = h + q > 0$

$C_0 = C_1 = D_0 = D_1 = 0$

$C_2 = D_2 = [g(2a+k)v] / \Delta > 0$

$C_3 = D_3 = [g(2a+k)v^*] / \Delta > 0$

$C_4 = D_4 = (-2fg\vartheta_2) / \Delta < 0$

$C_5 = D_5 = g(2a+k)\vartheta_2 / \Delta > 0$

$C_6 = \{2f\vartheta_2(2+g) + [2f\vartheta_2 + g\vartheta_1\vartheta_2 + v + v^*(1+gw)](2a+k)\} / \Delta > 0$

$C_7 = -g[2f\vartheta_2 + (\vartheta_1\vartheta_2 + v^* w)(2a+k)] / \Delta < 0$

$C_8 = g\{2f\vartheta_2(1+g) + [f\vartheta_2 + g\vartheta_1\vartheta_2 + v^*(1+g)](2a+k)\} / \Delta > 0$

$D_6 = -g[2f\vartheta_2 + (\vartheta_1\vartheta_2 + vw)(2a+k)] / \Delta < 0$

$D_7 = \{2f\vartheta_2(2+g) + [2f\vartheta_2 + g\vartheta_1\vartheta_2 + v^* + v(1+gw)](2a+k)\} / \Delta > 0$

$D_8 = -g\{2f\vartheta_2(1+g) + [f\vartheta_2 + g\vartheta_1\vartheta_2 + v(1+g)](2a+k)\} / \Delta < 0$

(i) The only effect of monetary policy is on prices (both in actual and expected), while real incomes are a function only of the disturbances (only an unexpected monetary policy can influence output). This result depends on the assumption that the money supply rule is incorporated into agents' expectations at t and cannot cause any "surprise".

(ii) The distribution of money between the two countries produces an asymmetric effect. In fact, given the assumption $v>v^*$, the following relation holds: $A_0=B_0>A_1=B_1$ and, therefore, price levels are lower if $m<m^*$.

(iii) The impact of exogenous shocks on each of the two economies depends on the choice of the monetary instrument (k).

(iv) Disturbances in loan supply and demand have an opposite effect on the endogenous variables. In particular a positive supply shock, generating a reduction of the cost of bank credit, increases real output and inflation, while a positive demand shock produces an increase in the spread, causing the opposite result. Moreover, given the complete financial integration between the two economies, internal and external shocks on the loan market enter the equations with the same sign, while the absolute value is directly proportional to the different effectiveness of the "credit channel" (given $v>v^*$, $A_2=B_2>A_3=B_3$).

(iv) Internal and external money demand shocks influence prices and income with the same intensity. This result depends on the symmetry of the parameter f and $\vartheta_2 = h+q$ that represent, respectively, the relevance of the "money channel" and the sum of the elasticities of demand and supply of loans with respect to the spread. In particular, prices and income are negatively affected by shocks in money demand with an intensity that is directly proportional to the above mentioned parameters.

(v) Also shocks to output demand have the same influence on the price levels and real incomes. In fact, as a result of the perfect substitutability in the output market (*PPP* condition), the different competitiveness between the two countries has no influence on the sum of outputs and therefore the parameter d, denoting the elasticity of output demand to the measure of competitiveness, does not enter the solutions.

(vi) All financial and aggregate demand shocks affecting the two economies enter the equations in additive form and, therefore, the monetary union tends to reduce the effects of such disturbances only if they are negatively correlated.

(vii) The difference between the intensity of financial and aggregate demand shocks on prices and output depends on the value of g that represents the elasticity of the *AS*

curve. In fact, given the relation $C_i=gA_i$ for $i=2,...,5$, if the value of g is greater than one (AS tends to be less steep, as in the keynesian case) output variations are greater than price changes. On the contrary, if $g<1$ (AS tends to become vertical) financial and aggregate demand shocks produce their effects for the most part on prices, while real output is close to its natural level.

(viii) Supply shocks have a different effect on the endogenous variables. On the one hand, a supply shock (internal or external) produces a variation in the price levels with an intensity that is directly related to the relative importance of the credit channel. Considering the assumption $v>v^*$, the variation in prices is relatively higher if the supply shock related to the home country and vice versa. On the other hand, the effects on output are asymmetric. An internal positive supply shock produces a boom while an external positive supply shock causes a depression. Also in this case the intensity of change in output depends on the relative weight of the "credit channel" ($C_6>D_7$ and $C_7>D_6$).

(ix) Also a shock in the "price-wedge" affects price levels and real incomes in opposite direction. In the case of a positive shock (on demand), caused for example by a lower level of unemployment and higher wages in the home country, the internal level of prices and income increase, while the opposite happens in the foreign country.

(x) Only when the sources of instability discussed in (viii) and (ix) are negligible does the stabilisation objective of each of the countries coincide with that of the monetary-area as a whole.

4. The objective function of the area-wide monetary authority

The monetary policy at the area-level is supposed to be unique and formulated by an independent council which represents the two countries. The primary objective of this authority is supposed to be the maintenance of price stability.[7] Therefore the monetary instrument k is chosen in order to minimise the following loss function:

(11) $$\min_k \quad L^p = Var(p) + \alpha\, Var(p^*) \quad \text{with } \alpha>0$$

[7] These hypotheses are consistent with the Maastricht Treaty. The Governing Council, which formulates the monetary policy of the Community (intermediate monetary policy, interest rate pegging and supply of reserves in the system), is composed of six members constituting the Executive Board and the Governors of the national central banks. All members of the Governing Council have one vote (see Art.10 of the Maastricht Treaty). Moreover, art. 2 of the Statute for the European System of Central Banks (ESCB) states that "the primary objective of the ESCB shall be to maintain price stability".

Since all the variables are expressed as deviations from their trend level, this objective function is equivalent to stabilising inflation. Moreover, this function encompasses the whole spectrum of the degree of symmetry that can characterise the monetary union. In particular, if the two countries have the same weight in formulating the monetary policy (each of them have one vote) then $\alpha=1$.[8] On the other hand, if the monetary union is composed of two groups of countries, with different characteristics in the financial systems ($v>v^*$), $\alpha>0$ could represent their proportion. In particular, $\alpha>1$ describes the case of a smaller number of countries with a relatively high effective "credit channel" ($n_1 < n_2$ with $\alpha=n_2/n_1>1$) and vice versa.

Following the basic idea in Rogoff (1985), the minimisation of the objective function (11) could have different welfare implications regarding output stabilisation. The latter can be measured by:

$$L^y = Var(y) + \alpha\, Var(y^*) \tag{12}$$

with the parameter α that has the same interpretation discussed above. In this case, the consequences of a "too conservative" area-wide central bank, should encompass also the possible asymmetric effects in terms of real output between the economies.

Using the definition of variance and the assumption of independently distributed shocks, the following equations are obtained:

$$\begin{aligned} Var(p_t) + \alpha Var(p_t^*) &= (1+\alpha)A_2^2(\sigma^2_{uls} + \sigma^2_{uld}) + (1+\alpha)A_3^2(\sigma^2_{uls*} + \sigma^2_{uld*}) + \\ &+(1+\alpha)A_4^2(\sigma^2_{umd} + \sigma^2_{umd*}) + (1+\alpha)A_5^2(\sigma^2_{uyd} + \sigma^2_{uyd*}) + (1+\alpha)A_6^2\sigma^2_{uys} + \\ &+(1+\alpha)A_7^2\sigma^2_{uys*} + (A_8^2 + \alpha B_8^2)\sigma^2_{up} \end{aligned} \tag{13}$$

$$\begin{aligned} Var(y_t) + \alpha Var(y_t^*) &= (1+\alpha)C_2^2(\sigma^2_{uls} + \sigma^2_{uld}) + (1+\alpha)C_3^2(\sigma^2_{uls*} + \sigma^2_{uld*}) + \\ &+(1+\alpha)C_4^2(\sigma^2_{umd} + \sigma^2_{umd*}) + (1+\alpha)C_5^2(\sigma^2_{uyd} + \sigma^2_{uyd*}) + (C_6^2 + \alpha D_6^2)\sigma^2_{uys} + \\ &+(C_7^2 + \alpha D_7^2)\sigma^2_{uys*} + (C_8^2 + \alpha D_8^2)\sigma^2_{up} \end{aligned} \tag{13'}$$

with the expressions of the symbols that are identical to those reported in table 2. It is worth noting that, apart from the difference in the weight for the two groups of countries (α), the only source of asymmetry in price stabilisation is represented by the shock in the

---

[8] In this case, given that A_8-$B_8=1$, it is possible to show that the objective function *(11)* is equivalent to minimising the variance of the sum of prices, $Var(p) + Var(p^*) = Var(p+p^*)$.

"price-wedge" ($A_8 \neq B_8$). On the other hand, as regards output stabilisation, internal ($C_6 \neq D_6$) and external ($C_7 \neq D_7$) supply shocks could also determine a different sensitivity of the results.

5. The performance of the "pure" monetary policies as a benchmark

This section examines the different performances in terms of prices (and their consequences with respect to output stabilisation) of the "pure" policies of *interest rate pegging* and *money targeting* (hereafter "*i*" and "*m*" rules).

As reported in Section 2, the combined policy described by equation (2') in table 2 becomes a pure interest rate rule when $k=\infty$, and a pure money stock supply when $k=0$. It should be obvious that, except in special cases, the optimal monetary rule $-2a < k < \infty$ is superior to both of the "pure" policies. However, the success of the optimal money supply process depends on the complete knowledge of the parameters of the model, while the "pure" policies are simple rules that can be applied in the face of a change in the environment in which monetary policy operates.

The different performances of the "pure" policies are worked out using equations (13) and (13'). For simplicity, all the variances of the disturbances have been set to 1, while, in order to compare the results with respect only to the different financial structure between the countries, the symmetric case $\alpha=1$ has been chosen.

Tables 4-8 present the disaggregated analysis of the "pure" policies. In particular, tables 4 and 5 analyse the effects produced on price stabilisation, while tables 6 and 7 refer to the variance of real output. The comparative results between the two "pure" policies are reported in table 8.

These tables provide a number of interesting indicators. The first two rows of tables 4-7 reports the losses for each of the countries (L_{po}^{ob} and L_{po}^{*ob} with *policy* $=i,m$ and *objective* $=p,y$), while the last two give, respectively, the difference in the performance (ΔL_{po}^{ob}) and the overall result (ΣL_{po}^{ob}). Table 8 provides two indicators to compare the policies in terms of variability ($\Delta L_i^{ob} - \Delta L_m^{ob}$) and total loss ($\Sigma L_i^{ob} - \Sigma L_m^{ob}$). Analysing the above tables suggests the following comments.

(i) As regards to price stabilisation (see tables *4* and *5*), in the case of a disturbance in the loan market, the losses always have a symmetric impact across the countries ($\Delta L_i^p = \Delta L_m^p = 0$). With both policy simulations the performances are positively

influenced by the relative importance of the credit channel (v and v^*), while only in the "m" case the losses are a direct function of the elasticity of the demand for money to the interest rate (and so an inverse function of the LM slope). Moreover, the comparison between the losses indicates that, in the case of a loan market shock, the "m" rule is superior to the "i" rule ($\Sigma L_i^p - \Sigma L_m^p > 0$ in table 8).

(ii) The "i" rule insulates perfectly the economies from money demand disturbances ($L_i = L_i^* = 0$), while the "m" rule determines a symmetric loss between the countries. The latter is directly proportional to the "money channel" effectiveness (f) and the sum of the elasticities of loan demand and supply with respect to the spread ($\vartheta_2 = h + q > 0$), while is inversely related to the "credit channel" effectiveness (v and v^*) and the elasticity of the demand for money to the interest rate.

(iii) If the economies are hit by aggregate demand shocks, in both cases the performances are positively influenced by ϑ_2 (an high sensitivity of the credit market to the spread, amplifies the effects of aggregate demand disturbances). Moreover, as already noted in the case of a loan market shock, with the "m" rule losses are a direct function of the elasticity of the demand for money to the interest rate (a).

(iv) The comments reported in (i), (ii) and (iii) can be extended for the consequences on real output (see tables 6 and 7). Considering the Bernanke-Blinder model, where the IS line is replaced with the CC (Commodities and Credit) equilibrium, these results are similar to the classic Poole (1970) findings: in the case of a high variability of the CC curve (shocks in the loan market and the aggregate demand) a money stock supply rule is preferable, while interest rate pegging is superior in the presence of LM disturbances (shocks in money demand).

(v) The intensity of financial and aggregate demand shocks on output depends also on the value of g that represents the elasticity of the AS curve. In particular, if the value of g is greater than one (AS tends to be less steep) losses in output are greater than those in price levels. On the contrary, if $g<1$ (AS tends to become vertical) financial and aggregate demand shocks produce bigger losses in terms of price stabilisation.

(vi) Considering the variance of prices, supply shocks have a symmetric impact between the countries ($\Delta L_i^p = \Delta L_m^p = 0$), while, on the contrary, the results are asymmetric in terms of output stabilisation. In the last case both policy rules have a

Table 4 Effects on price stabilisation of interest rate pegging

	u_{ls} , u_{ld}	u_{ls*} , u_{ld*}	u_{md} , u_{md*}	u_{yd} , u_{yd*}	u_{ys}	u_{ys*}	u_p
L_i^p	$\frac{v^2}{B^2}$	$\frac{v^{*2}}{B^2}$	0	$\frac{\vartheta_2^2}{B^2}$	$\frac{(\vartheta_1\vartheta_2+vw)^2}{B^2}$	$\frac{(\vartheta_1\vartheta_2+v^*w)^2}{B^2}$	$\frac{[\vartheta_2(f+g\vartheta_1)+v^*(1+gw)]^2}{B^2}$
L_i^{*p}	$\frac{v^2}{B^2}$	$\frac{v^{*2}}{B^2}$	0	$\frac{\vartheta_2^2}{B^2}$	$\frac{(\vartheta_1\vartheta_2+vw)^2}{B^2}$	$\frac{(\vartheta_1\vartheta_2+v^*w)^2}{B^2}$	$\frac{[\vartheta_2(f+g\vartheta_1)+v(1+gw)]^2}{B^2}$
$\Delta L_i^p = L_i^p - L_i^{*p}$	0	0	0	0	0	0	$\frac{(v^*-v)(1+gw)}{B}$
$\Sigma L_i^p = L_i^p + L_i^{*p}$	$2\frac{v^2}{B^2}$	$2\frac{v^{*2}}{B^2}$	0	$2\frac{\vartheta_2^2}{B^2}$	$2\frac{(\vartheta_1\vartheta_2+vw)^2}{B^2}$	$2\frac{(\vartheta_1\vartheta_2+v^*w)^2}{B^2}$	$\frac{[\vartheta_2(f+g\vartheta_1)+v^*(1+gw)]^2+[\vartheta_2(f+g\vartheta_1)+v(1+gw)]^2}{B^2}$

where:

$B = 2\vartheta_2(f+g\vartheta_1)+(v+v^*)(1+gw) > 0$

Note: L_i^p and L_i^{*p} represent, respectively, losses of the home and foreign country. ΔL_i^p gives the difference in the performances, while ΣL_i^p is the overall result. The meanings of all the other symbols are reported in the list on page 5.

Table 5 Effects on price stabilisation of money targeting

	u_{ls} , u_{ld}	u_{ls*} , u_{ld*}	u_{md} , u_{md*}	u_{yd} , u_{yd*}	u_{ys}	u_{ys*}	u_p
L_m^p	$\frac{a^2v^2}{F^2}$	$\frac{a^2v^{*2}}{F^2}$	$\frac{f^2\vartheta_2{}^2}{F^2}$	$\frac{a^2\vartheta_2^2}{F^2}$	$\frac{[\vartheta_2(f+a\vartheta_1)+avw]^2}{F^2}$	$\frac{[\vartheta_2(f+a\vartheta_1)+av^*w]^2}{F^2}$	$\frac{[f\vartheta_2(1+a)+g\vartheta_2(f+a\vartheta_1)+ +av^*(1+gw)]^2}{F^2}$
L_m^{*p}	$\frac{a^2v^2}{F^2}$	$\frac{a^2v^{*2}}{F^2}$	$\frac{f^2\vartheta_2{}^2}{F^2}$	$\frac{a^2\vartheta_2^2}{F^2}$	$\frac{[\vartheta_2(f+a\vartheta_1)+avw]^2}{F^2}$	$\frac{[\vartheta_2(f+a\vartheta_1)+av^*w]^2}{F^2}$	$\frac{[f\vartheta_2(1+a)+g\vartheta_2(f+a\vartheta_1)+ +av(1+gw)]^2}{F^2}$
$\Delta L_m^p = L_m^p - L_m^{*p}$	0	0	0	0	0	0	$\frac{a(v^*-v)(1+gw)}{F}$
$\Sigma L_m^p = L_m^p + L_m^{*p}$	$2\frac{a^2v^2}{F^2}$	$2\frac{a^2v^{*2}}{F^2}$	$2\frac{f^2\vartheta_2{}^2}{F^2}$	$2\frac{a^2\vartheta_2^2}{F^2}$	$2\frac{[\vartheta_2(f+a\vartheta_1)+avw]^2}{F^2}$	$2\frac{[\vartheta_2(f+a\vartheta_1)+av^*w]^2}{F^2}$	$\frac{[f\vartheta_2(1+a)+g\vartheta_2(f+a\vartheta_1)+ +av^*(1+gw)]^2+[f\vartheta_2(1+a)+ +g\vartheta_2(f+a\vartheta_1)+av(1+gw)]^2}{F^2}$

where:

$F = 2\vartheta_2[f(1+a)+g(f+a\vartheta_1)]+a(v+v^*)(1+gw)>0$

Note: L_m^p and L_m^{*p} represent, respectively, losses of the home and foreign country. ΔL_m^p gives the difference in the performances, while ΣL_m^p is the overall result. The meanings of all the other symbols are reported in the list on page 5.

Table 6 Consequences on output stabilisation of interest rate pegging

	u_{ls} , u_{ld}	u_{ls*} , u_{ld*}	u_{md} , u_{md*}	u_{yd} , u_{yd*}	u_{ys}	u_{ys*}	u_p
L_i^y	$\frac{g^2 v^2}{B^2}$	$\frac{g^2 v^{*2}}{B^2}$	0	$\frac{g^2 \vartheta_2^2}{B^2}$	$\frac{[\vartheta_2(2f+g\vartheta_1)+v+ +v^*(1+gw)]^2}{B^2}$	$\frac{g^2(\vartheta_1\vartheta_2+v^*w)^2}{B^2}$	$\frac{g^2[\vartheta_2(f+g\vartheta_1)+v^*(1+gw)]^2}{B^2}$
L_i^{*y}	$\frac{g^2 v^2}{B^2}$	$\frac{g^2 v^{*2}}{B^2}$	0	$\frac{g^2 \vartheta_2^2}{B^2}$	$\frac{g^2(\vartheta_1\vartheta_2+vw)^2}{B^2}$	$\frac{[\vartheta_2(2f+g\vartheta_1)+v+ +v(1+gw)]^2}{B^2}$	$\frac{g^2[\vartheta_2(f+g\vartheta_1)+v(1+gw)]^2}{B^2}$
$\Delta L_i^y = L_i^y - L_i^{*y}$	0	0	0	0	$\frac{2f\vartheta_2+v+v^*+ +gw(v^*-v)}{B}$	$\frac{-[2f\vartheta_2+v+v^*+ +gw(v-v^*)]}{B}$	$\frac{g^2(v^*-v)(1+gw)}{B}$
$\Sigma L_i^y = L_i^y + L_i^{*y}$	$2\frac{g^2 v^2}{B^2}$	$2\frac{g^2 v^{*2}}{B^2}$	0	$2\frac{g^2 \vartheta_2^2}{B^2}$	$\frac{[\vartheta_2(2f+g\vartheta_1)+v+ +v^*(1+gw)]^2+ g^2(\vartheta_1\vartheta_2+vw)^2}{B^2}$	$\frac{[\vartheta_2(2f+g\vartheta_1)+v^*+ +v(1+gw)]^2+ g^2(\vartheta_1\vartheta_2+v^*w)^2}{B^2}$	$\frac{g^2\{[\vartheta_2(f+g\vartheta_1)+v^*(1+gw)]^2+ +[\vartheta_2(f+g\vartheta_1)+v(1+gw)]^2\}}{B^2}$

where:

$B = 2\vartheta_2(f+g\vartheta_1)+(v+v^*)(1+gw) > 0$

Note: L_i^y and L_i^{*y} represent, respectively, losses of the home and foreign country. ΔL_i^y gives the difference in the performances, while ΣL_i^y is the overall result. The meanings of all the other symbols are reported in the list on page 5.

Table 7 Consequences on output stabilisation of money targeting

	u_{ls} , u_{ld}	u_{ls*} , u_{ld*}	u_{md} , u_{md*}	u_{yd} , u_{yd*}	u_{ys}	u_{ys*}	u_p
L_m^y	$\frac{a^2g^2v^2}{F^2}$	$\frac{a^2g^2v^{*2}}{F^2}$	$\frac{f^2g^2\vartheta_2}{F^2}$	$\frac{a^2g^2\vartheta_2^2}{F^2}$	$\frac{[2f\vartheta_2(1+a)+g\vartheta_2(f+a\vartheta_1)+a(v+v^*)+agv^*w]^2}{F^2}$	$\frac{g^2[f\vartheta_2(f+a\vartheta_1)+av^*w]^2}{F^2}$	$\frac{g^2[f\vartheta_2(1+a)+g\vartheta_2(f+a\vartheta_1)+av^*(1+gw)]^2}{F^2}$
L_m^{*y}	$\frac{a^2g^2v^2}{F^2}$	$\frac{a^2g^2v^{*2}}{F^2}$	$\frac{f^2g^2\vartheta_2}{F^2}$	$\frac{a^2g^2\vartheta_2^2}{F^2}$	$\frac{g^2[f\vartheta_2(f+a\vartheta_1)+avw]^2}{F^2}$	$\frac{[2f\vartheta_2(1+a)+g\vartheta_2(f+a\vartheta_1)+a(v+v^*)+agvw]^2}{F^2}$	$\frac{g^2[f\vartheta_2(1+a)+g\vartheta_2(f+a\vartheta_1)+av(1+gw)]^2}{F^2}$
$\Delta L_m^y = L_m^y - L_m^{*y}$	0	0	0	0	$\frac{[2f\vartheta_2(1+a)+av(1-gw)+av^*(1+gw)]^2}{F^2}$	$\frac{-[2f\vartheta_2(1+a)+av(1+gw)+av^*(1-gw)]^2}{F^2}$	$\frac{ag^2(v^*-v)(1+gw)}{F}$
$\Sigma L_m^y = L_m^y + L_m^{*y}$	$2\frac{a^2g^2v^2}{F^2}$	$2\frac{a^2g^2v^{*2}}{F^2}$	$2\frac{f^2g^2\vartheta_2}{F^2}$	$2\frac{a^2g^2\vartheta_2^2}{F^2}$	$\frac{[2f\vartheta_2(1+a)+g\vartheta_2(f+a\vartheta_1)+a(v+v^*)+agv^*w]^2+g^2[f\vartheta_2(f+a\vartheta_1)+avw]^2}{F^2}$	$\frac{[2f\vartheta_2(1+a)+g\vartheta_2(f+a\vartheta_1)+a(v+v^*)+agvw]^2+g^2[f\vartheta_2(f+a\vartheta_1)+av^*w]^2}{F^2}$	$\frac{g^2\{[f\vartheta_2(1+a)+g\vartheta_2(f+a\vartheta_1)+av^*(1+gw)]^2+[f\vartheta_2(1+a)++g\vartheta_2(f+a\vartheta_1)+av(1+gw)]\}^2}{F^2}$

where:

$F = 2\vartheta_2[f(1+a)+g(f+a\vartheta_1)]+a(v+v^*)(1+gw) > 0$

Note: L_m^y and L_m^{*y} represent, respectively, losses of the home and foreign country. ΔL_m^y gives the difference in the performances, while ΣL_m^y is the overall result. The meanings of all the other symbols are reported in the list on page 5.

Table 8 A comparison between interest rate pegging and money targeting

	u_{ls} , u_{ld}	u_{ls*} , u_{ld*}	u_{md} , u_{md*}	u_{yd} , u_{yd*}	u_{ys}	u_{ys*}	u_p
$\Delta L_i^p - \Delta L_m^p$	0	0	0	0	0	0	$\frac{2f(1+g)(v^*-v)(1+gw)\vartheta_2}{FB}$
$\Sigma L_i^p - \Sigma L_m^p$	$\frac{8f(1+g)\vartheta_2 v^2[f\vartheta_2(1+g)+2a\vartheta_2(f+g\vartheta_1)+a(v+v^*)(1+gw)]}{F^2B^2}$	$\frac{8f(1+g)\vartheta_2 v^{*2}[f\vartheta_2(1+g)+2a\vartheta_2(f+g\vartheta_1)+a(v+v^*)(1+gw)]}{F^2B^2}$	$\frac{-2f^2\vartheta_2^2}{F^2}$	$\frac{8f(1+g)\vartheta_2^3[f\vartheta_2(1+g)+2a\vartheta_2(f+g\vartheta_1)+a(v+v^*)(1+gw)]}{F^2B^2}$	$\frac{(\vartheta_1\vartheta_2+vw)^2F^2-[\vartheta_2(f+a\vartheta_1)+avw]^2B^2}{F^2B^2}$	$\frac{(\vartheta_1\vartheta_2+v^*w)^2F^2-[\vartheta_2(f+a\vartheta_1)+av^*w]^2B^2]}{F^2B^2}$	$\frac{2f(1+g)(v-v^*)^2(1+gw)^2[f\vartheta_2(1+g)+2a\vartheta_2(f+g\vartheta_1)+a(v+v^*)(1+gw)]}{F^2B^2}$
$\Delta L_i^y - \Delta L_m^y$	0	0	0	0	$\frac{2fg\vartheta_2\{2\vartheta_2(f-\vartheta_1)+v[1-(2+g)w]+v^*(1+gw)\}}{FB}$	$\frac{-2fg\vartheta_2\{2\vartheta_2(f-\vartheta_1)+v^*[1-(2+g)w]+v(1+gw)\}}{FB}$	$\frac{2fg^2(1+g)(v^*-v)(1+gw)\vartheta_2}{F^2B}$
$\Sigma L_i^y - \Sigma L_m^y$	$\frac{8fg^2(1+g)\vartheta_2 v^2[f\vartheta_2(1+g)+2a\vartheta_2(f+g\vartheta_1)+a(v+v^*)(1+gw)]}{F^2B^2}$	$\frac{8fg^2(1+g)\vartheta_2 v^{*2}[f\vartheta_2(1+g)+2a\vartheta_2(f+g\vartheta_1)+a(v+v^*)(1+gw)]}{F^2B^2}$	$\frac{-2f^2g^2\vartheta_2^2}{F^2}$	$\frac{8fg^2(1+g)\vartheta_2^3[f\vartheta_2(1+g)+2a\vartheta_2(f+g\vartheta_1)+a(v+v^*)(1+gw)]}{F^2B^2}$	$\frac{F^2[(B-g\vartheta_1\vartheta_2-gvw)^2+g(\vartheta_1\vartheta_2+vw)^2]+B^2[(F-fg\vartheta_2-ag\vartheta_1\vartheta_2+agvw)^2+g^2(f\vartheta_2+a\vartheta_1\vartheta_2+avw)^2]}{F^2B^2}$	$\frac{F^2[(B-g\vartheta_1\vartheta_2-gv^*w)^2+g(\vartheta_1\vartheta_2+v^*w)^2]+B^2[(F-fg\vartheta_2-ag\vartheta_1\vartheta_2+agv^*w)^2+g^2(f\vartheta_2+a\vartheta_1\vartheta_2+av^*w)^2]}{F^2B^2}$	$\frac{2fg^2(1+g)(v-v^*)^2(1+gw)^2[f\vartheta_2(1+g)+2a\vartheta_2(f+g\vartheta_1)+a(v+v^*)(1+gw)]}{F^2B^2}$

where:

$B = 2\vartheta_2(f+g\vartheta_1)+(v+v^*)(1+gw) > 0$

$F = 2\vartheta_2[f(1+a)+g(f+a\vartheta_1)]+a(v+v^*)(1+gw) > 0$

Note: $\Delta L_i^{ob} - \Delta L_m^{ob}$ represents the difference in variability between the two "pure" policies. $\Sigma L_i^{ob} - \Sigma L_m^{ob}$ is the difference between the total losses. The objective (ob) refers either to prices (p) or output (y) stabilisation. The meanings of all the other symbols are reported in the list on page 5.

similar effect. In particular, supposing an internal supply shock (u_{ys}), $gw<1$ is a sufficient condition to have a relatively higher home country output loss ($\Delta L_i^y > 0$ and $\Delta L_m^y > 0$). Only if $gw>1$ and v is greater than a critical value[9], the conclusion is opposite ($\Delta L_i^y < 0$ and $\Delta L_m^y < 0$). In the case of an external supply shock (u_{ys*}), given that $v>v^*$, the output loss of the foreign country is always bigger. It is worth noting that, in the case of a contemporaneous supply shock ($u_{ys} + u_{ys*}$), the home country output loss is always smaller, with both policy rules.[10]

(vii) In the case of supply shocks, the signs of equations $\Sigma L_i^p - \Sigma L_m^p$ and $\Sigma L_i^y - \Sigma L_m^y$ in table 9 are analysed using numerical methods. In both cases the expressions are highly sensitive to changes in f and g. Figures *1-4* report some of the simulation results carried out where, given $f>v=1>v^*=0.5$, all the elasticities are set to one and $b=0.3$.[11]

(viii) In the case of an internal supply shock, if g is greater than one the difference $\Sigma L_i^p - \Sigma L_m^p$ is positive, giving evidence of the superiority of money targeting versus interest rate pegging (see figure *1a*). On the contrary, if $g<1$ or $f>1$, the difference $\Sigma L_i^p - \Sigma L_m^p$ becomes negative (in the case $f>1$, the difference is always negative and goes to zero only when g tends to infinity, see fig.*1b*). As regards the case of an external supply shock, it is possible to prove that the "*m*" rule is always superior to the "*i*" rule. In fact, figure *2a* shows that as g increases the difference remains negative. This result is confirmed also by the simulation represented in figure *2b*, where f is also allowed to vary.

(ix) In considering output losses, the conclusions are different only in the case of an internal supply shock. In fact, a value of $1<g<15$ implies $\Sigma L_i^y - \Sigma L_m^y < 0$ giving evidence of superiority of interest rate pegging with respect to money targeting (see

---

[9] The expressions for the critical values are $v > \dfrac{2f\vartheta_2 + v^*(1+gw)}{gw-1}$, in the case of interest rate pegging, and $v > \dfrac{2f\vartheta_2(1+a) + av^*(1+gw)}{a(gw-1)}$, in the case of a money stock supply rule.

[10] In fact, in this case the differences in output losses are, respectively, $\Delta L_i^y = \dfrac{2g(v^* - v)}{B} < 0$ and $\Delta L_m^y = \dfrac{2agw(v^* - v)}{F} < 0$.

[11] It is worth noting that by using different coefficients, the simulations have always confirmed the same conclusions.

figure *3a*). On the contrary, if $f>3$, independently from g (see figure *3b*), the difference $\Sigma L_i^y - \Sigma L_m^y$ is always positive and the "*m*" rule is preferable.[12] In the case of an external supply shock, the money stock supply policy is always superior to the "*i*" rule (see fig. *4a* and *4b*).

(x) A "price-wedge" shock produces an asymmetric effect between the countries. Given the assumption $v>v^*$, the foreign country is always penalised whether in terms of price stabilisation or the variance of real output ($\Delta L_i^p = L_i^p - L_i^{*p} < 0$, $\Delta L_m^p = L_m^p - L_m^{*p} < 0$, $\Delta L_i^y = L_i^y - L_i^{*y} < 0$ and $\Delta L_m^y = L_m^y - L_m^{*y} < 0$). In both policy simulations, the absolute values of the differences in the loss levels are a direct function of $(v-v^*)$, g and w. The first term represents the different effectiveness of the "credit channel" in the two countries. If $v=v^*$ a symmetric situation is restored, while the overall losses are minimised only when $v=v^*=0$ (the presence of "credit channels" amplifies the effects of "regional" price differences). The second coefficient, which represents the elasticity of aggregate supply with respect to prices, implies that $|\Delta L_i^p|$, $|\Delta L_m^p|$, $|\Delta L_i^y|$ and $|\Delta L_i^m|$ are bigger in the case of price rigidity. The third parameter (w), that represents the elasticity of loan demand with respect to output, is linked with g in a multiplicative way and amplifies its effect. Moreover, in the case of a "pure" money stock rule, the differences $|\Delta L_m^p|$ and $|\Delta L_m^y|$ are also positively influenced by the elasticity of money demand with respect to the interest rate on bonds.

(xi) In the case of a "price-wedge" shock, the comparison between the two "pure" policies shows that interest rate pegging is superior to money targeting in terms of minimisation of the asymmetric effect between the two countries ($\Delta L_i^p - \Delta L_m^p < 0$ and $\Delta L_i^y - \Delta L_m^y < 0$ in table 8). This means that, even if the foreign country is always penalised with respect to the home country, interest rate pegging produces a smaller variability between the results. On the contrary, an "*m*" rule is preferable in terms of minimisation of the overall losses ($\Sigma L_i^p - \Sigma L_m^p > 0$ and $\Sigma L_i^y - \Sigma L_m^y > 0$).

In order to provide a conclusive comparison between the two "pure" policy rules, numerical methods are used to calculate the difference between the overall effects when

---

[12] This result can be generalised to all cases where f is approximately three times the value of the other elasticities.

the economies are hit by all the disturbances. In particular, $P = \Sigma L_i^p - \Sigma L_m^p$ represents the total effect in terms of price stabilisation and is given by the sum of the elements on the second row of table 8, while $Y = \Sigma L_i^y - \Sigma L_m^y$, calculated as the sum of the elements in the fourth row of table 8, indicates the overall effect in terms of the variance of real income.

Using a unit elasticity hypothesis and the constraints imposed by the model ($f>v>v^*$), both P and Y are highly sensitive to changes in the parameters f, g and $\vartheta_2 = h + q$.[13] This property can be explained by the fact that high values of these parameters tend to amplify the stabilising effects of the "*i*" rule in the cases of money demand and output supply shocks (in all other cases, as discussed above, the "*m*" rule is certainly superior). Moreover, P and Y are influenced by the relative importance and the overall effectiveness of the "credit channel" (respectively, $|v - v^*|$ and $v+v^*$).

The total result in terms of price stabilisation (P) shows that a money stock supply rule is always superior to an interest rate pegging only if f and ϑ_2 are relatively low (see figure *5a*). On the contrary, when the product $f\vartheta_2$ assumes high values, the insulation of money demand disturbances becomes relevant with respect to all other shocks. Given the value of f and ϑ_2, an increase in g tends to reduce the absolute value of P to zero. This means that in the case of an infinite elasticity of output supply with respect to the price level, the two monetary rules tend to reach a similar performance (see fig. *5b* and *5c*). Moreover, the value of P reacts positively to an increase in the relative importance $|v - v^*|$ and overall effectiveness ($v+v^*$) of the "credit channel". In fact, starting from an initial situation characterised by $v=1>v^*=0.5$, $v-v^*=0.5$ and $v+v^*=1.5$ (see fig. *5d*), an increase in the difference ($v-v^*=1.5$) with a constant sum (see fig. *5e*), and an increase in the sum ($v+v^*=2.5$) with a constant difference (see fig. *5f*) determine an increase in the convenience of the "*m*" rule.

Considering output stabilisation, the "*m*" rule is always superior to the "*i*" rule. In fact, figure *6a* shows that, also if the product between the parameters f and ϑ_2 assumes high values, $Y = \Sigma L_i^y - \Sigma L_m^y$ is always positive. In this case, g (see fig. *6b* and *6c*) and

---

[13] Also in this case it is worth noting that the same conclusions have been obtained by carrying out a complete set of simulations using different range for the coefficients.

$|v - v^*|$ (compare fig. *6d* to *6e*) also raise the absolute value of Y, while the latter reacts negatively to an increase in $v+v^*$ (compare fig. *6d* to *6f*).

As regards the asymmetric effects between the countries, the results in terms of output stabilisation are different from those regarding the variance of price levels. Summing the values on the third row of table 8, it is possible to obtain $\Delta L_i^y - \Delta L_m^y = \frac{2fg(1+g)\vartheta_2(v^* - v)(g + 2w + g^2 w)}{BF} < 0$ that implies a smaller difference between the output of the countries in the case of interest rate pegging. Nevertheless, it is possible to show that the foreign country (the most penalised) is always better off with an "*m*" rule. In fact, comparing the result of the foreign country in the two cases (difference between the sum of the second row of table *6* and the sum of the second row of table 7), the loss in the "*i*" case is always bigger ($\Sigma L_i^{*y} - \Sigma L_m^{*y} > 0$, see fig.*7*). So, even if with an interest rate pegging the difference between the countries is less pronounced, a money stock supply rule represents always a "Pareto" improvement.

On the other hand, the conclusion is not unique in terms of price stabilisation. The result on the first row of table 8, as already discussed in (xi), shows that the "*i*" rule is superior to the "*m*" rule in terms of minimisation of the asymmetric effect between the two countries. In this case, comparing the result of the foreign country in the two cases (difference between the sum of the second row of table *4* and the sum of the second row of table 5), the loss in the "*i*" case is bigger only for low values of f and ϑ_2 (see fig. *8*).

The main conclusions of this section can be summed up as follows. If the primary objective of the area-wide monetary authority is the maintenance of price stability, a money stock supply rule is preferable with respect to interest rate pegging, except in the case of a money demand shock associated with *(i)* a high sensitivity of loan demand and supply with respect to the spread and *(ii)* a high effectiveness of the "money channel". In the latter case the "*m*" rule also causes a higher asymmetry between the price levels of the countries. The consequence regarding output stabilisation is unique: the "*m*" rule minimises always the variance of the real output at the area-level.

Figure 1 Simulations of $\Sigma L_i^p - \Sigma L_m^p$ in the case of an internal supply shock

(a)

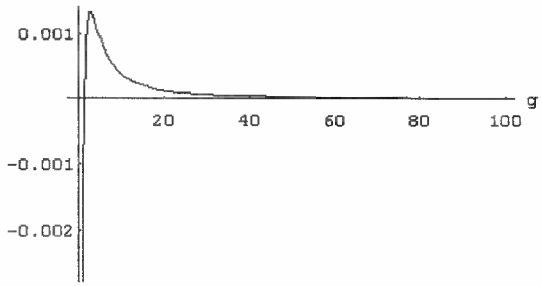

$a = 1, \vartheta_1 = 1\text{-}b = 0.7, \mathrm{f} = 1, \vartheta_2 = h + q = 2, v = 1,$
$v^* = 0.5, w = 1,\ z = 1$ and $0 < g < 100$

(b)

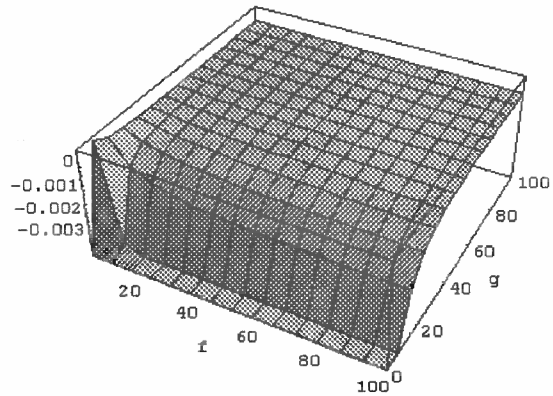

$a = 1, \vartheta_1 = 1\text{-}b = 0.7, \vartheta_2 = h + q = 2, v = 1,$
$v^* = 0.5, w = 1,\ z = 1,\ 1 < f < 100$ and $0 < g < 100$

Figure 2 Simulations of $\Sigma L_i^p - \Sigma L_m^p$ in the case of an external supply shock

(a)

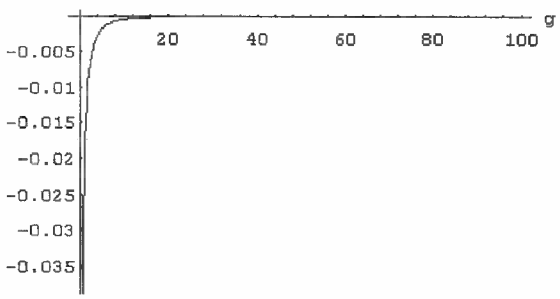

$a = 1, \vartheta_1 = 1\text{-}b = 0.7, \mathrm{f} = 1, \vartheta_2 = h + q = 2, v = 1,$
$v^* = 0.5, w = 1,\ z = 1$ and $0 < g < 100$

(b)

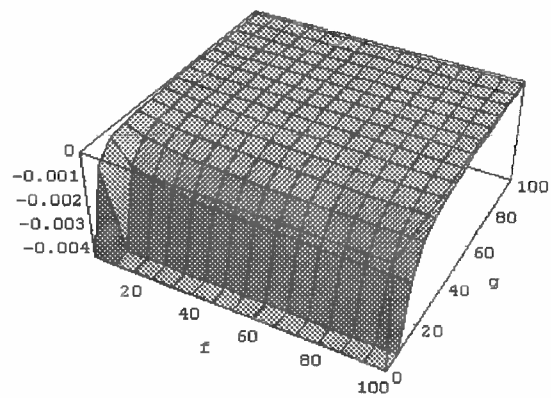

$a = 1, \vartheta_1 = 1\text{-}b = 0.7, \vartheta_2 = h + q = 2, v = 1,$
$v^* = 0.5, w = 1,\ z = 1,\ 1 < f < 100$ and $0 < g < 100$

Figure 3 Simulations of $\Sigma L_i^y - \Sigma L_m^y$ in the case of an internal supply shock

(a)

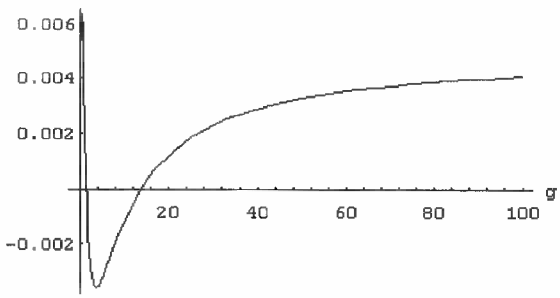

$a = 1, \vartheta_1 = 1\text{-}b = 0.7, \mathrm{f} = 1, \vartheta_2 = h + q = 2, v = 1,$
$v^* = 0.5, w = 1,\ z = 1$ and $0 < g < 100$

(b)

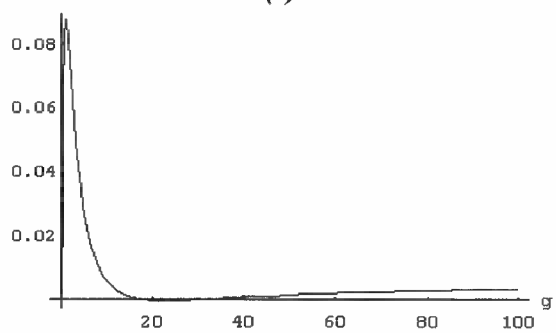

$a = 1, \vartheta_1 = 1\text{-}b = 0.7, \mathrm{f} = 3, \vartheta_2 = h + q = 2, v = 1,$
$v^* = 0.5, w = 1,\ z = 1$ and $0 < g < 100$

Figure 4 Simulations of $\Sigma L_i^y - \Sigma L_m^y$ in the case of an external supply shock

(a)

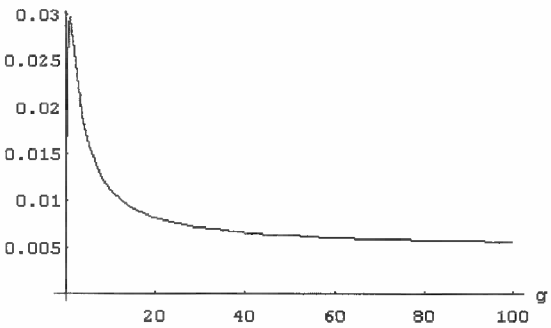

$a = 1, \vartheta_1 = 1\text{-}b = 0.7, \mathrm{f} = 1, \vartheta_2 = h + q = 2, v = 1,$
$v^* = 0.5, w = 1,\ z = 1$ and $0 < g < 100$

(b)

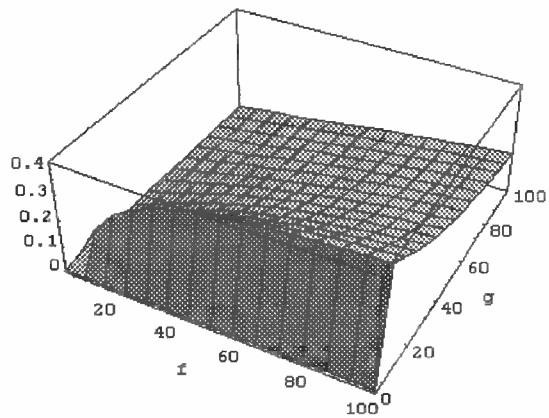

$a = 1, \vartheta_1 = 1\text{-}b = 0.7, \vartheta_2 = h + q = 2, v = 1, v^* = 0.5,$
$w = 1,\ z = 1,\ 1 < f < 100$ and $0 < g < 100$

Figure 5 Simulations of $P = \Sigma L_i^p - \Sigma L_m^p$ in the case of all shocks

(a)

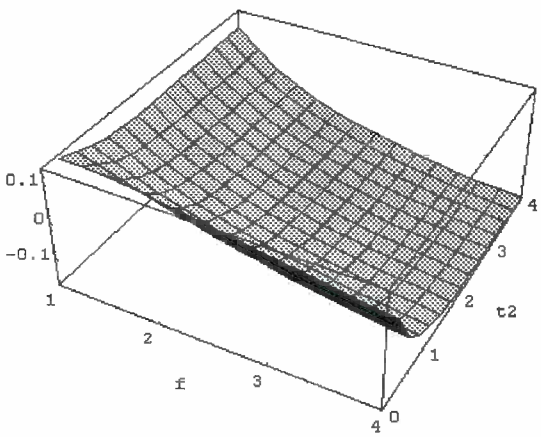

$a = 1, \vartheta_1 = 1\text{-}b = 0.7,\ \mathrm{g} = 1, v = 1, v^* = 0.5,$
$w = 1,\ z = 1,\ 1 < f < 4$ and $0 < \vartheta_2 < 4$

(b)

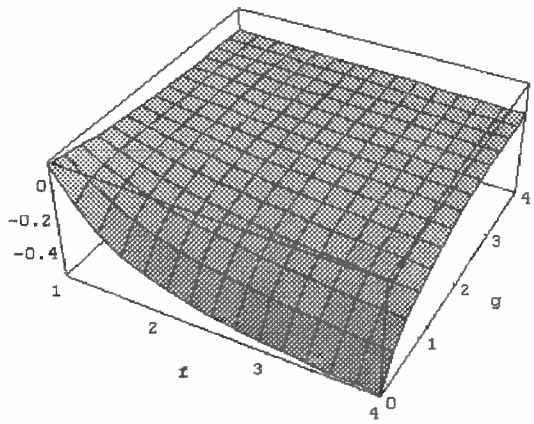

$a = 1, \vartheta_1 = 1\text{-}b = 0.7, \vartheta_2 = h + q = 2, v = 1,$
$v^* = 0.5, w = 1,\ z = 1,\ 1 < f < 4$ and $0 < g < 4$

(c)

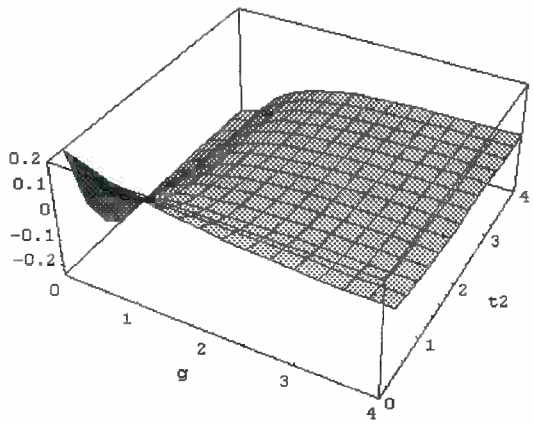

$a = 1, \vartheta_1 = 1\text{-}b = 0.7, f = 2, v = 1, v^* = 0.5,$
$w = 1,\ z = 1,\ 0 < g < 4$ and $0 < \vartheta_2 < 4$

(d)

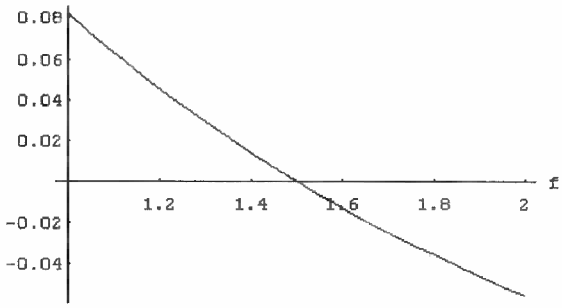

$a = 1, \vartheta_1 = 1\text{-}b = 0.7, f = 2, \vartheta_2 = 2, v = 1,$
$v^* = 0.5, w = 1,\ z = 1$ and $1 < f < 2$

(e)

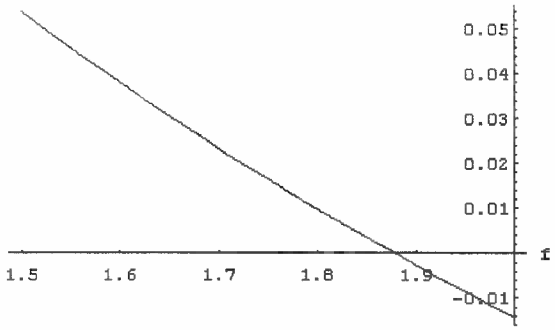

$a = 1, \vartheta_1 = 1\text{-}b = 0.7, f = 2, \vartheta_2 = 2, v = 1.5,$
$v^* = 0, w = 1,\ z = 1$ and $1.5 < f < 2$

(f)

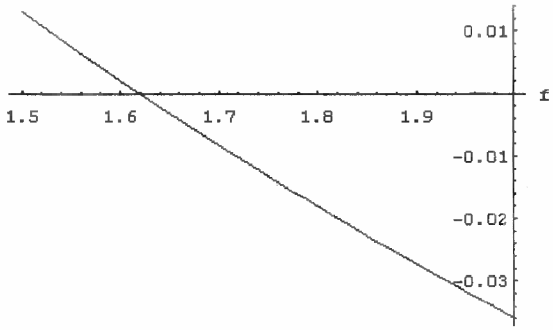

$a = 1, \vartheta_1 = 1\text{-}b = 0.7, f = 2, \vartheta_2 = 2, v = 1.5,$
$v^* = 1, w = 1,\ z = 1$ and $1.5 < f < 2$

Figure 6 Simulations of $Y = \Sigma L_i^y - \Sigma L_m^y$ in the case of all shocks

(a)

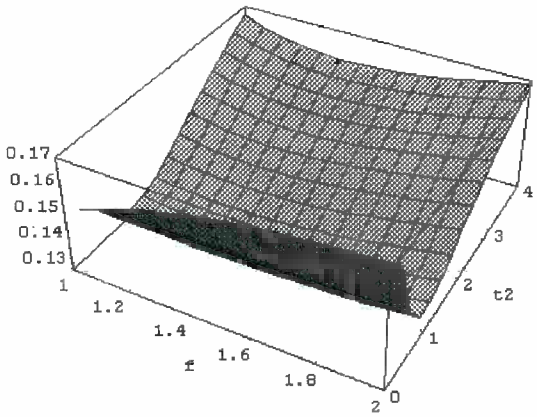

$a = 1, \vartheta_1 = 1\text{-}b = 0.7, g = 1, v = 1,$
$v^* = 0.5, w = 1,\ z = 1,\ 1 < f < 2$ and $0 < \vartheta_2 < 4$

(b)

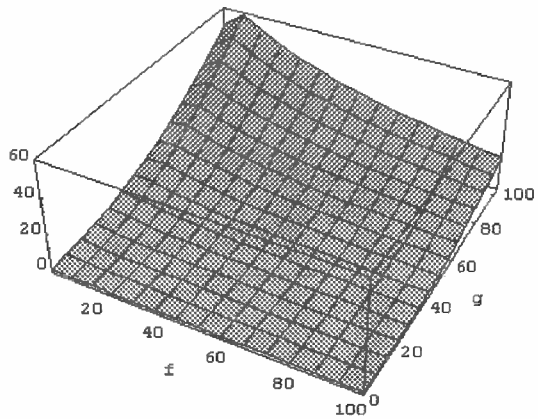

$a = 1, \vartheta_1 = 1\text{-}b = 0.7, \vartheta_2 = h + q = 2, v = 1,$
$v^* = 0.5, w = 1,\ z = 1,\ 1 < f < 100$ and $0 < g < 100$

(c)

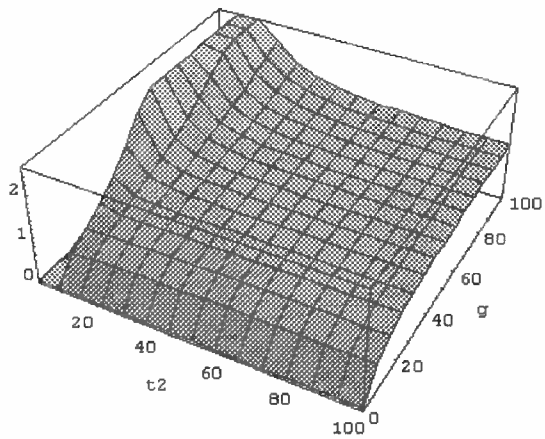

$a = 1, \vartheta_1 = 1\text{-}b = 0.7, f = 2, v = 1,\ v^* = 0.5,$
$w = 1,\ z = 1,\ 0 < \vartheta_2 < 100$ and $0 < g < 100$

(d)

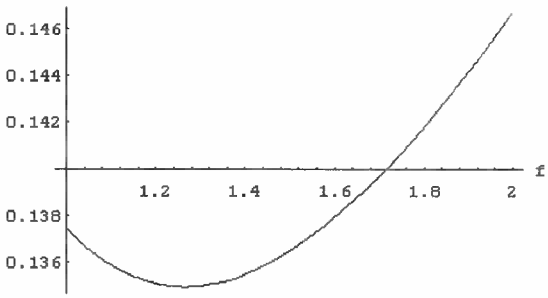

$a = 1, \vartheta_1 = 1\text{-}b = 0.7, f = 2, \vartheta_2 = 2, v = 1,$
$v^* = 0.5, w = 1,\ z = 1$ and $1 < f < 2$

(e)

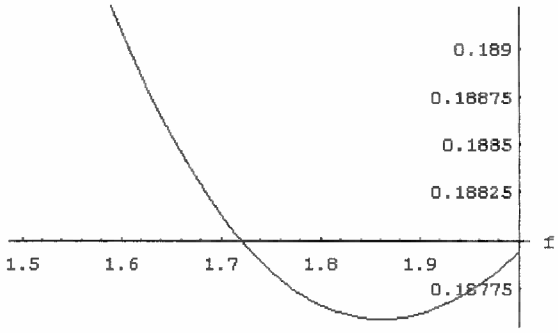

$a = 1, \vartheta_1 = 1 - b = 0.7, f = 2, \vartheta_2 = 2, v = 1.5,$
$v^* = 0, w = 1,\ z = 1$ and $1.5 < f < 2$

(f)

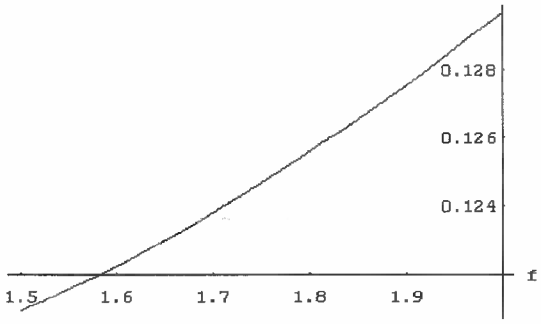

$a = 1, \vartheta_1 = 1 - b = 0.7, f = 2, \vartheta_2 = 2, v = 1.5,$
$v^* = 1, w = 1,\ z = 1$ and $1.5 < f < 2$

Figure 7 Simulations of $Y = \Sigma L_i^{*y} - \Sigma L_m^{*y}$ in the case of all shocks

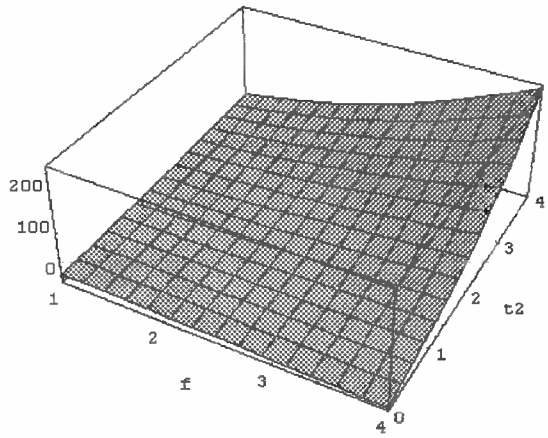

$a = 1, \vartheta_1 = 1 - b = 0.7,\ g = 1, v = 1, v^* = 0.5, w = 1,\ z = 1,$
$1 < f < 4$ and $0 < \vartheta_2 < 4$

Figure 8 Simulations of $P = \Sigma L_i^{*p} - \Sigma L_m^{*p}$ in the case of all shocks

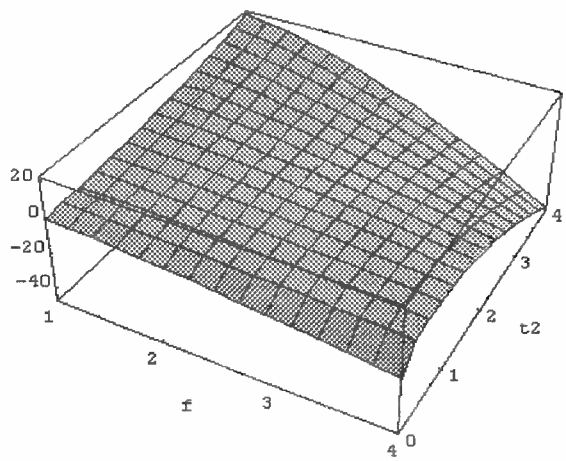

$a = 1, \vartheta_1 = 1 - b = 0.7, g = 1, v = 1, v^* = 0.5, w = 1,\ z = 1,$
$1 < f < 4$ and $0 < \vartheta_2 < 4$

6. The optimal monetary policy *à la* Poole

The properties of the optimal monetary instrument k can be investigated using implicit differentiation of the objective function (11). The response of the optimal monetary instrument to all kinds of shocks is reported in table 5.

In the case of a disturbance of the credit market or output demand (wherever they occur), k is modified in order to increase the slope of the *LM* curve (in particular, if a is relatively low the optimal rule can be approximated using money targeting). On the other hand, the predominance of money demand shocks calls for interest rate pegging (the *LM* curve is horizontal).

If the economy is hit by an internal supply shock the sign of the derivative depends on the expression $2\vartheta_2(f-\vartheta_1)+v[1-(2+g)w]+v^*(1+gw)$.

Sufficient conditions for this expression to be positive are:

(15) $\vartheta_1 = 1 - b < f$ and $w < 1/(2+g)$,

which are fulfilled in the case of *(i)* an effective "money channel" *(ii)* a high interrelation between the economies and *(iii)* a low elasticity of money demand with respect to income. On the other hand, if $w > 1/(2+g)$, a sufficient condition for $\frac{\partial k}{\partial \sigma^2_{uys}}$ to be negative is:

(16) $v > \frac{2\vartheta_2(f-\vartheta_1)}{(2+g)w-1} + \frac{1+gw}{(2+g)w-1}v^*$.

In the case of an external shock, given $v > v^*$, $\frac{\partial k}{\partial \sigma^2_{uys^*}}$ is more likely to be positive. In fact, the sufficient conditions for the coefficient to be greater than zero become

(17) $\vartheta_1 = 1 - b < f$ *and* $w < 1$,

while it is negative if $w > 1$ and $v^* > \frac{2\vartheta_2(f-\vartheta_1)}{(2+g)w-1} + \frac{1+gw}{(2+g)w-1}v$.

Only in the case of a "price-wedge" shock, does the optimal policy instrument depend on the importance attached to the stabilisation of the second group of countries (α). If $\alpha \geq 1$ (that includes the symmetric case), the sign of $\frac{\partial k}{\partial \sigma^2_{up}}$ is negative, implying that k moves towards money targeting. On the other hand, if the quorum of countries with a more effective "credit channel" becomes larger and

$0 < \alpha < \dfrac{f\vartheta_2(f-\vartheta_1)+v^*(1+gw)}{f\vartheta_2(f-\vartheta_1)+v(1+gw)} < 1$, the value of $\dfrac{\partial k}{\partial \sigma^2_{up}}$ turns to be positive and k tends to increase.

To analyse the consequences of the optimal monetary rule k (referred to prices) for output stabilisation, the same procedure has been applied to the variance of real income (see equation 12). The results, reported in table 6, show that in the case of financial (credit and money markets) and aggregate demand shocks, k is optimal also in terms of output.

Table 5 The properties of the optimal monetary policy *k*

$$\text{sign}\frac{\partial k}{\partial \sigma^2_{uls}} = \text{sign}\frac{\partial k}{\partial \sigma^2_{uld}} = -\text{sign}[\frac{(2a+k)v}{\Delta}\frac{4f(1+g)\vartheta_2 v}{\Delta^2}] < 0$$

$$\text{sign}\frac{\partial k}{\partial \sigma^2_{uls*}} = \text{sign}\frac{\partial k}{\partial \sigma^2_{uld*}} = -\text{sign}[\frac{(2a+k)v^*}{\Delta}\frac{4f(1+g)\vartheta_2 v^*}{\Delta^2}] < 0$$

$$\text{sign}\frac{\partial k}{\partial \sigma^2_{umd}} = \text{sign}\frac{\partial k}{\partial \sigma^2_{umd*}} = -\text{sign}[\frac{-2f\vartheta_2}{\Delta}\frac{2f\vartheta_2[2\vartheta_2(f+g\vartheta_1)+(v+v^*)(1+gw)]}{\Delta^2}] > 0$$

$$\text{sign}\frac{\partial k}{\partial \sigma^2_{uyd}} = \text{sign}\frac{\partial k}{\partial \sigma^2_{uyd*}} = -\text{sign}[\frac{(2a+k)\vartheta_2}{\Delta}\frac{4f\vartheta_2^2(1+gw)}{\Delta^2}] < 0$$

$$\text{sign}\frac{\partial k}{\partial \sigma^2_{uys}} = -\text{sign}[\frac{-[2f\vartheta_2+(\vartheta_1\vartheta_2+vw)(2a+k)]}{\Delta}\frac{2f\vartheta_2\{2\vartheta_2(f-\vartheta_1)+ +v[1-(2+g)w]+v^*(1+gw)\}}{\Delta^2}]$$

$$\text{sign}\frac{\partial k}{\partial \sigma^2_{uys*}} = -\text{sign}[\frac{-[2f\vartheta_2+(\vartheta_1\vartheta_2+v^*w)(2a+k)]}{\Delta}\frac{2f\vartheta_2\{2\vartheta_2(f-\vartheta_1)+ +v^*[1-(2+g)w]+v(1+gw)]}{\Delta^2}]$$

$$\text{sign}\frac{\partial k}{\partial \sigma^2_{up}} = -\text{sign}[\frac{(1-\alpha)f\vartheta_2(1+g\vartheta_1)+ +(v^*-av)(1+gw)}{\Delta}\frac{2f\vartheta_2(1+\alpha)(1+g)(v^*-v)(1+gw)}{\Delta^2}]$$

where:

$$\Delta = (2a+k)[2(f+g\vartheta_1)\vartheta_2+(v+v^*)(1+gw)]+4f\vartheta_2(1+g) > 0$$

$$0 < \vartheta_1 = 1-b < 1 \quad \text{and} \quad \vartheta_2 = h+q > 0$$

Table 6 The effects of the optimal monetary policy *k* on output stabilisation

$$\text{sign}\frac{\partial k}{\partial \sigma^2_{uls}} = \text{sign}\frac{\partial k}{\partial \sigma^2_{uld}} = -\text{sign}[\frac{(2a+k)gv}{\Delta}\frac{4fg(1+g)\vartheta_2 v}{\Delta^2}] < 0$$

$$\text{sign}\frac{\partial k}{\partial \sigma^2_{uls*}} = \text{sign}\frac{\partial k}{\partial \sigma^2_{uld*}} = -\text{sign}[\frac{(2a+k)gv^*}{\Delta}\frac{4fg(1+g)\vartheta_2 v^*}{\Delta^2}] < 0$$

$$\text{sign}\frac{\partial k}{\partial \sigma^2_{umd}} = \text{sign}\frac{\partial k}{\partial \sigma^2_{umd*}} = -\text{sign}[\frac{-2fg\vartheta_2}{\Delta}\frac{2fg\vartheta_2[2\vartheta_2(f+g\vartheta_1)+(v+v^*)(1+gw)]}{\Delta^2}] > 0$$

$$\text{sign}\frac{\partial k}{\partial \sigma^2_{uyd}} = \text{sign}\frac{\partial k}{\partial \sigma^2_{uyd*}} = -\text{sign}[\frac{(2a+k)g\vartheta_2}{\Delta}\frac{4fg\vartheta_2^2(1+gw)}{\Delta^2}] < 0$$

$$\text{sign}\frac{\partial k}{\partial \sigma^2_{uys}} = -\text{sign}[\frac{\begin{array}{l}2(1+\alpha)fg\vartheta_2^2\{2\vartheta_2(f-\vartheta_1)+v[1-(2+g)w]+v^*(1+gw)\}\{-\alpha g[2f\vartheta_2+\\+(2a+k)(\vartheta_1\vartheta_2+vw)]+[2f\vartheta_2(2+g)+(2a+k)(2f\vartheta_2+g\vartheta_1\vartheta_2+v+\\+v^*(1+gw)]\}\end{array}}{\Delta^3}]$$

$$\text{sign}\frac{\partial k}{\partial \sigma^2_{uys*}} = -\text{sign}[\frac{\begin{array}{l}2(1+\alpha)fg\vartheta_2^2\{2\vartheta_2(f-\vartheta_1)+v^*[1-(2+g)w]+v(1+gw)\}\{-g[2f\vartheta_2+\\+(2a+k)(\vartheta_1\vartheta_2+v^*w)]+\alpha[2f\vartheta_2(2+g)+(2a+k)(2f\vartheta_2+g\vartheta_1\vartheta_2+\\+v^*+v(1+gw)]\}\end{array}}{\Delta^3}]$$

$$\text{sign}\frac{\partial k}{\partial \sigma^2_{up}} = -\text{sign}[\frac{\begin{array}{l}(1-\alpha)g\vartheta_2[2f(1+g)+(2a+k)(f+g\vartheta_1)]+\\+g(v^*-av)(1+gw)(2a+k)\end{array}}{\Delta}\frac{\begin{array}{l}2fg\vartheta_2(1+\alpha)(1+g)(v^*-v)\\(1+gw)\end{array}}{\Delta^2}]$$

where:

$$\Delta = (2a+k)[2(f+g\vartheta_1)\vartheta_2+(v+v^*)(1+gw)]+4f\vartheta_2(1+g) > 0$$

$$0 < \vartheta_1 = 1-b < 1 \quad \text{and} \quad \vartheta_2 = h+q > 0$$

In the remaining cases the sign of the derivatives depends upon different conditions. In particular, both supply shocks also depend on α. In the case of an internal supply shock, the sufficient conditions for $\frac{\partial k}{\partial \sigma^2_{uys}}$ to be positive are given not only by (15) but

also by $0 < \alpha < \dfrac{2f\vartheta_2(2+g)+(2a+k)[(2f+g\vartheta_1)\vartheta_2+v+v^*(1+gw)]}{g[2f\vartheta_2+(2a+k)(\vartheta_1\vartheta_2+vw)]} > 1$. This means that if the economies with a more effective "credit channel" are hit by an internal supply shock and their weight reaches a critical value, it is more convenient to move towards an interest rate pegging.

In the case of an external supply shock, the sufficient conditions for $\dfrac{\partial k}{\partial \sigma^2_{uys*}} > 0$ are given by (17) and $0 < \alpha > \dfrac{g[2f\vartheta_2+(2a+k)(\vartheta_1\vartheta_2+v^*w)]}{2f\vartheta_2(2+g)+(2a+k)[(2f+g\vartheta_1)\vartheta_2+v(1+gw)+v^*]} < 1$: a move towards interest rate pegging is convenient only in the presence of a sufficient number of countries with a less effective "credit channel".

With a "price-wedge" shock, the main conclusions for the optimal policy instrument (in relation to prices) are maintained and $\alpha \geq 1$ implies a steeper *LM* ($\dfrac{\partial k}{\partial \sigma^2_{up}} < 0$). The only difference is that the critical quorum of countries with a more effective "credit channel" that turns the derivative to be positive is given by the following condition: $0 < \alpha < \dfrac{2f\vartheta_2(1+g)+(2a+k)[\vartheta_2(f+g\vartheta_1)+v^*(1+gw)}{2f\vartheta_2(1+g)+(2a+k)[\vartheta_2(f+g\vartheta_1)+v(1+gw)} < 1$.

Following the solution method described in Modigliani and Papademos (1990), it is possible to find the analytical expression for the optimal monetary rule in the symmetric case ($\alpha=1$): [14]

$$(18)\quad \frac{m_t'}{i_t} = \frac{\begin{array}{l} 4f\vartheta_2 C_1(\sigma^2_{umd}+\sigma^2_{umd*}+\sigma^2_{uys}+\sigma^2_{uys*})+2aC_2C_3[4v^2(\sigma^2_{uls}+\sigma^2_{uld})+ \\ +4v^{*2}(\sigma^2_{uls*}+\sigma^2_{uld*})+4\vartheta_2^2(\sigma^2_{uyd}+\sigma^2_{uyd*})+4(\vartheta_1\vartheta_2+vw)^2\sigma^2_{uys}+ \\ +4(\vartheta_1\vartheta_2+v^*w)^2\sigma^2_{uys*}+(1+gw)^2(v^*-v)^2\sigma^2_{up}] \end{array}}{\begin{array}{l} 2z[v+c(v^*-v)]C_1(\sigma^2_{umd}+\sigma^2_{umd*}+\sigma^2_{uys}+\sigma^2_{uys*})+C_2C_3[4v^2(\sigma^2_{uls}+ \\ +\sigma^2_{uld})+4v^{*2}(\sigma^2_{uls*}+\sigma^2_{uld*})+4\vartheta_2^2(\sigma^2_{uyd}+\sigma^2_{uyd*})+4(\vartheta_1\vartheta_2+vw)^2\sigma^2_{uys}+ \\ +4(\vartheta_1\vartheta_2+v^*w)^2\sigma^2_{uys*}+(1+gw)^2(v^*-v)^2\sigma^2_{up}] \end{array}}$$

---

[14] In synthesis this approach consists of: *(i)* calculating a number of partial equilibria equal to the number of policy variables to control; *(ii)* using a linear combination of the equations obtained in *(i)* to define the combination policy; *(iii)* rewriting this combination policy in terms of the objective variables and disturbances; *(iv)* minimising this new expression with respect to the policy instruments and substituting the results in *(ii)*, obtaining the analytical expression of the optimal policy rule.

where:

$$C_1 = (1+g)^2$$
$$C_2 = 2f\vartheta_2 + v + v^*$$
$$C_3 = [2\vartheta_2(f + g\vartheta_1) + (v + v^*)(1 + gw)]^2$$

and c represents the proportion of money distributed to the foreign country.

Expression (18) provides the following insights on the characteristic of the optimal feedback rule.

(i) The ratio $0<\frac{m_t'}{i_t}<\infty$ lies in an interval that includes the situations of vertical *LM* ($i_t=\infty$), money targeting ($m_t' = 0$) and interest rate pegging ($i_t = 0$).[15]

(ii) Given m_t', the proportion of money distributed between the two countries (*1-c* and *c*) influences the optimal policy rule only in the case of money demand and output supply shocks. In both cases, given $v^*-v<0$, an increase in the quantity of money distributed to the foreign country, which has a less effective "credit channel", determines a move towards interest rate pegging (when *c* increases also $\frac{m_t'}{i_t}$ rises) and vice versa.

(iii) In the case of a money demand shock the ratio becomes $\frac{m_t'}{i_t} = \frac{2f\vartheta_2}{z[v + c(v^* - v)]}$.

The intuition behind this condition can be explained using the *CC-LM* and *AD-AS* framework referred to the whole union. In fact, the result depends on the slope of the *CC* (influenced by f and ϑ_2)[16] and the sensitivity of the *CC* to a change in the money stock (z). The case in favour of interest rate pegging is when f and ϑ_2 are high (*CC* is almost horizontal), while z is low (the supply of credit does not react to a change in m' and *CC* is fixed).

(iv) If the economies are hit by a disturbance in the credit market or output demand (both shocks move the *CC* curve horizontally), the optimal rule depends on the slope of the *LM* curve. In fact, equation (18) collapses to $\frac{m_t'}{i_t} = 2a$ and the feedback rule

---

[15] Using the money supply process described by equation (2'), these three situations are reached setting the value of k, respectively to $-2a$, 0, and ∞.

[16] In the simple symmetric case ($v = v^* = \bar{v}$), the slope of the *CC* curve is given by: $\frac{di}{d(y+y^*)} = -\frac{1}{2f}[\vartheta_1 + \frac{\bar{v}w}{\vartheta_2}]$

depends on money demand elasticity with respect to the interest rate. For example, if the latter is low and *LM* becomes rigid, monetary targeting is preferable.

(v) Also with "price-wedge" shocks, the optimal rule depends on the condition $\frac{m_t'}{i_t} = 2a$, and the same conclusion expressed in (iv) is valid. Nevertheless the nature of the result is different because the wedge in price influences the national aggregate demands also through the "money channel". In particular, these effects move in opposite directions with the same intensity (f is common) and the overall result on output demand for the union does not change.

(vi) In the case of an internal supply shock the optimal monetary rule becomes $\frac{m_t'}{i_t} = \frac{4f\vartheta_2 C_1 + 8aC_2C_3(\vartheta_1\vartheta_2 + vw)^2}{2z[v + c(v^* - v)]C_1 + 4C_2C_3(\vartheta_1\vartheta_2 + vw)^2}$. Given the complexity of the formula, only differential calculus with respect to each parameter can explain the characteristic of the feedback rule. In particular, it is possible to prove that $\frac{m_t'}{i_t} = \phi(\underset{+}{a}, \underset{+}{c}, \underset{-}{f}, \underset{-}{g}, \underset{+}{\vartheta_1}, \underset{-}{\vartheta_2}, \underset{-}{z})$. As expected a monetary targeting rule is preferable when the absolute value of the slopes of *LM* (influenced by a) and *CC* (influenced by f, ϑ_1 and ϑ_2) are high. Also the effect of a rigid *AS* (g low) is better insulated moving towards a money stock rule. These conclusions can be extended also in the case of an external supply shock, when the optimal rule becomes $\frac{m_t'}{i_t} = \frac{4f\vartheta_2 C_1 + 8aC_2C_3(\vartheta_1\vartheta_2 + v^*w)^2}{2z[v + c(v^* - v)]C_1 + 4C_2C_3(\vartheta_1\vartheta_2 + v^*w)^2}$. The only difference between an internal and an external supply shock is represented by the conditions under which the optimal rule moves towards interest rate pegging. In particular, these conditions depend upon the asymmetric effectiveness of the credit channel ($v > v^*$) and imply that the value of $\frac{m_t'}{i_t}$ is more likely to be big if the supply shock hit the country that has a relatively more effective "credit channel" (the expressions of the critical value were provided in Section 5).

7. An alternative money supply process based on the spread

The aim of this section is to analyse a different money supply process, which uses the spread between the interest rates on loans and bonds as a feedback variable. The intuition

behind this policy simulation is that the spread could embody more information about current shocks than the interest rate on bonds. From an analytical point of view this statement can be explained using the following reformulation of money supply process (2'):

$$(19) \qquad m' = (m_t + m_t^*)^s = m_t + m_t^* - x\frac{\tilde{\rho}_t + \tilde{\rho}_t^*}{2}$$

based on the average spread between the two countries. Using the spread definition, equation (19) is equivalent to $m' = (m_t + m_t^*)^s = m_t + m_t^* - \frac{x}{2}\rho_t - \frac{x}{2}\rho_t^* + x\, i_t$ and implicitly assumes that the money stock is regulated not only by the interest rate on bonds, but also by national interest rates on loans.[17]

Imposing *(i)* a non negative *LM* slope ($\frac{xw + 2\vartheta_2}{4a\vartheta_2}$), *(ii)* a well behaved real balance effect (when prices increase *LM* intercept rises) and *(iii)* a positive effect of money on prices (quantitative theory), the value of the policy instrument x will lie in the following interval:

$$(20) \qquad min\,[\,-\frac{2\vartheta_2}{w}, -2\vartheta_2,\ -\frac{2av}{f}] < x < \infty,$$

which includes the "pure" policies of money targeting ($x=0$) and average spread pegging ($x=\infty$).[18] In particular, the last case can be interpreted as a way to reduce, on the one hand, credit market imperfections (a spread reduction means that the cost of capital supplied by banks tends to equalise the cost of financing in the bond market) and, on the other hand, differences between the credit systems of the two countries.[19]

Using equation (19) to solve the model, the reduced form reported in table 9 can be obtained. This solution, given condition (20), has the same characteristics of that of the

---

[17] It is worth noting that, in this simple case, there is only one policy instrument (x) which determines different weights among the financial variables. In particular, the feedback coefficient attached to the (common) interest rate is doubled with respect to the national interest rates. Generally, it is possible to hypothesise different cases, nested in the equation $m' = (m_t + m_t^*)^s = m_t + m_t^* - x_1\rho_t - x_2\rho_t^* + x_3\, i_t$ where x_1, x_2 and x_3 are policy instruments jointly chosen by the monetary authority to minimise its objective function.

[18] The sign of the influence that the spread has on the money supply stock depends on the nature of the shock and cannot be established *a priori*. For example, an increase in the spread could be caused by an autonomous reduction in loan supply (which implies the necessity of an "easy" money policy) or an increase in loan demand (which calls for a "tight" monetary policy).

[19] It is implicitly assumed that the spread cannot be negative (a sensible assumption considering "monitoring" and "screening" costs). In this case the average spread tends to zero only if both national spreads converge to zero.

Table 9: Reduced form of the model with the money supply process based on the spread

(21) $p_t = A_0 m + A_1 m^* + A_2(u_{ls} - u_{ld}) + A_3(u_{ls*} - u_{ld*}) + A_4(u_{md} + u_{md*}) + A_5(u_{yd} + u_{yd*}) + A_6 u_{ys} + A_7 u_{ys*} + A_8 u_p$

(22) $p_t^* = B_0 m + B_1 m^* + B_2(u_{ls} - u_{ld}) + B_3(u_{ls*} - u_{ld*}) + B_4(u_{md} + u_{md*}) + B_5(u_{yd} + u_{yd*}) + B_6 u_{ys} + B_7 u_{ys*} + B_8 u_p$

(23) $y_t = C_2(u_{ls} - u_{ld}) + C_3(u_{ls*} - u_{ld*}) + C_4(u_{md} + u_{md*}) + C_5(u_{yd} + u_{yd*}) + C_6 u_{ys} + C_7 u_{ys*} + C_8 u_p$

(24) $y_t^* = D_2(u_{ls} - u_{ld}) + D_3(u_{ls*} - u_{ld*}) + D_4(u_{md} + u_{md*}) + D_5(u_{yd} + u_{yd*}) + D_6 u_{ys} + D_7 u_{ys*} + D_8 u_p$

where:

$A_0 = B_0 = [2f\vartheta_2 + (cf + 2av)z] / \{2[cf + 2f\vartheta_2(1+a) + a(v+v^*)]\} > 0$

$A_1 = B_1 = [2f\vartheta_2 + (cf + 2av^*)z] / \{2[cf + 2f\vartheta_2(1+a) + a(v+v^*)]\} > 0$

$A_2 = B_2 = (cf + 2av) / \Delta > 0$

$A_3 = B_3 = (cf + 2av^*) / \Delta > 0$

$A_4 = B_4 = (-2f\vartheta_2) / \Delta < 0$

$A_5 = B_5 = 2a\vartheta_2 / \Delta > 0$

$A_6 = B_6 = -[2\vartheta_2(f + a\vartheta_1) + w(cf + 2av)] / \Delta < 0$

$A_7 = B_7 = -[2\vartheta_2(f + a\vartheta_1) + w(cf + 2av^*)] / \Delta < 0$

$A_8 = \{(1+gw)(cf + 2av^*) + 2\vartheta_2[f(1+a) + g(f + a\vartheta_1)]\} / \Delta > 0$

$B_8 = -\{(1+gw)(cf + 2av) + 2\vartheta_2[f(1+a) + g(f + a\vartheta_1)]\} / \Delta < 0$

$\Delta = [cf + a(v+v^*)](1+gw) + 2\vartheta_2[f(1+a) + g(f + a\vartheta_1)] > 0$

$0 < \vartheta_1 = 1 - b < 1$ and $\vartheta_2 = h + q > 0$

$C_0 = C_1 = D_0 = D_1 = 0$

$C_2 = D_2 = g(cf + 2av) / \Delta > 0$

$C_3 = D_3 = g(cf + 2av^*) / \Delta > 0$

$C_4 = D_4 = (-2fg\vartheta_2) / \Delta < 0$

$C_5 = D_5 = 2ag\vartheta_2 / \Delta > 0$

$C_6 = \{cf(2+gw) + 2\vartheta_2[2f(1+a) + g(f + a\vartheta_1)] + 2a[v + v^*(1+gw)]\} / \Delta > 0$

$C_7 = -g[2\vartheta_2(f + a\vartheta_1) + w(cf + 2av^*)] / \Delta < 0$

$C_8 = g\{(cf + 2av^*)(1+gw) + 2\vartheta_2[f(1+a) + g(f + a\vartheta_1)]\} / \Delta > 0$

$D_6 = -g[2\vartheta_2(f + a\vartheta_1) + w(cf + 2av)] / \Delta < 0$

$D_7 = \{cf(2+gw) + 2\vartheta_2[2f(1+a) + g(f + a\vartheta_1)] + 2a[v(1+gw) + v^*]\} / \Delta > 0$

$D_8 = -g\{2f\vartheta_2(1+g) + [f\vartheta_2 + g\vartheta_1\vartheta_2 + v(1+g)](2a+k)\} / \Delta < 0$

model with the money supply process based on the interest rate on bonds (see comments (i)-(x) in Section 2).

As a first step of the analysis, it is interesting to study the performance (in terms of price and output stabilisation) of the "pure" policy rule based on spread pegging (hereafter "s" rule).

Setting all the variances of the disturbances to one and an equal weight on the two countries in the objective function (symmetric case, $\alpha=1$), the results reported in tables *10* and *11* are obtained.[20] The first two rows of these tables report the losses for each of the countries ($L_{\tilde{\rho}}^{ob}$ and $L_{\tilde{\rho}}^{*ob}$ with *objective* =*p, y*), while the last two give, respectively, the difference between the performances ($\Delta L_{\tilde{\rho}}^{ob}$) and the overall result ($\Sigma L_{\tilde{\rho}}^{ob}$).

An examination of these tables suggests the following comments.

(i) Since average spread pegging insulates the economies from the asymmetric effects of national credit market imperfections on output demand, welfare losses are not influenced by the "credit channels" (v and v^* do not enter any equations).

(ii) In the case of price stabilisation (see table *10*), as a consequence of *(i)*, a disturbance on the loan market (wherever it occurs) has always the same impact between the countries. Moreover, losses are an inverse function of g (so they increase when the *AS* slope rises) and w (price stabilisation is easier when the elasticity of loan demand with respect to output is high).

(iii) The "*s*" rule insulates perfectly the economies from money demand and aggregate demand disturbances ($L_{\tilde{\rho}} = L_{\tilde{\rho}}^{*} = 0$). This result represents, on the one hand, an indication of the superiority of spread versus interest rate pegging (in fact, the latter insulates the economies only from money demand shocks) and, on the other hand, an extension to classic Poole findings (in the case of *IS* and *LM* shocks, spread pegging is always superior to money targeting).

(iv) The comments reported in *(i)*, *(ii)* and *(iii)* are valid also for the consequences for real output (see table *11*). The only difference is that in this case welfare losses are positively related to g: the steeper is the *AS*, the less are the losses in terms of output stabilisation (the opposite is valid considering the variance of prices). In particular, if the

[20] The loss functions are worked out using equations (13) and (13'). In particular, the coefficients are obtained taking the limits, for x that tends to infinity, of the parameters of the model in table 9.

Table 10 Effects on price stabilisation of spread pegging

	u_{ls} , u_{ld}	u_{ls*} , u_{ld*}	u_{md} , u_{md*}	u_{yd} , u_{yd*}	u_{ys}	u_{ys*}	u_p
$L_{\tilde{\rho}}^{p}$	$\frac{1}{G^2}$	$\frac{1}{G^2}$	0	0	$\frac{w^2}{G^2}$	$\frac{w^2}{G^2}$	$\frac{1}{4}$
$L_{\tilde{\rho}}^{*p}$	$\frac{1}{G^2}$	$\frac{1}{G^2}$	0	0	$\frac{w^2}{G^2}$	$\frac{w^2}{G^2}$	$\frac{1}{4}$
$\Delta L_{\tilde{\rho}}^{p} = L_{\tilde{\rho}}^{p} - L_{\tilde{\rho}}^{*p}$	0	0	0	0	0	0	0
$\Sigma L_{\tilde{\rho}}^{p} = L_{\tilde{\rho}}^{p} + L_{\tilde{\rho}}^{*p}$	$\frac{2}{G^2}$	$\frac{2}{G^2}$	0	0	$2\frac{w^2}{G^2}$	$2\frac{w^2}{G^2}$	$\frac{1}{2}$

where:
$G = 2(1 + gw) > 0$

Note: $L_{\tilde{\rho}}^{p}$ and $L_{\tilde{\rho}}^{*p}$ represent, respectively, losses of the home and foreign country. $\Delta L_{\tilde{\rho}}^{p}$ gives the difference in the performances, while $\Sigma L_{\tilde{\rho}}^{p}$ is the overall result. The meanings of all the other symbols are reported in the list on page 5.

Table 11 Consequences on output stabilisation of spread pegging

	u_{ls} , u_{ld}	u_{ls*} , u_{ld*}	u_{md} , u_{md*}	u_{yd} , u_{yd*}	u_{ys}	u_{ys*}	u_p
$L^y_{\tilde{\rho}}$	$\frac{g^2}{G^2}$	$\frac{g^2}{G^2}$	0	0	$\frac{(2+gw)^2}{G^2}$	$\frac{g^2w^2}{G^2}$	$\frac{g^2}{4}$
$L^{*y}_{\tilde{\rho}}$	$\frac{g^2}{G^2}$	$\frac{g^2}{G^2}$	0	0	$\frac{g^2w^2}{G^2}$	$\frac{(2+gw)^2}{G^2}$	$\frac{g^2}{4}$
$\Delta L^y_{\tilde{\rho}} = L^y_{\tilde{\rho}} - L^{*y}_{\tilde{\rho}}$	0	0	0	0	$\frac{4(1+gw)}{G^2}$	$-\frac{4(1+gw)}{G^2}$	0
$\Sigma L^y_{\tilde{\rho}} = L^y_{\tilde{\rho}} + L^{*y}_{\tilde{\rho}}$	$\frac{2g^2}{G^2}$	$\frac{2g^2}{G^2}$	0	0	$2\frac{(2+2gw+g^2w^2)}{G^2}$	$2\frac{(2+2gw+g^2w^2)}{G^2}$	$\frac{g^2}{2}$

where:
$G = 2(1+gw) > 0$

Note: $L^y_{\tilde{\rho}}$ and $L^{*y}_{\tilde{\rho}}$ represent, respectively, losses of the home and foreign country. $\Delta L^y_{\tilde{\rho}}$ gives the difference in the performances, while $\Sigma L^y_{\tilde{\rho}}$ is the overall result. The meanings of all the other symbols are reported in the list on page 5.

value of g is less than one (AS has a slope bigger than one), output losses are smaller than that in terms of price levels (cf. also (iv) in Section 5).

(v) As regards price stabilisation, supply shocks (wherever they occur) always have the same impact across the countries, but in contrast to (ii) they are a direct function of w (the variance of prices caused by a supply shock is large if the elasticity of loan demand with respect to output is high). On the contrary, the results are asymmetric in terms of output stabilisation. In particular, the country where the supply shock occurs suffers the worst impact.

(vi) A "price-wedge" shock always produces a symmetric effect between the countries, whether in terms of price or output stabilisation. However, as already pointed out in (iv), the latter is bigger than the former if $g>1$.

8. A comparative analysis between spread pegging and money targeting

The next step of the analysis consists of comparing spread pegging to money targeting in terms of variability ($\Delta L^{ob}_{\tilde{\rho}} - \Delta L^{ob}_{m}$) and total loss ($\Sigma L^{ob}_{\tilde{\rho}} - \Sigma L^{ob}_{m}$). Since these indicators are equal to those used in table 8, also a comparative analysis between spread and interest pegging can be carried out (this means comparing performances which have been normalised with respect to money targeting results). The main implications derived from the results reported in table *12* are the following.

(i) In addition to the cases of shocks in money demand and aggregate demand, spread pegging is also superior to money targeting if the economies are hit by "price-wedge" disturbances ($\Sigma L^{p}_{\tilde{\rho}} - \Sigma L^{p}_{m} < 0$ and $\Sigma L^{y}_{\tilde{\rho}} - \Sigma L^{y}_{m} < 0$). In particular, the comparative advantage is a direct function of the absolute value of the difference between the two "credit channels" $|v - v^*|$ and tends to zero in the symmetric case ($v = v^*$).

(ii) In all other cases the conclusions depend on the values of certain parameters. Numerical methods are used to provide an indication of results (see fig. *9-13*)[21]. In the case of an internal loan market shock, the sign of expressions $\Sigma L^{p}_{\tilde{\rho}} - \Sigma L^{p}_{m}$ and $\Sigma L^{y}_{\tilde{\rho}} - \Sigma L^{y}_{m}$ are sensitive to w, $v - v^*$ and $v + v^*$. In particular, money targeting is preferable when the elasticity of loan demand with respect to income is relatively low

[21] The same criteria described in section 5 for the previous simulations have been used.

Table 12 A comparison between spread pegging and money targeting

	u_{ls} , u_{ld}	u_{ls*} , u_{ld*}	u_{md} , u_{md*}	u_{yd} , u_{yd*}	u_{ys}	u_{ys*}	u_p
$\Delta L^p_{\tilde{p}} - \Delta L^p_m$	0	0	0	0	0	0	$\frac{a(v^* - v)(1+gw)}{F}$
$\Sigma L^p_{\tilde{p}} - \Sigma L^p_m$	$\frac{2F^2 - 2a^2v^2G^2}{F^2G^2}$	$\frac{2F^2 - 2a^2v^{*2}G^2}{F^2G^2}$	$\frac{-2f^2\vartheta_2^2}{F^2}$	$\frac{-2a^2\vartheta_2^2}{F^2}$	$\frac{2wF^2 - 2[\vartheta_2(f + a\vartheta_1) + +avw]^2G^2}{F^2G^2}$	$\frac{2wF^2 - 2[\vartheta_2(f + a\vartheta_1) + +av^*w]^2G^2}{F^2G^2}$	$\frac{-a^2(1+gw)^2(v - v^*)^2}{2F^2}$
$\Delta L^y_{\tilde{p}} - \Delta L^y_m$	0	0	0	0	$\frac{4(1+gw)F^2 - [2f\vartheta_2(1+a) + +av(1-gw) + av^*(1+gw)]G^2}{F^2G^2}$	$\frac{-4(1+gw)F^2 + [2f\vartheta_2(1+a) + +av(1+gw) + av^*(1-gw)]G^2}{F^2G^2}$	$\frac{4ag^2(v - v^*)(1+gw)^3}{FG^2}$
$\Sigma L^y_{\tilde{p}} - \Sigma L^y_m$	$\frac{g^2[2F^2 - 2a^2v^2G^2]}{F^2G^2}$	$\frac{g^2[2F^2 - 2a^2v^{*2}G^2]}{F^2G^2}$	$\frac{-2f^2g^2\vartheta_2^2}{F^2}$	$\frac{-2a^2g^2\vartheta_2^2}{F^2}$	$\frac{2F^2(2 + 2gw + g^2w^2) + -G^2[(F - fg\vartheta_2 - ag\vartheta_1\vartheta_2 + -agvw)^2 + g^2(f\vartheta_2 + +a\vartheta_1\vartheta_2 + avw)^2]}{F^2G^2}$	$\frac{2F^2(2 + 2gw + g^2w^2) + -G^2[(F - fg\vartheta_2 - ag\vartheta_1\vartheta_2 + -agv^*w)^2 + g^2(f\vartheta_2 + +a\vartheta_1\vartheta_2 + av^*w)^2]}{F^2G^2}$	$\frac{-a^2g^2(1+gw)^2(v - v^*)^2}{2F^2}$

where:

$F = 2\vartheta_2[f(1+a) + g(f + a\vartheta_1)] + a(v + v^*)(1+gw) > 0$

$G = 2(1+gw) > 0$

Note: $\Delta L^{ob}_{\tilde{p}} - \Delta L^{ob}_m$ represents the difference in variability between the two "pure" policies. $\Sigma L^{ob}_{\tilde{p}} - \Sigma L^{ob}_m$ is the difference between the total losses. The objective (ob) refers either to prices (p) or output (y) stabilisation. The meanings of all the other symbols are reported in the list on page 5.

(see fig. *9a*). An increase in the difference between the "credit channels" (see fig. *9b*) and their absolute value (see fig. *9c*) reduce the relative preference for the "*m*" rule. In the case of a disturbance in the loan market of the foreign country, given $v - v^* > 0$, $\Sigma L^p_{\tilde{\rho}} - \Sigma L^p_m$ and $\Sigma L^y_{\tilde{\rho}} - \Sigma L^y_m$ are always positive and money targeting is always superior. Moreover, it is worth noting that when *g* increases, $\Sigma L^p_{\tilde{\rho}} - \Sigma L^p_m$ tends to zero (the two losses go to zero with the same velocity), while the absolute value of $\Sigma L^y_{\tilde{\rho}} - \Sigma L^y_m$ rises at a decreasing rate (there is a horizontal asymptote for *g* tending to infinity).

(iii) When the economies are hit by supply shocks the conclusions are different with respect to the target variables. Considering price stabilisation, in the case of an internal supply shock, the sign of the expression $\Sigma L^p_{\tilde{\rho}} - \Sigma L^p_m$ is positive only for values of *w* inside a given interval (see fig. *10a*). This interval shrinks substantially if the difference between the national credit channels ($v - v^*$) increases (see fig *10b*), while it expands slightly if their absolute importance ($v + v^*$) rises (see fig. *10c*). In the case of an external supply shock, given $v - v^* > 0$, $\Sigma L^p_{\tilde{\rho}} - \Sigma L^p_m$ is always positive and the "*m*" rule is preferred. Considering output stabilisation, the conclusions are different. In the case of an internal supply shock, $\Sigma L^y_{\tilde{\rho}} - \Sigma L^y_m$ is positive not only for a low value of *w*, but also for values inside a given interval (see fig. *11a*). This interval is again sensitive to $v - v^*$ (see fig. *11b*) and $v + v^*$ (see fig.*11c*) variations. In the case of an external supply shock, $\Sigma L^y_{\tilde{\rho}} - \Sigma L^y_m$ is always negative and spread pegging is superior to money targeting.

To provide a general comparison between spread pegging and money targeting, the same procedure applied in section 5 has been used to calculate the difference between the total effects when the economies are hit by all shocks. In particular, $P = \Sigma L^p_{\tilde{\rho}} - \Sigma L^p_m$ represents the overall effect in terms of price stabilisation and is given by the sum of the elements on the second row of table 12, while $Y = \Sigma L^y_{\tilde{\rho}} - \Sigma L^y_m$, calculated as the sum of the elements on the fourth row of the same table, indicates the total effect in term of the variance of real income. The main insights are the following.

Figure 9 Simulations of $\Sigma L^p_{\tilde{\rho}} - \Sigma L^p_m$ in the case of an internal credit market shock

(a)

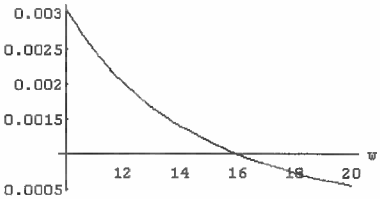

$a = 1, \vartheta_1 = 1 - b = 0.7, f = 2,$
$\vartheta_2 = h + q = 2, v = 1, v^* = 0.5,$
$g = 1,\ z = 1$ and $10 < w < 20$

(b)

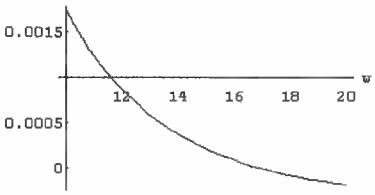

$a = 1, \vartheta_1 = 1 - b = 0.7, f = 2,$
$\vartheta_2 = h + q = 2, v = 1.5, v^* = 0,$
$g = 1,\ z = 1$ and $10 < w < 20$

(c)

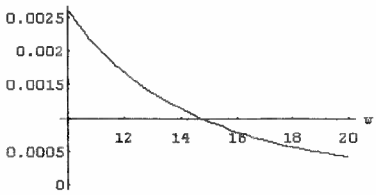

$a = 1, \vartheta_1 = 1 - b = 0.7, f = 2,$
$\vartheta_2 = h + q = 2, v = 1.5, v^* = 1,$
$g = 1,\ z = 1$ and $10 < w < 20$

Figure 10 Simulations of $\Sigma L^p_{\tilde{\rho}} - \Sigma L^p_m$ in the case of an internal supply shock

(a)

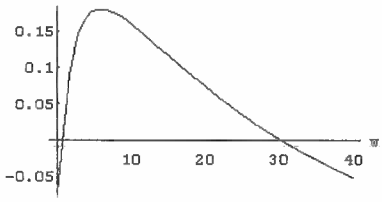

$a = 1, \vartheta_1 = 1 - b = 0.7, f = 2,$
$\vartheta_2 = h + q = 2, v = 1, v^* = 0.5,$
$g = 1,\ z = 1$ and $0 < w < 40$

(b)

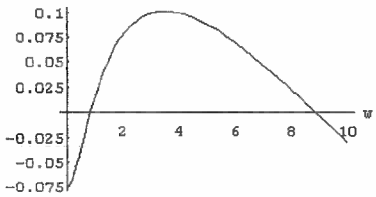

$a = 1, \vartheta_1 = 1 - b = 0.7, f = 2,$
$\vartheta_2 = h + q = 2, v = 1.5, v^* = 0,$
$g = 1,\ z = 1$ and $0 < w < 10$

(c)

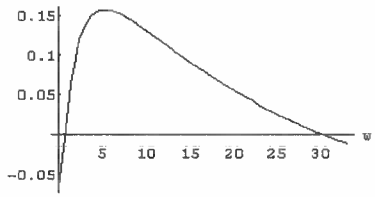

$a = 1, \vartheta_1 = 1 - b = 0.7, f = 2,$
$\vartheta_2 = h + q = 2, v = 1.5, v^* = 1,$
$g = 1,\ z = 1$ and $0 < w < 33$

Figure 11 Simulations of $\Sigma L^y_{\tilde{\rho}} - \Sigma L^y_m$ in the case of an internal supply shock

(a)

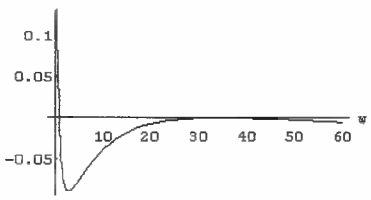

$a = 1, \vartheta_1 = 1 - b = 0.7, f = 2,$
$\vartheta_2 = h + q = 2, v = 1, v^* = 0.5,$
$g = 1,\ z = 1$ and $0 < w < 60$

(b)

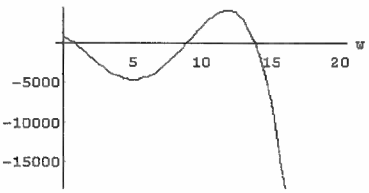

$a = 1, \vartheta_1 = 1 - b = 0.7, f = 2,$
$\vartheta_2 = h + q = 2, v = 1.5, v^* = 0,$
$g = 1,\ z = 1$ and $0 < w < 20$

(c)

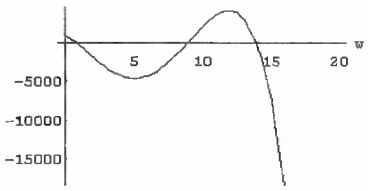

$a = 1, \vartheta_1 = 1 - b = 0.7, f = 2,$
$\vartheta_2 = h + q = 2, v = 1.5, v^* = 1,$
$g = 1,\ z = 1$ and $0 < w < 20$

(iv) The sign of P is highly sensitive to changes in w. This property can be explained by the fact that high values of this parameter tend to amplify the stabilising effects of the "s" rule in the cases of internal disturbances in the loan market and aggregate supply. Considering price stabilisation, spread pegging is superior to money targeting only when the elasticity of loan demand with respect to income is very high (see fig. *12a*). Increased variation in the importance size of the "credit channel" across countries $|v-v^*|$, amplifies this result (see fig. *12b*), while an increase in this channel's overall effectiveness ($v+v^*$) moves in the opposite direction (see fig. *12c*). It is worth noting that if $w=1$ (a result likely to hold in the long term), money targeting is preferred even in cases where spread pegging is otherwise favoured (including disturbances in money demand (high values of f and ϑ_2), aggregate demand (high values of a and ϑ_2) and "price-wedge" (high values of a and $|v-v^*|$)). This means that even if the "m" rule does not perfectly insulate the economies from *IS* and *LM* disturbances, welfare loss (in terms of price stabilisation) is relatively low with respect to the advantages in the cases of *AS* and credit market shocks. However, it is worth noting that the two policy rules are equivalent for g tending to infinity (horizontal *AS*) when $P = \Sigma L^p_{\tilde{\rho}} - \Sigma L^p_m = 0$.

(v) The sign of the total result in terms of output stabilisation (Y) depends on w in this case as well, but the critical value to prefer spread pegging is lower than in the case of price stabilisation (see fig. *13a*). An increase in the difference between the "credit channels" $|v-v^*|$ raises the relative advantage of spread pegging (see fig. *13b*), while larger overall effectiveness ($v+v^*$) moves in the opposite direction (see fig. *13c*). Setting $w=1$, the simulations carried out to increase the comparative advantage of spread pegging in the cases of disturbances in money demand (high values of f and ϑ_2), aggregate demand (high values of a and ϑ_2) and "price-wedge" (high values of a and $|v-v^*|$), give different results with respect to (iv). In particular, for high values of a and f the difference tends to become negative (see fig.*13d*), calling for spread pegging, while a high value of ϑ_2 moves in the opposite direction. Moreover, it is worth noting that the relative advantage of spread pegging increases when the *AS* becomes more horizontal ($\lim_{g\to\infty} Y = \Sigma L^y_{\tilde{\rho}} - \Sigma L^y_m = -\infty$)

(vi) As regards the asymmetric effects between the countries, the results in terms of both prices and output stabilisation are in favour of spread pegging. In fact, summing the

Figure 12 Simulations of $P = \Sigma L_{\tilde{\rho}}^{*p} - \Sigma L_{m}^{*p}$ in the case of all shocks

(a)

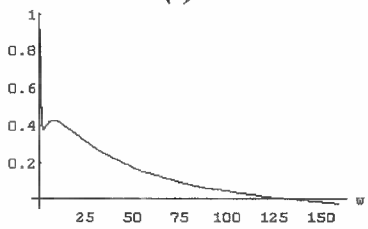

$a = 1, \vartheta_1 = 1\text{-}b = 0.7, \mathrm{f} = 2,$
$\vartheta_2 = h + q = 2, v = 1, v^* = 0.5,$
$g = 1,\ z = 1$ and $0 < w < 160$

(b)

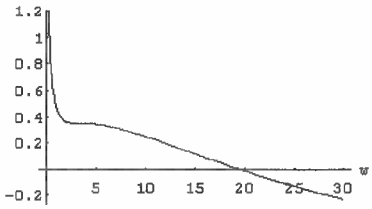

$a = 1, \vartheta_1 = 1\text{-}b = 0.7, \mathrm{f} = 2,$
$\vartheta_2 = h + q = 2, v = 1.5, v^* = 0,$
$g = 1,\ z = 1$ and $0 < w < 30$

(c)

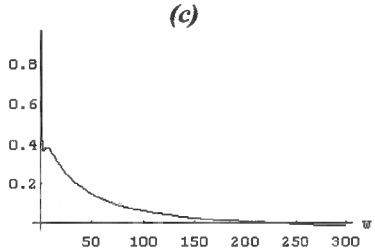

$a = 1, \vartheta_1 = 1\text{-}b = 0.7, \mathrm{f} = 2,$
$\vartheta_2 = h + q = 2, v = 1.5, v^* = 1,$
$g = 1,\ z = 1$ and $0 < w < 300$

Figure 13 Simulations of $Y = \Sigma L_{\tilde{\rho}}^{*y} - \Sigma L_{m}^{*y}$ in the case of all shocks

(a)

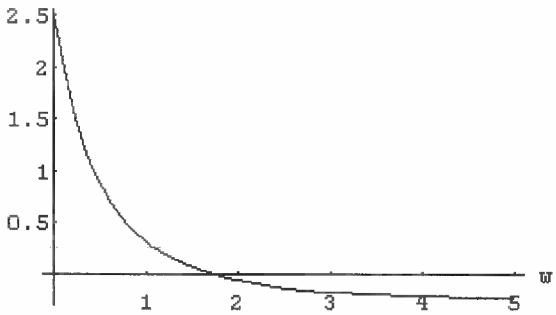

$a = 1, \vartheta_1 = 1\text{-}b = 0.7, \mathrm{f} = 2, \vartheta_2 = h + q = 2, v = 1,$
$v^* = 0.5, g = 1,\ z = 1$ and $0 < w < 5$

(b)

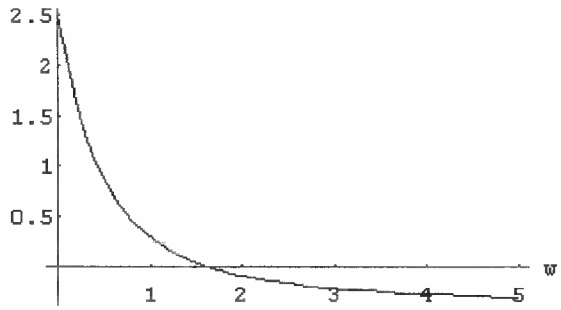

$a = 1, \vartheta_1 = 1\text{-}b = 0.7, \mathrm{f} = 2, \vartheta_2 = h + q = 2, v = 1.5,$
$v^* = 0, g = 1,\ z = 1$ and $0 < w < 5$

(c)

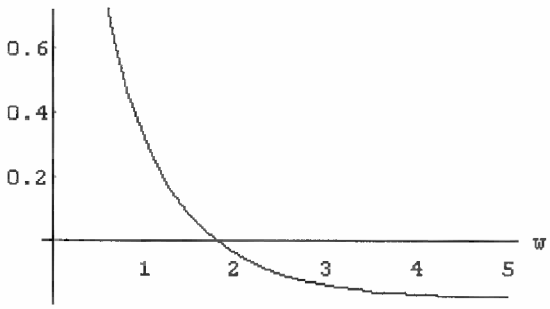

$a = 1, \vartheta_1 = 1\text{-}b = 0.7, \mathrm{f} = 2, \vartheta_2 = h + q = 2, v = 1.5,$
$v^* = 1, g = 1,\ z = 1$ and $0 < w < 5$

(d)

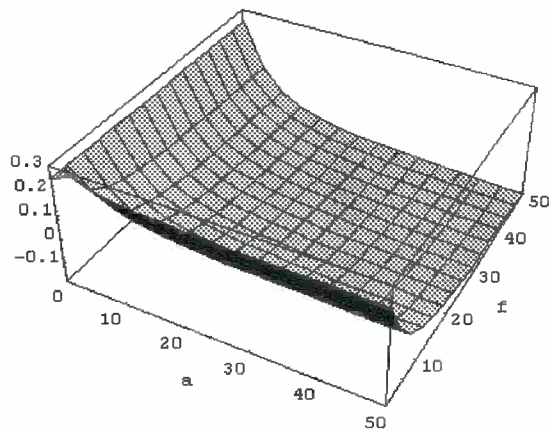

$\vartheta_1 = 1\text{-}b = 0.7, \vartheta_2 = h + q = 2, v = 1, v^* = 0.5,$
$g = 1,\ w = 1, z = 1,\ 0 < a < 50$ and $1 < f < 50$

values on the first and third rows of table 12, it is possible to obtain, $\Delta L^p_{\tilde{\rho}} - \Delta L^p_m = \frac{-a|v^* - v|(1+gw)}{F} < 0$ and $\Delta L^y_{\tilde{\rho}} - \Delta L^y_m = \frac{-ag|v^* - v|(g+2w+g^2w)}{F} < 0$.

The main conclusions of this section are the following. If the primary objective of the area-wide monetary authority is the maintenance of price stability, money targeting is preferable to spread pegging, except in the case of a high elasticity of loan demand with respect to income (w) associated with a high difference between the national credit channels ($v - v^*$). On the other hand, money targeting implies better consequences regarding output stabilisation only in the extreme situation of values of a, f, w and ($v - v^*$) low and ϑ_2 high. This means that, in normal cases, spread pegging has a more stabilising effect on output than money targeting. Moreover, when g becomes high (AS becomes horizontal), the competitive advantage of money targeting in terms of price stabilisation tends to zero, while the convenience of spread targeting in terms of output stabilisation increases. Finally, the "s" rule minimises the asymmetric effects between the two countries in terms of both prices and output.

9. What are the consequences for the optimal monetary rule?

The aim of this section is to study the properties of the monetary instrument x and the implications for the optimal monetary policy. Using implicit differentiation of the objective function (11), it is possible to analyse the response of x to all kinds of shocks (see table *13*).

An internal shock on the credit market reduces the value of x. Only if the difference between the "credit channels" becomes higher than a critical value ($v - v^* > \frac{2\vartheta_2[f(1+a)+g(f+a\vartheta_1)]}{a(1+gw)}$) are the derivatives $\frac{\partial x}{\partial \sigma^2_{uls}}$ and $\frac{\partial x}{\partial \sigma^2_{uld}}$ positive. In the case of an external shock on the credit market, x moves towards money targeting ($\frac{\partial x}{\partial \sigma^2_{uls*}} = \frac{\partial x}{\partial \sigma^2_{uld*}} < 0$). On the other hand, as expected, if the economies are hit by disturbances in money and aggregate demand, there is a call for spread pegging.

In the case of supply shocks, the signs of the derivatives depend on loan demand elasticity with respect to income (w) and the difference between the two "credit channels" ($v - v^*$). If the economies are hit by an internal supply shock, a sufficient

Table 13 The properties of the monetary policy x

$$\text{sign}\frac{\partial x}{\partial \sigma^2_{uls}} = \text{sign}\frac{\partial x}{\partial \sigma^2_{uld}} = -\text{sign}[\frac{(cf+2av)}{\Delta}\frac{2f\{2\vartheta_2[f(1+a)+g(f+a\vartheta_1)+ +a(v^*-v)(1+gw)]\}}{\Delta^2}]$$

$$\text{sign}\frac{\partial x}{\partial \sigma^2_{uls*}} = \text{sign}\frac{\partial x}{\partial \sigma^2_{uld*}} = -\text{sign}[\frac{(cf+2av^*)}{\Delta}\frac{2f\{2\vartheta_2[f(1+a)+g(f+a\vartheta_1)+ +a(v-v^*)(1+gw)]\}}{\Delta^2}] < 0$$

$$\text{sign}\frac{\partial x}{\partial \sigma^2_{umd}} = \text{sign}\frac{\partial x}{\partial \sigma^2_{umd*}} = -\text{sign}[\frac{-2f\vartheta_2}{\Delta}\frac{4f^2\vartheta_2(1+gw)}{\Delta^2}] > 0$$

$$\text{sign}\frac{\partial x}{\partial \sigma^2_{uyd}} = \text{sign}\frac{\partial x}{\partial \sigma^2_{uyd*}} = -\text{sign}[-\frac{2a\vartheta_2}{\Delta}\frac{4af\vartheta_2(1+gw)}{\Delta^2}] > 0$$

$$\text{sign}\frac{\partial x}{\partial \sigma^2_{uys}} = -\text{sign}[\frac{-[2\vartheta_2(f+a\vartheta_1)+w(cf+2av)]}{\Delta}\frac{2f[2f\vartheta_2(1-w)+2a\vartheta_2(\vartheta_1-fw)+aw(v-v^*)(1+gw)]}{\Delta^2}]$$

$$\text{sign}\frac{\partial x}{\partial \sigma^2_{uys*}} = -\text{sign}[\frac{-[2\vartheta_2(f+a\vartheta_1)+w(cf+2av^*)]}{\Delta}\frac{2f[2f\vartheta_2(1-w)+2a\vartheta_2(\vartheta_1-fw)+aw(v^*-v)(1+gw)]}{\Delta^2}]$$

$$\text{sign}\frac{\partial x}{\partial \sigma^2_{up}} = -\text{sign}[\frac{(1-\alpha)[cf(1+gw)+2f\vartheta_2(1+g)+ +2a\vartheta_2(f+g\vartheta_1)]+2a(v^*-av)(1+gw)}{\Delta}\frac{2a(1+\alpha)f(v-v^*)(1+gw)^2}{\Delta^2}]$$

where:

$$\Delta = [cf+a(v+v^*)](1+gw)+2\vartheta_2[f(1+a)+g(f+a\vartheta_1)] > 0$$
$$0 < \vartheta_1 = 1-b < 1 \quad \text{and} \quad \vartheta_2 = h+q > 0$$

condition for $\frac{\partial x}{\partial \sigma^2_{uys}}$ to be positive is $w < \max(1, \frac{\vartheta_1}{f})$, while it could become negative for higher values of w. In the case of an external supply shock, a sufficient condition for $\frac{\partial x}{\partial \sigma^2_{uys*}}$ to be negative is $w > \max(1, \frac{\vartheta_1}{f})$, while the value turns to be positive if the difference between the national "credit channels" is relatively low.[22]

---

[22] In particular, it must be $0 < v - v^* < \frac{2\vartheta_2[f(1-w)+a(\vartheta_1-f)]}{aw(1+gw)}$.

Table 14 The effects of the monetary policy x on output stabilisation

$$\text{sign}\frac{\partial x}{\partial \sigma^2_{uls}} = \text{sign}\frac{\partial x}{\partial \sigma^2_{uld}} = -\text{sign}[\frac{g(cf+2av)}{\Delta}\frac{2fg\{2\vartheta_2[f(1+a)+g(f+a\vartheta_1)+ +a(v^*-v)(1+gw)]\}}{\Delta^2}]$$

$$\text{sign}\frac{\partial x}{\partial \sigma^2_{uls*}} = \text{sign}\frac{\partial x}{\partial \sigma^2_{uld*}} = -\text{sign}[\frac{g(cf+2av^*)}{\Delta}\frac{2fg\{2\vartheta_2[f(1+a)+g(f+a\vartheta_1)+ +a(v-v^*)(1+gw)]\}}{\Delta^2}] < 0$$

$$\text{sign}\frac{\partial x}{\partial \sigma^2_{umd}} = \text{sign}\frac{\partial x}{\partial \sigma^2_{umd*}} = -\text{sign}[\frac{-2fg\vartheta_2}{\Delta}\frac{4f^2g\vartheta_2(1+gw)}{\Delta^2}] > 0$$

$$\text{sign}\frac{\partial x}{\partial \sigma^2_{uyd}} = \text{sign}\frac{\partial x}{\partial \sigma^2_{uyd*}} = -\text{sign}[-\frac{2ag\vartheta_2}{\Delta}\frac{4afg\vartheta_2(1+gw)}{\Delta^2}] > 0$$

$$\text{sign}\frac{\partial x}{\partial \sigma^2_{uys}} = -\text{sign}[\frac{2(1+\alpha)fg[2f\vartheta_2(1-w)+2a\vartheta_2(\vartheta_1-fw)+aw(v-v^*)(1+gw)]\{-\alpha g[2f\vartheta_2(1+a\vartheta_1)+w(cf+2av)]+cf(2+gw)+2\vartheta_2[2f(1+a)+ +g(f+a\vartheta_1)]+2a[v+v^*(1+gw)]\}}{\Delta^3}]$$

$$\text{sign}\frac{\partial x}{\partial \sigma^2_{uys*}} = -\text{sign}[\frac{2(1+\alpha)fg[2f\vartheta_2(1-w)+2a\vartheta_2(\vartheta_1-fw)+aw(v^*-v)(1+gw)]\{\alpha[cf(2+gw)+2\vartheta_2[2f(1+a)+g(f+a\vartheta_1)]+2a[v+v^*(1+gw)]+ -g[2f\vartheta_2(1+a\vartheta_1)+w(cf+2av)]\}}{\Delta^3}]$$

$$\text{sign}\frac{\partial x}{\partial \sigma^2_{up}} = -\text{sign}[\frac{(1-\alpha)[cf(1+gw)+2f\vartheta_2(1+g)+ +2a\vartheta_2(f+g\vartheta_1)]+2ag(v^*-av)(1+gw)}{\Delta}\ \frac{2a(1+\alpha)fg(v-v^*)(1+gw)^2}{\Delta^2}]$$

where:

$$\Delta = [cf+a(v+v^*)](1+gw)+2\vartheta_2[f(1+a)+g(f+a\vartheta_1)] > 0$$

$$0 < \vartheta_1 = 1-b < 1 \quad \text{and} \quad \vartheta_2 = h+q > 0$$

Only in the case of a "price-wedge" shock, the monetary instrument x depends on the importance attached to the stabilisation of the second group of countries (α). If $\alpha \geq 1$ (which includes the symmetric case), the sign of $\frac{\partial x}{\partial \sigma_{up}^2}$ is positive, implying that x moves towards spread pegging. On the other hand, if the weight of the countries with a more effective "credit channel" becomes larger and $0 < \alpha < \frac{2\vartheta_2[f(1+a)+g(f+a\vartheta_1)]+(cf+2av^*)(1+gw)}{2\vartheta_2[f(1+a)+g(f+a\vartheta_1)]+(cf+2av)(1+gw)} < 1$, the value of $\frac{\partial x}{\partial \sigma_{up}^2}$ becomes positive and x tends to increase.

The consequences of the monetary rule x (designed to minimise price variation) for output stabilisation, can be analysed from the results reported in table *14*. In the cases of financial (credit and money markets) and aggregate demand shocks, x is also optimal in terms of output stabilisation. In the remaining cases the sign of the derivatives depends additionally on α, and x is optimal in terms of output stabilisation only with a "price-wedge" shock.

If the economies are hit by a wide range of stochastic disturbances (not only *IS* and *LM* shocks as in Poole (1970), but also by credit market, *AS* and "price-wedge" disturbances), the optimal money supply process should consider as feedback variables both the interest rate on bonds and the spread. In fact, while the former embodies information mainly on money market disequilibrium (*LM*), the latter indicates also the state of credit market and aggregate demand (*CC*). Using the following money supply process to solve the model:

$$(25) \qquad m' = (m_t + m_t^*)^s = m_t + m_t^* + ki_t - x\frac{\tilde{\rho}_t + \tilde{\rho}_t^*}{2},$$

it is possible to obtain a reduced form that has the same characteristics of those reported in tables *3* and *9* (the only difference is that each parameter is function of both k and x). Moreover, the study of the optimal monetary rule (obtained using partial differentiation with respect to k and x) confirms the conclusions reported in tables *5-6* and *13-14*. In this case the monetary instrument (k, x) consists in choosing a point in the two-dimensional space (see fig. 14).

Each shock moves the optimal combination (k, x) in a different direction, with an intensity that is a function of the absolute value of the parameters of the model. For example, in the situation of approximately homogeneous "credit channels" ($\nu - \nu^* \cong 0$)

and $\alpha \geq 1$ (which includes the symmetric case), the law of motion of the optimal monetary instrument is represented by fig. *15*.

Figure 14 The optimal monetary instrument (*k*, *x*) with two feedback variables

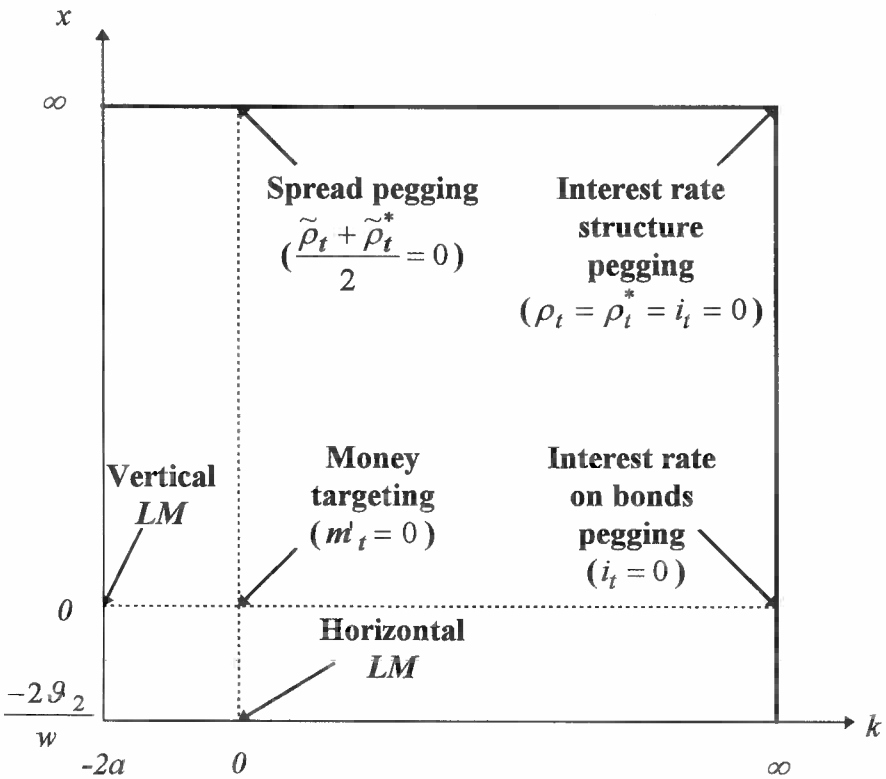

It is worth noting that if *(i)* the difference $v - v^*$ increases and *(ii)* the number of countries with a more effective "credit channel" reaches a critical value[23], the disturbances represented in bold characters modify their influence on the optimal monetary instrument. In case *(i)*, which represents an increase in national "credit channel" differences, home credit market disturbances moves the optimal monetary policy towards the north-west (this means that the three "pure" policies are in the following order of preference $s \succ m \succ i$, cf. tables *5* and *6*). On the other hand, if the economies are hit by supply shocks, interest rate and spread pegging are preferred to money targeting ($i, s \succ m$). As regards case *(ii)*, if the number of countries with a more effective "credit channel" increases, the optimal monetary policy in the case of a "price-wedge" shock moves to the south-east because $i \succ m \succ s$ (see fig. *16*).

---

[23] The expression for the critical value was given in Section 6.

Figure 15 The law of motion of the optimal monetary instrument (*k*, *x*) in the case of homogeneous credit channels ($v - v^* \cong 0$) and α≥1

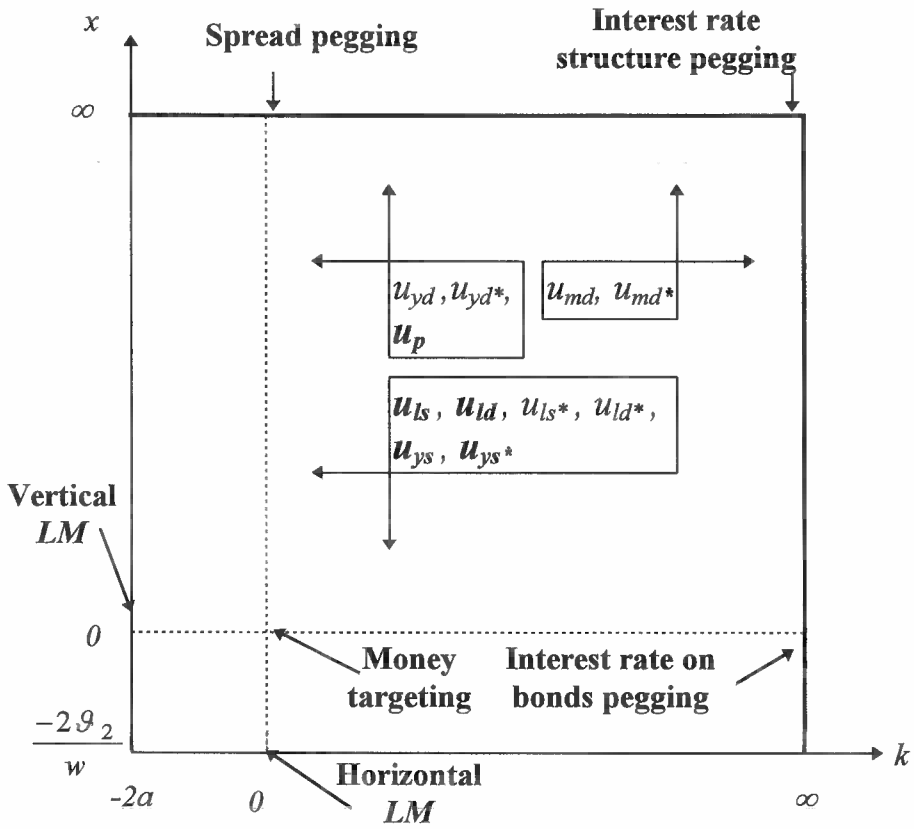

Figure 16 The law of motion of the optimal monetary instrument (*k*, *x*) in the case of asymmetric credit channels ($v - v^* > 0$) and α<c.v.<1

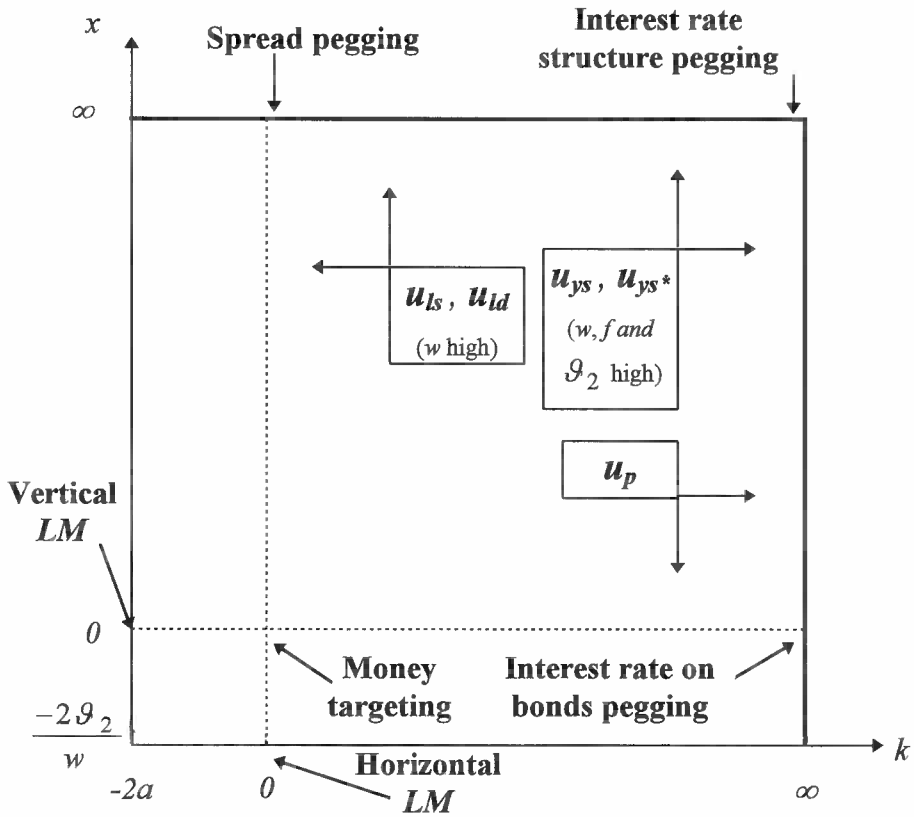

The optimal monetary rule (in terms of price stabilisation) has asymmetric consequences for real output only in the cases of aggregate supply and "price-wedge" shocks. As already pointed out, these asymmetries depend not only on the absolute value of specific parameters of the model, but also on α (see the first part of this section and section 6) and could represent a weak point of the proposed optimal monetary process. In fact, the latter, on the one hand, improves the performance of the classic Poole rule, but on the other hand, it seems to embody limited information with respect to supply-side shocks.

10. Conclusions and open questions

This paper has analysed the optimal monetary policy in the case of a monetary union composed of countries with heterogeneous "credit channels". In order to better insulate the economies from the asymmetric effects produced by differences in national financial systems, the classic money supply process proposed by Poole (1970) has been modified to consider the spread between the interest rates on loans and bonds as an additional feedback variable. Using a two-country rational expectations model, this study has compared the performance of the "pure" policies (money targeting, interest rate on bonds and spread pegging) and has highlighted the properties of the optimal monetary instrument. The main conclusions can be summarised as follows.

(i) In the case of a monetary union, if the money supply rule is incorporated into agents' (rational) expectations, the only effect of monetary policy is on prices, while real incomes are a function only of the disturbances. The distribution of money between the two countries produces an asymmetric effect and price levels are lower if the country with a less effective "credit channel" receives more money. Given the complete financial integration between the economies, financial and aggregate demand shocks influence prices and income in additive form and, therefore, the monetary union tends to reduce the effects of such disturbances only if they are negatively correlated. As regards their intensity, given the assumptions of the model, only shocks in the credit market affect the endogenous variables in a different way (heterogeneous "credit channels"), while money and aggregate demand shocks (wherever they occur) influence prices and income with the same intensity (homogeneous "money channels" and *PPP* condition). On the other hand, supply shocks and "price-wedge" disturbances have an asymmetric effect on national fundamentals (opposite in sign in the case of real output) and only when they are

negligible does the stabilisation objective of each of the countries coincide with that of the monetary-area as a whole.

(ii) Comparing the two "pure" policies nested in Poole's money supply process, money targeting is generally superior. If the primary objective of the area-wide monetary authority is the maintenance of price stability, a money stock supply rule is preferable to interest rate pegging, except in the special case of a money demand shock associated with *(i)* a high sensitivity of loan demand and supply with respect to the spread and *(ii)* a high effectiveness of the "money channel". In the latter case the "*m*" rule also causes a higher asymmetry between the price levels of the countries. The consequence regarding output stabilisation is unique: the "*m*" rule minimises always the variance of the real output at the area-level and represents a Pareto optimum.

(iii) Using the spread as a feedback variable in the money supply process implies, on the one hand, the absence of asymmetric effects of national credit market imperfections and, on the other, an insulation from money demand and aggregate demand disturbances. The comparison between spread pegging and money targeting gives a less general conclusion than that of (ii). Considering price stabilisation as the primary objective, money targeting is preferable to spread pegging, except in the case of a high elasticity of loan demand with respect to income (w), associated with a large difference between the national credit channels ($v - v^*$). On the other hand, money targeting gives better results regarding output stabilisation only in the extreme situation of contemporaneous low values of the elasticities (except those of loan supply and demand with respect to the spread) and homogeneous "credit channels". This means that, generally, spread pegging has a more stabilising effect on output than money targeting. Moreover, when the aggregate supply becomes more reactive to price changes (in the limit, horizontal *AS*), the competitive advantage of money targeting in terms of price stabilisation tends to zero, while the desirability of spread pegging in terms of output stabilisation increases. Finally, spread pegging minimises the asymmetric effects between the two countries both in terms of prices and output.

(iv) The optimal monetary rule has to consider as feedback variables both the interest rate on bonds and the average spread. In fact, while the former embodies information mainly about money market disequilibrium, the latter indicates in addition the state of the credit market and aggregate demand. Nevertheless, in both cases, the signalling power with respect to supply-side shocks seems to be more limited. If the objective function is

the minimisation of the variance of prices at the area level, the weight attached to the two groups of countries is relevant only in the case of "price-wedge" shocks (an increase of the number of countries with a more effective "credit channel" calls for interest rate pegging). On the other hand, each kind of shock changes the optimal rule in a specific direction with an intensity that is a function of the parameters of the model. Only if the difference between the "credit channels" reaches a critical value, the law of motion of the optimal rule could change direction. In this case, credit market shocks in the home country (which has a more effective credit channel) call for spread pegging, while supply shocks (wherever they occur) generate a preference towards a pegging of the whole interest rate structure.

(v) The country with a more effective "credit channel" performs better in terms of both prices and output stabilisation. This asymmetry tends to diminish if the monetary rule moves towards spread and interest rate on bond pegging.

Further research could be directed towards tackling the following three issues. First, the general analytical framework of the model could be used to analyse the consequences for the monetary transmission process of different structural and institutional differences between countries (for example, heterogeneous "money channels" or differences in the elasticities of some variables). Second, the results of the optimal monetary rule proposed in this study could be improved using price levels (or real outputs) as feedback variables to better insulate the economies from supply side shocks. Thirdly, an analysis of the monetary instrument problem should also take into account (autonomous) national fiscal policies. In this case, in fact, the optimal policy rule depends also on fiscal policy coordination at the area-level and should include as feedback variable also an indicator of their degree of asymmetry.

References

Angeloni I., Buttiglione L., Ferri G. and Gaiotti E. (1995), *The Credit Channel of Monetary Policy across Heterogeneous Banks: The Case of Italy*, Banca d'Italia, Temi di discussione, n. 256.

Committee for the Study of Economic and Monetary Union (the Delors Committee) (1989), *Report on Economic Monetary Union in the European Community*, Luxemburg, Office for Official Publications of European Communities

Bagliano A. and Favero C. (1995), *The Credit Channel of Monetary Transmission. The Case of Italy*,"Universita' Cattolica del Sacro Cuore", march.

Barran F., Coudert V. and Mojon B. (1995), *Transmission de la politique monetaire et credit bancaire: Une application a trois pays de l'OCDE*, "Revue Economique", Vol. 46, pp.393-413.

Bernanke B. and Blinder A.S. (1988), *Credit, Money and Aggregate Demand*, "American Economic Review", Vol. 78, 435-9.

Bellando R. and Pollin J.P. (1996), *Le canal du credit en France depuis la dereglementation financiere*, "Revue Economique", Vol. 47, pp.731-43.

Buttiglione L. and Ferri G. (1994), *Monetay Policy Transmission via Lending Rates in Italy: Any Lessons from Recent Experience?*, Banca d'Italia, Temi di discussione, n.224.

Dale S. and Haldane A. (1993*a*), *Interest Rate Control in a Model of Monetary Policy*, Bank of England Working Paper Series, 17.

Dale S. and Haldane A. (1993*b*), *Bank Behaviour and the Monetary Transnission Mechanism* , Bank of England Quarterly Bullettin, n. 33, November.

Dale S. and Haldane A. (1995), *Interest Rate and the Channel of Monetary Trasmission: some Sectoral Estimates*, European Economic Review, 39, 1611-26.

De Grauwe P.(1994), *The Economics of Monetary Integration*, Oxford University Press, Second Edition.

Gros D. and Thygesen N. (1992), *European Monetary Integration*, Longman, London.

Kashyap A.K., Stein J.C. and Wilcox D.W. (1992), *Monetary Policy and Bank Lending*, NBER, Working Paper Series, n. 4015.

Layard R., Nickell S. and Jackman R. (1991), *Unemployment. Macroeconomic Performance and the Labour Market*, Oxford University Press, New York.

Minsky H.P. and Ferri P. (1984), *Prices, Employment and Profits*, "Journal of Postkeynesian Economics", n. 4, pp.489-99.

Modigliani F. and Papademos L. (1990), "The Supply of Money", in B.M. Friedman and H. Hahn, *Handbook in Monetary Economics*, Amsterdam, North Holland, pp. 459-87.

Monticelli C. (1993), *Monetary Coordination under an Exchange Rate Agreement and the Optimal Monetary Instrument*, Banca d'Italia, Temi di discussione, n.214.

Poole W. (1970), *Optimal Choice of Monetary Instruments in a Single Stochastic Macro Model*, "Quarterly Journal of Economics", Vol. 84, pp. 197-216.

Rajan R. (1992), *Insiders and Outsiders: the Choice between Relationships and Arm's Length Debt*, "Journal of Finance", vol. 47, pp.1367-400.

Rogoff K. (1985), *The Optimal Degree of Commitment to an Intermediate Monetary Target*, "Quarterly Journal of Economics", vol. 100, pp. 1169-90.

Sharpe S.(1990), *Asymmetric Information, Bank Lending and Implicit Contract: a Stylized Model of Customer Relationships*, "Journal of Finance", vol. 45, pp.1069-87.

Turnovsky S. J. and d'Orey V.(1989), *The Choice of Monetary Instrument in Two Interdependent Economies under Uncertainty*, "Journal of Monetary Economics", Vol. 23, pp. 121-33.