Auctioning Payment Entitlements

Kurt Nielsen

Food and Resource Economics Institute,
The Royal Veterinary and Agricultural University,
Rolighedsvej 25C, DK-1958 Frederiksberg C
kun@kvl.dk

Paper prepared for presentation at the 11th Congress of the EAAE
(European Association of Agricultural Economists),
'The Future of Rural Europe in the Global Agri-Food System',
Copenhagen, Denmark, August 24-27, 2005

Auctioning Payment Entitlements

Kurt Nielsen*

August 2005

Abstract

Payment entitlements is a new commodity that arises from the new European common agricultural policy. The agricultural subsidies are decoupled from the actual production and replaced by the so-called payment entitlements. A payment entitlement has a farm specific value and may be freely traded. This paper discusses the complexity of this new market and suggests an auction that simplifies the complexity. The suggested auction allows a buyer to simultaneously bid on all payment entitlements. The prices are found by a tatonnement that monotonically approximates the equilibrium prices for the different types of payment entitlements for sale. The auction enhances the competition and efficiency of the market, which is essential for the individual members of the European Union in order for them to receive their entitled subsidies.

Keywords: Auction, multiple goods, bidding agents, tatonnement, agricultural subsidies.
JEL Classification: D44, Q13.

1 Introduction

For various reasons agriculture has been heavily subsidized in many countries around the world for quite some time (especially in the past 3-4 decades). Typically, this support has been coupled directly to the production of agricultural products. In the European Union (EU) agricultural subsidies have traditionally been a direct price support (as elsewhere). The consequences have roughly been two-fold: Overproduction and a distorted world market price. The overproduction has mainly been solved by production quotas, while the distorted world market price is of continuous concern not least to the World Trade Organization (WTO). Agriculture has been part of the WTO negotiations since the Uruguay round in 1986-94. As a result of the global concern about distortions of trade, the WTO has worked for a global decoupling of agricultural subsidies. Decoupled subsidies is a system of support that does not affect the price on agricultural products. Within the EU, the USA and many other places there have been various reforms aiming at a decoupling of agricultural support. See Ritson and Harvey (1997) and Picinini and Loseby (2001) for an overview of these reforms. The latest reform (the 2003-reform) in the EU is a big step towards a complete decoupled agricultural support. This reform contains a lot of special issues and transition periods concerning different agricultural products. However, one general element is the decoupling of direct price support, which is the topic of this paper. See Jensen and Frandsen (2003) for more details on the 2003-reform.

The price support, set a-side support etc. are transformed into farm specific "Payment Entitlements" (PE). A PE is the total amount of direct payment divided with the number of hectares (ha) on the individual farm. The total amount of direct payments is determined by a reference period (2000 -

*Food and Resource Economics Institute, The Royal Veterinary and Agricultural University, Rolighedsvej 25C DK-1958 Frederiksberg C, Phone: +45 45282316, E-mail: kun@kvl.dk

2002). Agricultural land is required to utilize a PE - one ha to one PE. The owner of a PE receives its nominal value each year. The 2003-reform states a maximum nominal value of 5000 Euros and a yearly depreciation starting with 3 % in 2005, 4 % in 2006 and 5 % in 2007 and onwards. Beside these yearly adjustments, the existence of the PEs is for an undefined period. The PEs may be traded freely with or without land. Some attempts have been made to estimate the outcome of the 2003-reform, see e.g. Jensen and Frandsen (2003). These models rely on ideal assumptions about how the market works, which may not hold in practice[1]. This paper discusses the complexity of the market for PEs and suggests an auction design that ensures a competitive market by easing the searching and matching of the participants.

Since most farms differ in their production portfolio and number of ha, the nominal value of the individual farm's PEs will differ as well. Clearly, a PE with a high nominal value is worth more than one with a low value, and they should therefore be treated as separate commodities. On a market for PEs, the important criteria is the difference between its price and its value to the individual farmer, not the price or the nominal value itself. Upon knowing the price on each of the PEs for sale, the buyer can relatively easy select his most preferred portfolio of PEs. For the market to be efficient, the PEs should end up in the hands of those that value them the most. For this to be true, the prices should be endogenously determined by the individual demand and supply for the different PEs, and demand and supply for the individual PEs should be determined by the prices. Even with a few PEs for sale, the transaction cost involved in the searching and matching seems to be considerable. The turnover of farms and land provides an indication of the size of the market. Taking Denmark as an example, for the past 3 years, around 5.900 farms and 110.000 ha have been traded per year and the total area has decreased with around 9.000 ha/year (De Danske Landboforeninger 2004). These numbers indicate that a large number of different PEs will be for sale at the same point i time. Also, as the area decreases, placing the most valuable PEs on the existing ha seems to be a considerable matching problem.

The main contribution to this paper is an auction design that relies on the principles of the so-called Walrasian Tatonnement. The auction is a closed auction where the participants submit the required information once and for all. A central planner is receiving information about each participant's reservation value of all possible PEs, his portfolio of PEs and number of ha. Based on this information the auction algorithm approximates the equilibrium by a systematic evaluation of possible outcomes. Given a set of possible market clearing prices, the algorithm selects each participants most optimal demand and supply and excess demand is determined for each type of PE. This information is used to find a new set of possible market clearing prices. Since the PEs are (most likely) substitutes, a unique equilibrium may be found by a Walrasian Tatonnement.

If the participants are price-takers the optimal bidding strategy is to submit the reservation values of all possible PEs (the true value). The auction algorithm allows the participants to trade all types of PEs simultaneously. Therefore, the markets for the different PEs can be seen as a single market in terms of efficiency and competition. The considerable size of the entire market for PEs makes the price-taking assumption likely and facilitates an efficient allocation of the PEs.

The outline of the paper is as follows. Section 2 provides theoretical background and present related work. Section 3 describes the market for payment entitlements. The auction design is presented in Section 4. Section 5 discusses the suggested auction, and Section 6 concludes.

[1]The results in Jensen and Frandsen (2003) are based on a general equilibrium model.

2 Some Theoretical Background on Auction Design

The application of auctions has a very long history but the theory of auctions is rather new and has developed along with the discipline of information economics. Klemperer (1999) provides a recent survey. An auction is basically a set of trading rules, and auction design aims at finding rules that ensure a desired outcome. An auction may improve the allocation of goods and services, e.g. by introducing a price setting mechanism that leads to more profitable trading by concentrating the market, or by making the market more transparent.

The central difficulty in auctions is that of private information. The bidders have private information, e.g. about their preferences or production costs. This information is needed - directly or indirectly - to determine an optimal allocation. On the other hand, economic agents cannot be trusted to reveal their private information unless they are given the right incentives to do so. In general, the agents may try to act strategically to influence the auction outcome in their own favor. By taking advantage of their information they might possibly get a better share of the reallocation gains. Though, the relative size of the individual bidder is crucial in utilizing private information.

2.1 The Double Auction

A relatively small fraction of the literature on auctions considers *multi-unit double auctions* where sellers and buyers reallocate multiple units of a product or a service. These auctions are sometimes called exchanges, I refer to them simply as double auctions or two-sided auctions. Some of the most important real world markets are double auctions, e.g. the typical stock exchanges (a continuous double auction).

To thoroughly study a double auction one needs an equilibrium model. Attempts have been made to introduce strategic behavior in the analytical studies of double auctions by invoking a series of further simplifications, see e.g. Wilson (1985) and Amir et al. (1990). However, in general, the problem of solving for equilibria in multi-unit auctions is analytically intractable, Gordy (1999, p. 450).

The literature on double auctions focuses in particular on three problems: 1) incentive compatibility (i.e. truth-telling must be an optimal bidding strategy), 2) ex post efficiency (i.e. the realization of all trades that improve social welfare) and 3) budget balancing (i.e. the aggregated value sold must equal the aggregated value bought). The two first problems follows from the so-called Myerson-Satterthwaite theorem, (Myerson and Satterthwaite 1983). It says that delays and failures are inevitable in private bargaining if the goods start out in the wrong hands. This follows from the central observation that in any two-persons bargaining game the seller have incentives to exaggerate its value and the buyer has incentives to pretend the value is low. There have been a few attempts to design truth-telling double auctions, see McAfee (1992) and Yoon (2001, 2003). Attempts to solve the first two problems is typically at the cost of the third problem of balancing the budget. Fortunately, the magnitude of the three problems diminish as the number of participants grows.

The markets considered in this paper are two-sided and consist of a large number of participants. We therefore assume that the buyers and sellers are non-strategic price-takers. They do not speculate in the price effect of demand and supply reductions. This assumption can be justified by several observations. First, this is a two-sided auction with elastic supply and demand. Any attempt to influence the price has a smaller effect in a two-sided auction than a one-sided auction with in-elastic supply. Second, we consider a market with a high number of participants. This makes every participant marginal. Third, several empirical studies and laboratory experiments have shown that the double

auctions are very stable, i.e. they are robust against strategic behavior. Test auctions with as few as 2-3 buyers and 2-3 sellers have generated almost efficient outcomes (Freidman (1984) and Friedman and Ostroy (1995)). Fourth, Satterthwaite and Williams (1989) show analytically that a double auction modelled as a Bayesian game converges rapidly towards ex post efficiency as the market grows.

Consider a large number of both sellers and buyers that meet in a double auction to exchange multiple items of a good. The sellers have well-defined supply schemes represented by a set of quantity-price bids $(s_1, p_1), (s_2, p_2), \ldots, (s_L, p_L)$. Here, s_l is the quantity seller i offers for sale at p_l. In this general representation, the supply scheme consists of L bids, one for each of the L possible bid prices. Likewise the buyers have well-defined demand schemes represented by a set of quantity-price bids $(d_1, p_1), (d_2, p_2), \ldots, (d_L, p_L)$. The demand and supply schemes are assumed to be monotone in the price. That is for any two prices p_h and p_l where $p_h \leq p_l$, we have $s_h \leq s_l$, i.e. a seller will supply at least the same when the price increases, and $d_h \geq d_l$, i.e. a buyer will demand at least the same when the price falls. All trade is executed at the same market clearing price. Bids to buy above and sell below the market clearing price is accepted, the remaining bids are rejected.

Now the aggregated demand/supply is found by summing up the demand/supply for each feasible market clearing price. Let I be the number of buyers, J the number of sellers, and i and j be the associated counters. For any market clearing price p_l, $l = 1, 2, \ldots, L$, the aggregated demand is given by $AD_l = \sum_{i=1}^{I} d_l^i$ and the aggregated supply is $AS_l = \sum_{j=1}^{J} s_l^j$. Also the excess demand is defined as $Z_l = AD_l - AS_l, \forall l = 1, 2, \ldots, L$. The discrete nature of the bids requires a clearing policy. We will typically say that an (approximate) equilibrium is where Z_l is closest to zero. With price-taking behavior the optimal bidding strategy is simply to submit the true demand and/or supply schemes, see e.g. Nautz (1995).

2.2 Multiple Double Auctions

In this paper, we look at an auction market with an unknown number of K different goods to be traded simultaneously. The possible interdependency between the different goods adds a new layer of complexity to the auction design. Among other places, these issues have been widely discussed in relation to selling licenses for using radio spectrums in the US. If a city is divided into two licenses, having both of the licenses is worth far more than the separate values of the two. On the other hand, the value of two spectrum licenses for two different cities may very well be independent. This problem of handling goods that can be complementary as well as substitutes on the same market, is not an easy task. The general approach, known as combinatorial auctions, allows the bidders to bid on any combination of items, which in itself may be an overwhelming task. Also, the problem of selecting the winner and setting the price is complex. In general, the problem of solving a combinatorial auction is NP-hard, meaning that the required number of elementary operations (addition, subtraction etc.) required for solving the problem is not a polynomial function. This basically means that (independently of the machinery) there is no guarantee that a solution will be found. Fortunately, most problems may be treated either by restricting the allowed combinations or by applying algorithms that find reasonable solutions. For a survey on combinatorial auctions see Vries and Vohra (2003). The use of combinatorial auctions is still very limited, for more see e.g. Pekec and Rothkopf (2003).

If the goods for sale are mutual substitutes, the search for equilibrium prices is greatly simplified. It is known that the optimal equilibrium may be found by a so-called Walrasian Tatonnement (Walras

1874). The PEs are mutual substitutes for bidder i, if raising the prices on all types of PEs but k does not reduce the demand for PE k:

$$p^*_{-k} \geq p_{-k}, p^*_k = p_k \qquad \Rightarrow \qquad D^i_k(p^*) \geq D^i_k(p) \tag{1}$$

With no type specific requirements on the individual PEs (e.g. by some degree of "coupled support"), this seems to be a reasonable assumption.

However, there is no guaranty that a Walrasian Tatonnement will find the equilibrium in reasonable time. The large number of possible equilibria illustrate the difficulties in finding the equilibrium. An equilibrium, is the K market clearing prices that clear all markets. Let L be the number of possible market clearing prices on each of the K markets. Now the total number of equilibrium candidates are $L_1 \cdot L_2 \cdot \ldots \cdot L_K = L^K$. In fact, computing the equilibrium is NP-hard in the number of markets. Therefore, the challenge is to find an algorithm that approximate the equilibrium with as few computations as possible. A few papers provide algorithms for discrete computations of Walrasian equilibria see e.g. Cheng and Wellman (1998); Cheng et al. (2003). This paper differs from the previous work by suggesting an algorithm that defines and updates a possibility set in which the equilibrium is to be found. Hereby the closeness of the equilibrium candidates is determined as the algorithm approach the equilibrium.

3 The Market For Payment Entitlements

Although the PEs may be traded together with land, an efficient market for PEs would be preferred. To see this note that if the price for a given PE is lower on the separate market for PEs, the buyers will chose to buy PEs separately. Likewise if the price is higher, the sellers will chose to sell PEs separately. Therefore, if the auction market constitute a Walrasian equilibrium, all PEs will be traded at the auction.

In terms of incentives, the assumption of price-taking behaviour makes it a mere question of ensuring individual best response to a given price vector. In order to do so the auction have to reflect the bidders' preferences. This section discusses the bidders' (buyers and sellers) best responses to a given equilibrium candidate, which is used in Section 4 to ensure ex post efficiency of the auction. Upon knowing the bidders' preferences, the auction mechanism basically bids in the best interest of the bidders, this is the idea of the so-called bidding agents.

For simplicity and without loss of generality, we will assume that the farmers have constant marginal utility of subsidies (money) and that the administrative costs of handling a PE is negligible. Given that the number of ha and the farmers' portfolio of PEs are common knowledge, the only private information required is the reservation values of all of the PEs for sale. Now, let R^i_k be bidder i's expected monetary value of PE k, then the expected surplus from buying a PE$_k$ is simply:

$$V^i_k = R^i_k - \hat{p}_k \tag{2}$$

where $\hat{p}_k$ is the market clearing price. The surplus from selling a given PE can be determined likewise. Based on the surpluses from buying and selling, the most optimal portfolio of PEs can be determined subject to an equilibrium candidate. Let $\mathbf{q}^i$ be a vector with the number of each of the K different PEs in i's portfolio, Q^i the total number of PEs and n^i the number of ha. With constant marginal utility of money the participants' most preferred portfolio is subject to the 4 constraints:

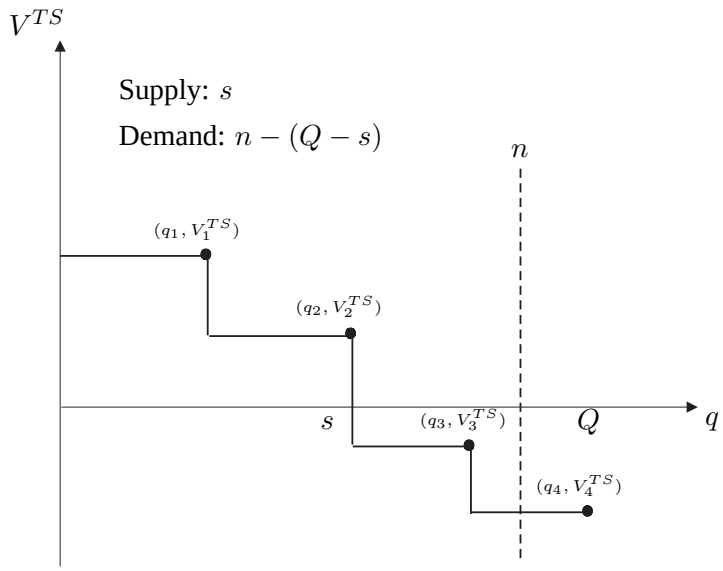

Figure 1. Supply and demand based on total surplus V^{TS}

Buying constraint: Buy only the most valuable PEs (given that it generates a positive surplus): $V_{k*}^B = R_{k*} - \hat{p}_{k*}$, where $k* = \arg\max_{k=1,2,\ldots,K}\{R_k - \hat{p}_k\}$

Selling constraint: Sell only PE$_k$ if the surplus from selling is positive: $V_k^S = \hat{p}_k - R_k > 0$

Replacement constraint: Replace only existing PEs if the total surplus from replacing is positive: $V_k^{TS} = V_{k*}^B + V_k^S > 0$

Quantity constraint: The reservation values of the PEs that are not utilized (because the number of PEs exceed the number of ha) is set equal to 0

With no negative surplus from trade *individual rationality* is ensured (participation is a weakly dominating strategy). Also, by selecting the most preferred buying, selling and replacements *incentive compatibility* is guaranteed (telling the truth is a weakly dominating strategy).

Now the actual demand and supply can be determined. By setting the reservation values of PEs that are not utilized equal to 0, the supply of PEs is given by the replacement constraint. Supply is a vector $\mathbf{s}^i$ with the number of PEs that provide a positive total surplus:

$$\mathbf{s}^i = \left\{ \begin{array}{lll} q_k^i & \text{if} & V_k^{i,TS} > 0 \\ 0 & \text{otherwise} & \end{array} \qquad \forall k = 1, 2, \ldots, K \right\} \tag{3}$$

Based on this optimal supply the demand is simply a matter of utilizing the number of ha (given that $V_{k*}^B > 0$). Based on the supply $\mathbf{s}^i$ the demand is given by the following number of PE$_{k*}$:

$$d_{k*}^i = n^i - \left(Q^i - \sum_{k=1}^{K} s_k^i \qquad \text{if} \qquad V_{k*}^{i,B} > 0 \right) \tag{4}$$

To picture this in a figure, let i's surplus scheme from trading (total surplus) be the order-statistics of $(q_1^i, V_1^{i,TS}), (q_2^i, V_2^{i,TS}), \ldots, (q_K^i, V_K^{i,TS})$ with respect to the total surplus $V_k^{i,TS}$. Figure 1 illustrates a situation where s PEs are supplied (two different types of PEs) and $n-(Q-s)$ of the most profitable PEs are demanded.

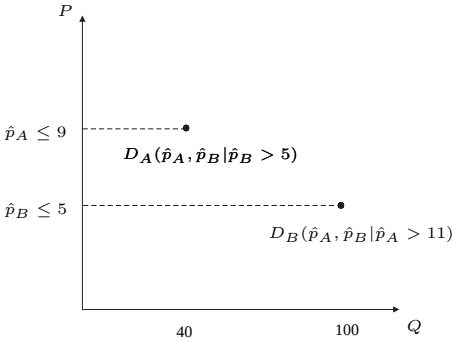

Figure 2. Conditional demand of PE$_A$ and PE$_B$

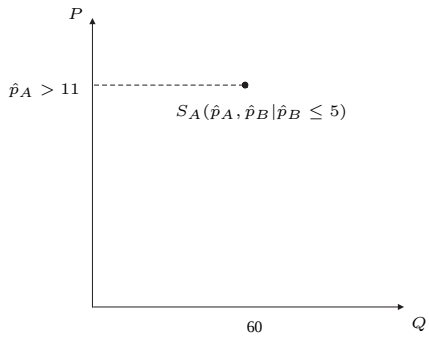

Figure 3. Conditional supply of PE$_A$

To give an numeric example, consider farmer i with 100 ha and 60 PEs of type A and a market that consists of only two types A and B. i's reservation values are: $R_A = 10, R_B = 6$ and the market clearing prices are: $\hat{p}_A = 8, \hat{p}_B = 5$, which leaves i with $V_A = 2$ and $V_B = 1$ from buying. Since, the total surplus of replacing the existing 60 PEs is 0 $(V_A - V_A)$, there will be no replacements. Also, since V_A is larger than V_B and positive the demand is simply the number of ha minus number of PEs in i's portfolio (minus possible replaced PEs): $100 - (60 - 0) = 40$ PE$_A$.

To picture the demand of e.g. type B in a traditional price-quantity diagram, we need to condition the demand on the price of type A and vise versa. Given $\hat{p}_B > 5$, i will demand 40 PE$_A$ at a maximum of $\hat{p}_A = 9$. Also, he would be willing to sell the existing 60 PE$_A$ at a price just above 11 conditioned on buying 100 PE$_B$ at a price no larger than 5. Figure 2 illustrates farmer i's conditional demand of both PE$_A$ and PE$_B$. Figure 3 illustrates the conditional sale of 60 PE$_A$.

Although the different PEs have to be treated in separate markets the linkage on the buyers' side makes the market function as one big market for PEs (assuming an efficient price formation). In terms of competition, the linkage makes the individual buyer and seller very marginal and therefore renders strategic behaviour unlikely. To see this, consider a large buyer that tries to bias the price downwards by withholding demand of a given PE. Now, since the buyers simultaneously bid on all PEs, a lower price on one market will make this PE more attractive to all of the other buyers and some buyers may switch demand towards this marked. Likewise, on the other side of the market, consider a large seller who tries to bias the price upwards by holding back supply of a given PE. Again, since the buyers simultaneously bid on all PEs, a higher price on one market will switch demand towards the other markets which counteract any strategic behaviour. Therefore, the price-taking behaviour that ensures the most optimal allocation seems most likely.

3.1 Bidding Agents

A bidding agent is a set of instructions that makes it possible for a computer to behave in the best interest of the individual participant. As we shall see, finding the equilibrium prices for the different PEs is an iterative process, that requires the different bidders to respond to different prices. The use of bidding agents makes this iterative process applicable in practice.

An open auction format known from the traditional stock exchange allows the bidders to respond directly to the prices. However, the searching and matching problem is considerable, and a good price formation requires active participation. Unlike professional traders in stock exchanges, most farmers probably neither have the time nor the training to ensure a reasonable price formation in such a market.

Also, on-line bidding with thousands of bidders may cause serious logistical problems. Therefore, the suggested auction is a closed auction with bidding agents.

With no scale effects on either demand or supply as in the scenario above, the only information required is each participant's reservation values R_k for all $k = \{1, 2, \ldots, K\}$ (assuming that the individual bidder's portfolio of PEs is public information).

To get the participants to participate and for the auction to be efficient we need to positively confirm two questions 1) Is $R_k^i \forall k = \{1, 2, \ldots, K\}$ too much information to ask for? and 2) do the bidding agents reflect the bidders' preferences?

Too much information?: When the bidders submit their bids, the actual number of different PEs for sale is unknown. Therefore to guarantee the most optimal trades, each bidder have to tell his reservation values of all possible K PEs, which may be measured in hundreds or thousands. To limit the quantity of information required, one solution could be to ask for type specific parameters to calibrate a valuation function. E.g. let the reservation value of a given PE with a nominal yearly value of r, be given as:

$$R(T, \epsilon, \delta, r) = \sum_{t=1}^{T} \delta^t E[\epsilon^t] r \tag{5}$$

where T is the expected duration of the PE, δ^t the discount factor, $E[\epsilon^t]$ the expected depreciation in year t. Hereby the required information is limited to 3 type specific parameters: T, ϵ and δ. However, for this to be a good idea we have to make sure that the functional form actually captures the individual reservation values. An alternative solution would be to ask for a limited number of bids and use linear interpolation in order to estimate the remaining reservation values. Data Envelopment Analysis have been used in a somehow similar setting to estimate costs in a regulatory setting, see e.g. Bogetoft (1997).

The right information?: Is the information about the bidders' reservation values of the different PEs enough to ensure ex post efficiency (given price-taking behavior)? So far we have assumed that there is no scale effect i.e. that a the marginal value of PE is constant independent of the number of PEs demanded or supplied. However, this might not hold in practice, a decreasing marginal value of PEs may come from a decreasing value of money or risk aversion[2]. To express possible scale effects demand schemes are needed. Individual demand schemes for each PE for sale is clearly to much information to ask for. One solution would be to introduce a general demand scheme based on the individual participant's surplus from trade[3].

4 The Auction Market

In this section we consider an auction market consisting of an unknown number of K PEs. The challenge is to find the K prices that clear all K double auctions simultaneously. As mentioned in Section 2, we know that the Walrasian tatonnement finds the optimal outcome when the PEs are mutual substitutes. Though with a large and unknown number of K markets the adjustment process maybe

[2]The common uncertainty about the whole existence of the agricultural subsidies may cause some buyers to pay less for high valued PEs, since the potential loss is greater.

[3]Also the incorporation of things like financial constraints and the national tax system (e.g. possible tax deduction or taxation of sale) are left for future research.

considerable. Therefore, we suggest a tatonnement that defines a possibility set W in which the equilibrium is to be found, and approximate the equilibrium by a systematic contraction of W.

The algorithm basically evaluates parallel equilibrium candidates. That is $\tilde{P} + \theta e$, where $\tilde{P} = (\tilde{p}_1, \tilde{p}_2, \ldots, \tilde{p}_K)$, $e = (1, 1, \ldots, 1) \in \mathbb{R}^K$ and θ is a multiple of the size of the price grids, $p_l - p_{l-1}$ (= 1 for simplicity). A somewhat similar approach is applied in some versions of the open so-called *simultaneous ascending clock auction* used for selling power capacity, see e.g. Cramton (2003).

To evaluate any equilibrium candidate, $\tilde{P} = (\tilde{p}_1, \tilde{p}_2, \ldots, \tilde{p}_K)$, each buyer's optimal response is determined and subsequently the excess demand and excess supply on each of the K markets are computed. The discrete nature of the bids requires a clearing policy[4]. We define the (approximate) equilibrium as the price vector $\hat{P} = (\hat{p}_1, \hat{p}_2, \ldots, \hat{p}_K)$ that results in the smallest aggregated excess demand and no excess supply on any market[5]:

$$\hat{P} = \arg\min_{\tilde{P}} \left\{ \sum_{k=1}^{K} Z_k(\tilde{P}) | Z_k(\tilde{P}) \geq 0 \forall k = 1, 2, \ldots, K \right\} \tag{6}$$

For any equilibrium candidate each participant's optimal demand and supply is found as described in Section 3. To sum up, let $\mathbf{q}^i$ be a vector with the number of each of the K different PEs in i's portfolio, Q^i the total number of PEs and n^i the number of ha. Now, each participant's optimal response to an equilibrium candidate $\tilde{P}$ is based on the buyer's and seller's surplus:

Buyer's surplus: $V^B_{k*} = R_{k*} - \hat{p}_{k*}$, where $k* = \arg\max_{k=1,2,\ldots,K}\{R_k - \hat{p}_k\}$

Seller's surplus: $V^S_k = \hat{p}_k - R_k$

Total surplus: $V^{TS} = V^B_{k*} + V^S_k$

Based on the total surplus the supply of the existing Q^i PEs is a vector $\mathbf{s}^i$ given as:

$$\mathbf{s}^i = \left\{ \begin{array}{lll} q^i_k & \text{if} & V^{i,TS}_k > 0 \quad \forall k = 1, 2, \ldots, K \\ 0 & \text{otherwise} & \end{array} \right\} \tag{7}$$

and demand as:

$$d^i_{k*} = n^i - \left(Q^i - \sum_{k=1}^{K} s^i_k \quad \text{if} \quad V^{i,B}_{k*} > 0 \right) \tag{8}$$

Since the PEs are mutual substitutes we can find a lower bound on the set of possible equilibrium candidates. This is summarized in proposition 1.

Proposition 1. *Let the minimum price vector $P^{\min}$ be $\tilde{P} + \theta^* e$ where θ is the largest integer thus there is no excess supply on any markets:*

$$\theta^* = \arg\max_{\theta} \{\tilde{P} + \theta e | Z_k(\tilde{P} + \theta e) \geq 0, \forall k = 1, 2, \ldots, K\} \tag{9}$$

[4]There are many ways in which two stepwise functions may overlap. The function may be over, equal or below for both price and quantity on both supply and demand. In general 3 positions on 4 different dimensions, which is $3^4 = 81$ different ways.

[5]In case of excess demand, we suggest that the lowest bid of the successful buyers will be randomly selected, such that all supply is met.

$P^{\min}$ constitutes a global minimum on all markets

$$P^{\min} \leq \hat{P} \tag{10}$$

Proof. Let the initial minimum price vector be $P_t^{\min}$. Now, consider a second equilibrium candidate $\tilde{P}_{t+1}$ and let all prices in $\tilde{P}_{t+1}$ equal the prices in $P_t^{\min}$, besides any price ω, which is decreased with the smallest possible step. ω may be any of the K prices.

In the following we show that if $P_{t+1}^{\min} \leq P_t^{\min}$, $P_{t+1}^{\min}$ is not closer to equilibrium. If $P_{t+1}^{\min} \leq P_t^{\min}$, then the prices on all markets but ω, are the same at time t and $t+1$. The price ω is one step below. Now, since a lower price on market ω has a weakly increasing effect on the aggregated demand and a weakly decreasing effect on the aggregated supply on market ω, the price effect is weakly increasing. On the other $K-1$ markets the price effect is weakly decreasing, caused by a weakly decreasing effect on demand (some demand moves to market ω) and a weakly increasing effect on supply (caused by more profitable replacements). Therefore, with a weakly decreasing effect on the other $K-1$ markets $P_{t+1}^{\min}$ can not be closer to equilibrium if $P_{t+1}^{\min} \leq P_t^{\min}$. □

The same reasoning may be used to find a global maximum $P^{\max}$. Now, the interval (box) between $P_t^{\min}$ and $P_t^{\max}$ constitutes a possibility set W_t in which the equilibrium must be found. Also, it follows from the existence of a global minimum price vector that the joint minimum price vector also constitutes a global minimum price vector. Consider the joint price vector $P_{t \bigcap t+1}^{\min}$ consisting of the following K prices $\max\{p_t^k, p_{t+1}^k\}, \forall k = 1, 2, \ldots, K$. Where p_t^k and p_{t+1}^k are the elements of the two different minimum price vectors $P_t^{\min}$ and $P_{t+1}^{\min}$. Hereby the intersection of the two possibility sets W_t and W_{t+1} ($W_t \bigcap W_{t+1}$) constitutes the possibility set in which the equilibrium is to be found. This is used in the tatonnement to keep track of the closeness to equilibrium.

For a given equilibrium candidate $\tilde{P}$ the possibility set W is bounded by the following K parallel price vectors: $P_k = \tilde{P} + \theta_k^* e$, where θ_k^* is defined as:

$$\theta_k^* = \arg\max_{\theta_k} \{\tilde{P} + \theta_k e | Z_k(\tilde{P} + \theta_k e) \geq 0\} \forall k = 1, 2, \ldots K \tag{11}$$

In terms of computations, each of the P_k price vectors may be found by a simple bi-sector search, which requires a minimum of computations. Appendix A provides an algorithm.

The missing part is the adjustment rule. That is, based on previous round, what should the next guess of a equilibrium candidate $\tilde{P}_{t+1}$ be? We suggest the adjustment to be based on $P_t^{\min}$ and $P_t^{\max}$ as well as a price vector P_t^{clear} consisting of the following K prices: $\tilde{p}_t^k + \theta_{k,t}^* e, \forall k = 1, 2, \ldots, K$, where $\tilde{p}_t^k$ is the price guess on market k in the previous round and $\theta_{k,t}^*$ the scalar found in equation 11. P_t^{clear} can be seen as some intermediate clearing prices. The suggested adjustment is based on $P_t^{\min}$ and P_t^{clear} as follows:

$$\tilde{p}_{t+1}^k = p_t^{k,\text{clear}} + \left\lfloor \frac{p_t^{k,\text{clear}} - p_t^{k,min}}{t} \right\rfloor \forall k = 1, 2, \ldots, K \tag{12}$$

t is initially equal to 1. If the new price vector does not result in a smaller W or the equilibrium (the equilibrium is where W_t and W_{t+1} result in the same price vector) then t is adjusted upwards in order to make the adjustment less.

To provide a good indication of the speed of convergence further studies remain to be done. A

simulation would clarify the usefulness of the auction and map the computation speed in terms of the contraction of W.

Clearly a good initial price vector may speed up the convergency. A good initial guess could be the price vector that makes the average participant indifferent between the K PEs. Let R_k^{avg} be the average reservation value of PE k then the initial price vector P^{ini} is the one that fulfills: $R_1^{\text{avg}} - p_1^{\text{ini}} = R_2^{\text{avg}} - p_2^{\text{ini}} = \cdots = R_K^{\text{avg}} - p_K^{\text{ini}}$. To estimate the average participant's valuations, one approach would be simply to take the average of all of the submitted valuations of the PEs[6]. Either way, making the average bidder indifferent seems to be a good first guess of the market clearing prices.

5 Discussion

As we have seen, the number of PEs is the most important parameter in terms of complexity. The way the value of the PEs are constructed counts for a large K. This leaves us with a high degree of complexity, which may cause the suggested tatonnement to fail in finding the equilibrium. In that case a different clearing rule must be applied. Fortunately, the tatonnement provides an approximation W in which the equilibrium is to be found. One solution is to apply the current minimum price vector and randomly select among the buyers in order to meet all supply. For a reasonable small W the possible distortions is of little importance. To see this note that the bids that are eliminated are the ones that generate the least surplus.

For a mechanism to work, the agents have to understand it and realise the optimal behaviour[7]. The idea of comparing the different PEs is probably by intuition easy to understand. However, possible use of valuation functions and general demand schemes as suggested in Section 3.1 may result in a unnecessarily complicated bidding process.

Finally, as mentioned earlier, an alternative approach is a traditional open exchange market. While such a market may have a positive effect of avoiding overoptimistic bids (the problem of the so-called *winner's curse*) the price formation requires too much activity from too many participants. An alternative middle way is the *bulletin market*, where buyers and sellers announce their bids and offers e.g. on a web site. Studies of this type of markets show that prices tend to be higher and efficiency lower compared to double auctions. One reason is that it tends to ease tacit collusion among the sellers. Ketcham et al. (1984) provides a thorough study of this problem and concludes that double auction empowers buyers in ways that a bulletin market does not.

6 Conclusion

The decoupling of the EU agricultural support introduces an all new market for the resulting securities; the payment entitlements. It requires a hectare to exploit a payment entitlement. Therefore, if the payment entitlements are not properly distributed the individual member countries will not be given the support they are entitled to.

In this paper we illustrate the complexity of this market and suggest an auction that ensures an optimal allocation of the payment entitlements. Based on information about the bidders' portfolio of PEs, number of ha and the reservation values of the different PEs, a bidding agent bids in the best

[6] In doing so it might be a good idea to exclude possible extreme bids e.g. excluding the 10 % highest and lowest bids and take the average of the remaining bids

[7] Understandability is just one of a long list of important criteria. Schotter (1998) provides an overview of general criteria for selecting a mechanism.

interest of each participant. An iterative algorithm ensures a monotonic price formation towards equilibrium.

Since the auction allows the buyers to systematically participate on all markets, the entire market of PEs can be considered as one in terms of competition. Therefore, the existence of thin markets for some types of PEs is of no importance for the overall competition and efficient distribution.

Bibliography

Amir, R., Sahi, S., Shubik, M. and Yao, S.: 1990, A strategic market game with complete markets, *Journal of economic theory* **51**, 126–143.

Bogetoft, P.: 1997, DEA-based yardstick competition: The optimality of best practice regulation, *Annals of Operations Research* **73**, 277–298.

Cheng, J. Q. and Wellman, M. P.: 1998, The walras algorithm: A convergent distributed implementation of general equilibrium outcomes, *Computational Economics* **12**, 1–24.

Cheng, S.-F., Leung, E., Lochner, K. M., OMalley, K., Reeves, D. M., Schvartzman, L. J. and Wellman, M. P.: 2003, Walverine: A walrasian trading agent. University of Michigan, Artificial Intelligence Laboratory.

Cramton, P.: 2003, Electricity market design: The good, the bad and the ugly, Proceedings of the Hawaii Internatinal Conference on System Sciences.

De Danske Landboforeninger: 2004, Landøkonomisk oversigt 2004, *Yearly statistical report*.

Freidman, D.: 1984, On the efficincy of experimental double auctions markets, *American Economic Review* **74**(1), 60–72.

Friedman, D. and Ostroy, J.: 1995, Competitivity in auction markets: An experimantal and theoretical investigation, *Economic Review* **105**, 22–53.

Gordy, M. B.: 1999, Hedging winner's curse with multiple bids: Evidence from the portuguese treasury bill auction, *The Review of Economics and Statistics* **81**(3), 448–465.

Jensen, H. G. and Frandsen, S.: 2003, Impact of the eastern european accession and the 2003-reform of the cap consequenses for individual member countries, Working paper, Danish Research Institute of Food Economics.

Ketcham, J., Smith, V. L. and Williams, A. W.: 1984, A comparison of posted-offer and double-auction pricing institutions, *Review of Economic Studies* **51**(4), 595–614. available at http://ideas.repec.org/a/bla/restud/v51y1984i4p595-614.html.

Klemperer, P.: 1999, Auction theory: A guide to the literature, *Journal of Economic Survey* **13**(3), 227–286.

McAfee, R.: 1992, A dominant strategy double auction, *Journal of Economic Theory* **56**(2), 434–450.

Myerson, R. B. and Satterthwaite, M. A.: 1983, Efficient mechanisms for bilateral trading, *Journal of Economic Theory* **1**(29), 265–281.

Nautz, D.: 1995, Optimal bidding in multi-unit auctions with many bidders, *Economics Letters* **48**, 301–306.

Pekec, A. and Rothkopf, M. H.: 2003, Combinatorial auction design, *Management Science* **49**(11), 1485–1503.

Picinini, A. and Loseby, M.: 2001, *Agricultural policies in Europe and the USA*, 1 edn, Palgrave.

Ritson, C. and Harvey, D.: 1997, *The Common Agricultural Policy*, 2 edn, CAB International.

Satterthwaite, M. A. and Williams, S. R.: 1989, The rate of convergence to efficiency in the buyer's bid double auction as the market becomes large, *Review of Economic Studies* **56**, 477–498.

Schotter, A.: 1998, *in Organization With Incomplete Information*, m. majumdar edn, Cambridge University Press, chapter A Practical Person's Guide to Mechanism Selection: Some Lessons From Experimental Economics.

Vries, S. D. and Vohra, R. V.: 2003, Combinatorial auctions: A survey, *INFORMS Journal on Computing* **15**(3), 284–309.

Wilson, R.: 1985, Incentive efficiency of double auctions, *Econometrica* **53**(5), 1101–1115.

Yoon, K.: 2001, The modified vickrey double auction, *Journal of Economic Theory* **101**, 572–584.

Yoon, K.: 2003, An efficient double auction, *Working paper*, Korea University.

Appendix

A Using a Bi-sector Search to Find W_t

Here we explicitly describe the algorithm used for finding the possibility set W_t in which the equilibrium is to be found given an equilibrium candidate $\tilde{P}_t$. Also the complexity in terms of computations is analyzed.

Given the initial equilibrium candidate, lower and upper bounds on the equilibrium price vector, $P^{\min}$ and $P^{\max}$, are found by applying the algorithm below K times. Consider an initial candidate $\tilde{P}_t$ and K initial minimum prices ($p_{k,t}^{min} = 0$) and three initial maximum prices ($p_{k,t}^{max} = \max\{p_1, p_2, \ldots, p_L\}$). For each $k = 1, 2, \ldots, K$ the following algorithm is applied:

Step 1: Each participant's supply and demand $(\mathbf{s}^j, \mathbf{d}^i)$ is determined.

Step 2: Excess demand is computed $Z_k(\tilde{P}_t) = \sum_{i=1}^{I} d_k^i(\tilde{P}_t) - \sum_{j=1}^{J} s_k^j(\tilde{P}_t)$.

Step 3: The sign of $Z_k(\tilde{P}_t)$ is determined.

Step 4: If $Z_k(\tilde{P}_t) < 0$, the $p_{k,t+1}^{max} = \tilde{p}_{k,t}$ and $\tilde{P}_{t+1} = \tilde{P}_t - e\left\lfloor \frac{\tilde{p}_t - p_{k,t}^{\min}}{2} \right\rfloor$, otherwise $p_{k,t+1}^{min} = \tilde{p}_t^k$ and $\tilde{P}_{t+1} = \tilde{P}_t + e\left\lfloor \frac{p_{k,t}^{\max} - \tilde{p}_t}{2} \right\rfloor$.

Step 5: If $\tilde{P}_t = \tilde{P}_{t+1}$ stop, otherwise return to Step 1

The result is K price vectors $P^1 + \theta^1 e, P^2 + \theta^2 e, \ldots, P^K + \theta^K e$. Taking coordinate wise minimum and maximum defines the possibility set (W) in which the equilibrium is to be found.

The number of computations in order to find a single price vector is: $\log_2 L(I + J + 1)$ additions and as many determinations of optimal demand/supply as well as $\log_2 L$ comparisons. The total number of computations is K times larger. The number of computations in the next round depend entirely on the size of the possibility set W from the previous round.