AgEcon SEARCH
RESEARCH IN AGRICULTURAL & APPLIED ECONOMICS

The World's Largest Open Access Agricultural & Applied Economics Digital Library

This document is discoverable and free to researchers across the globe due to the work of AgEcon Search.

Help ensure our sustainability.

Give to AgEcon Search

AgEcon Search
http://ageconsearch.umn.edu
aesearch@umn.edu

*Papers downloaded from **AgEcon Search** may be used for non-commercial purposes and personal study only. No other use, including posting to another Internet site, is permitted without permission from the copyright owner (not AgEcon Search), or as allowed under the provisions of Fair Use, U.S. Copyright Act, Title 17 U.S.C.*

September 1987

A.E. Res. 87-22

A Dynamic Analysis of the Food Security Act and the Harkin-Gephardt Bill: The Dairy Sector

by

Harry M. Kaiser, Deborah H. Streeter, and Donald J. Liu

Department of Agricultural Economics
Cornell University Agricultural Experiment Station
New York State College of Agriculture and Life Sciences
A Statutory College of the State University
Cornell University, Ithaca, New York 14853

It is the policy of Cornell University actively to support equality of educational and employment opportunity. No person shall be denied admission to any educational program or activity or be denied employment on the basis of any legally prohibited discrimination involving, but not limited to, such factors as race, color, creed, religion, national or ethnic origin, sex, age or handicap. The University is committed to the maintenance of affirmative action programs which will assure the continuation of such equality of opportunity.

Acknowledgements

Harry M. Kaiser and Deborah H. Streeter are Assistant Professors, and Donald J. Liu is a Research Associate in the Department of Agricultural Economics at Cornell University. Senior authorship is shared equally by the three authors.

There are several individuals who provided valuable assistance in this study. The useful comments and review of drafts of this paper by Jon Conrad, Maureen Kilkenny, Timothy Mount, Christine Ranney, and William Tomek are gratefully acknowledged. The authors also wish to acknowledge Holly Knickerbocker for her assistance in preparing this report. Remaining errors are the responsibility of the authors.

Funding for this project came from the Cornell University Agricultural Experiment Station.

Abstract

The adoption of mandatory supply controls would be a significant departure from past and present dairy policy. While farmers obviously would be affected by such a shift in policy, processors of fluid milk and manufactured dairy products, as well as consumers of dairy products, would also be affected. The purpose of this paper is to analyze the changes in equilibrium prices, quantities, producer and consumer welfare, and government costs that would occur if existing dairy policy were replaced with a mandatory supply control program. The analysis is based on an econometric model of the dairy industry and a dynamic simulation of the system under two alternate scenarios: (1) the pricing provisions set by the 1985 Food Security Act; and (2) the pricing and mandatory supply control provisions of the Harkin-Gephardt Bill. The econometric model is estimated using national annual data from 1949 to 1985. The simulation results are used to evaluate consumer and producer surpluses over a five-year period, 1986-1990. The results indicate that farmers, processors, and consumers face substantial changes in welfare depending upon which policy scenario is adopted. Farmers are considerably better off in terms of income and producer surplus under the HGB scenario. Processors and consumers, on the other hand, are substantially better off under the FSA scenario in terms of net income and consumer surplus.

Table of Contents

Page

Acknowledgements i

Abstract ii

Introduction 1

Dairy Policy Scenarios 2

The Econometric Model 5

Farm Raw-Milk Market 5

Retail Fluid-Milk Market 6

Retail Manufactured Product Market 6

Linkages Between Farm and Retail Markets 7

The Estimation 7

Estimation Results 8

Policy Simulation 13

The Simulation Procedure 15

Differences in Simulation Between the Two Policy Scenarios 17

Simulation Results 18

Summary and Policy Implications 22

References 23

Appendix 1: Results of Knutson, et. al., and FAPRI's Studies 26

Appendix 2: The Data and Sources 27

Appendix 3: Forecasted Values of Exogenous Variables 32

Appendix 4: Welfare Calculations 33

Appendix 5: Support Price Calculations for the HGB Scenario 36

A Dynamic Analysis of the Food Security Act and the Harkin-Gephardt Bill: The Dairy Sector

Harry M. Kaiser, Deborah H. Streeter, and Donald J. Liu

Introduction

Since 1980, the U.S. dairy industry has been plagued with a costly surplus problem. For example, between 1980 and 1986, national milk production outpaced aggregate commercial disappearance by an average of almost 12 billion pounds (milk equivalent) per year, which was equivalent to 8.7 percent of total production. The annual cost of removing the surplus under the dairy price support program averaged $1.94 billion for the six-year period. The increasing cost of the existing program has led to considerable political pressure to change or modify current policy. Recently, several farm organizations (e.g., the Family Farm Alliance), and politicians (e.g, Senator Harkin and Representative Gephardt) have argued that a mandatory supply control program would be the best policy for simultaneously reducing milk surpluses and maintaining dairy farmers' prices and incomes.

The adoption of supply controls would be a significant departure from past and present dairy policy. While farmers clearly would be affected by such a shift in policy, processors of fluid milk and manufactured dairy products as well as consumers of dairy products would also be affected. It is therefore important to determine the implications of supply control for all three groups.

The purpose of this paper is to analyze the changes in equilibrium prices, quantities, producer and consumer welfare, and government costs that would occur if existing dairy policy were replaced with a mandatory supply control program. The analysis is based on an econometric model of the dairy industry and a dynamic simulation of the system. The econometric model is estimated using national annual data from 1949 to 1985. The simulation results are used to evaluate consumer and producer surpluses over a five-year period (1986-1990) under two alternative policy scenarios: (1) the pricing provisions set by the 1985 Food Security Act; and (2) the pricing and supply control provisions of the Harkin-Gephardt "Family Farm Bill."

The paper is organized into three sections. In the first section, the two policy scenarios are described. The structure of the econometric model and the estimated equations are presented in the second section. In the final section, the simulation is described and the empirical results are reported and analyzed.

Dairy Policy Scenarios

The first policy scenario is based on the pricing structure of current U.S. dairy policy, as defined by the Food Security Act (FSA) of 1985. The price farmers receive for their milk is influenced by the dairy price support program and the Federal milk marketing order program. Under the price support program, the government supports the price for manufacturing grade (Grade B) milk by supporting wholesale prices for cheese, butter, and nonfat dry milk. The USDA announces purchase prices for the supported products based on a formula that uses the support price for manufacturing grade milk and the "make allowance" to adjust for the average cost of manufacturing, net of raw milk. By offering to purchase unlimited quantities of the supported products at pre-announced purchase prices, the government indirectly maintains the market price for raw milk near the support price by increasing the farm level demand for raw milk.

While the price support program directly affects the market for Grade B milk, the Federal milk marketing order program regulates handlers of milk eligible for fluid consumption or Grade A milk through a system of classified pricing. Regulated handlers are required to pay minimum class prices according to how the milk is utilized. The milk receipts are then pooled and a "blend" price is calculated and paid to farmers. The blend price is an average of the price paid for fluid (Class I) purposes and the price paid for manufacturing (Class II or III) purposes[1], weighted by the corresponding fluid and non-fluid marketwide utilization rates.

The Class II price is equal to the Minnesota-Wisconsin price, a competitively determined average Grade B price paid by manufacturers in Minnesota and Wisconsin. Since the Minnesota-Wisconsin price is competitive, it is equal or close to the support price when government net removals are positive. The Class I price is equal to the Minnesota-Wisconsin price plus a fixed fluid allowance, called the Class I differential. The Class I differential is different for each marketing area, generally increasing with the distance of the area from Eau Claire, Wisconsin. While separate programs, the price support and Federal marketing order programs are related since the support price impacts the Minnesota-Wisconsin price, which in turn is the basis for class prices in marketing orders. For a more detailed discussion of Federal milk marketing orders, see Kaiser.

The FSA sets the policy parameters of the dairy price support and Federal milk marketing order programs for 1986 through 1990. One change from previous policies made by the 1985 FSA was the method for setting the dairy support price by implementing a "trigger" mechanism based on

---

1 Some Federal milk marketing orders use only one class to designate manufacturing utilization (Class II), while others use two manufacturing classifications (Classes II and III). Throughout this paper, the term Class II is used to designate all manufacturing utilization.

projected milk surpluses. Beginning on January 1, 1988 and extending to 1990, the Secretary of Agriculture will decrease (increase) the $11.10 support price by $0.50 if net removals for the year are projected to be above 5 (below 2.5) billion pounds. The FSA also authorized the 1986 Dairy Termination Program, a voluntary supply control program, designed to decrease milk surpluses through paid herd liquidations. Between April 1986 and August 1987, this program removed over 12 billion pounds of milk from the market, measured in terms of participants' 1985 milk marketings.

The second policy scenario is based on the supply control and pricing provisions of the the Harkin-Gephardt Bill (HGB). This bill, if enacted and approved by the majority of dairy farmers in a national referendum, would modify current policy by instating a mandatory supply control program and by raising support prices for milk and major crops. Both the dairy price support and Federal milk marketing order programs would be retained if this bill became law.

Instead of relying on government purchases to support milk prices, the HGB would establish a National Milk Marketing Base Program to limit total marketings to total projected use of milk. All dairy farmers would be issued marketing quotas, equal to their average annual marketings between 1981 and 1985, with the highest and lowest years deleted. The Secretary of Agriculture would estimate the ratio of consumption to production each year, and farmers would be issued annual marketing certificates equal to their quota multiplied by the national ratio of consumption to production.

In return for cutbacks in milk marketings, the price of all milk sold in conjunction with marketing certificates would be supported at a higher level than the current dairy price support. Beginning in 1988, the price support for 3.67% butterfat milk would be set at 70 percent of parity and would be increased by 1 percentage point each year until 1998, when it would reach 80 percent of parity. To illustrate how support prices would differ under the HGB, the 70 percent of parity support price in 1986 would have been 29 percent higher than the actual $11.60 support level. Milk sales exceeding the marketing certificate quantity would be subject to a price penalty equal to 75 percent of the price support.

Two recent studies have analyzed the impacts of the Harkin-Gephardt Bill and Food Security Act on the U.S. agricultural sector (Knutson, et. al.; Food and Agricultural Policy Research Institute--FAPRI). The two studies provide valuable empirical insights into the effects of supply controls on farmers' welfare (see Appendix 1 for summary of results). Yet, little is known about the consumer welfare implications of supply controls relative to existing policy. Measures of consumer and producer surplus would be useful to policy makers in evaluating the two policy scenarios in terms of their impacts on society in general.

This study differs from the two previous reports in two ways. First, the focus is on the dairy sector rather than all of agriculture, and so the study provides a detailed analysis of the impact of the

policy scenarios on the national dairy market. Secondly, the empirical model places equal emphasis on retail and farm markets. Consequently, the results of the simulation provide insight into the effects of alternative policies on consumers and processors as well as the farm sector.

The Econometric Model

The econometric model of the dairy sector used in this research consists of a farm market and a retail market. Raw milk is supplied by dairy farmers in the farm market. All post-farmgate marketing functions such as milk assembly, processing, distribution, and retailing are assumed to be performed at one market level, which will be called the retail market. Retailers of fluid products purchase raw milk from farmers and in turn process and sell it as fluid products directly to consumers. Likewise, retailers of non-fluid products buy raw milk from farmers and in turn process and sell it as manufactured products directly to consumers. It is assumed that the fluid and non-fluid retailers sell only in commercial markets and that excess supplies of raw milk beyond commercial demand are acquired by government through the price support program.

The model differs from LaFrance and de Gorter's formulation in which all post-farmgate functions are aggregated into a farm demand equation for raw milk. The choice of a two-sector approach was made to allow for analysis of policy impacts on consumers and processors. The following discussion describes the specifications of the model, including demand and supply functions for raw milk, fluid and manufactured products; government removals; and other linking relationships.

Farm Raw-Milk Market

By definition, the supply of raw milk (S^{rm}) is equal to the number of cows (CN) times production per cow (PPC). While S^{rm} could be estimated directly, estimating separate equations for CN and PPC provides additional information that otherwise could not be obtained. For example, estimating CN and PPC provides information on how producers adjust output to changes in price in addition to the magnitude of their output response.

The number of cows is a function of the expected all milk price (AMP^*)[2], expected feed costs (FC^*), expected slaughter cow price (SCP^*), and lagged cow numbers, included to capture the capacity constraint of the dairy sector. Production per cow is a function of the expected all milk price, expected feed costs, and technology (T).

At equilibrium, the supply of raw milk is equal to the retail processor demand for raw milk (D^{rm}), which is denoted by Q^{rm}. With the understanding that processor demand for raw milk is in part determined

---

2 The all milk price is the national average price received by dairy farmers, weighted by fluid and non-fluid utilization. The all milk price is the closest thing there is to a national blend price, since Federal milk marketing orders are regional and cannot be used to calculate a true national blend price.

by the supply and demand conditions of the retail fluid and manufacturing markets, the farm market can be represented by the following equations:

(1.1) $S^{rm} = CN * PPC,$

(1.2) $CN = CN(AMP^*, FC^*, SCP^*, CN_{lag}),$

(1.3) $PPC = PPC(AMP^*, FC^*, T),$

(1.4) $S^{rm} = D^{rm} = [Q^{rm}].$

Retail Fluid-Milk Market

Consumer demand for fluid milk (D^f) can be expressed as a function of the retail price of fluid milk (RFP), lagged demand, and other demand shifters (DS^f). Lagged demand is used to capture the consumption effect of habit formation. The vector DS^f includes variables such as the price of fluid product substitutes, consumer income, and a demographic profile of the consuming economy.

The retail processor supply of fluid milk (S^f) can be expressed as a function of the retail price of fluid milk, the Class I price (P1), lagged supply, and other supply shifters (SS^f). The effect of the capacity constraint on fluid supply is captured by including lagged supply, while other supply shifters include technology and costs of processing and retailing fluid milk. The Class I price serves as the input price for raw milk used for fluid purposes.

The fluid market demand, supply and equilibrium equations are:

(2.1) $D^f = D^f(RFP, D^f_{lag}, DS^f),$

(2.2) $S^f = S^f(RFP, P1, S^f_{lag}, SS^f),$

(2.3) $D^f = S^f = [Q^f].$

Retail Manufactured Product Market

Consumer demand for manufactured dairy product (D^m) is expressed as a function of the retail price of the product (RMP), lagged demand, and other demand shifters (DS^m). Lagged demand is used to reflect habit formation, while the vector DS^m includes the price of manufactured dairy product substitutes, income, and factors reflecting the demographic profile of consumers.

The retail processor supply of manufactured dairy product (S^m) can be expressed as a function of the retail price of the product, the Class II price (P2), lagged supply, and other supply shifters (SS^m). Lagged supply is included to account for capacity constraints, while supply shifters include costs of processing and retailing manufactured dairy product, and technology of the sector. In the manufacturing market, the Class II price is the input price for raw milk.

The manufactured market demand, supply, and equilibrium equations are:

(3.1) $D^m = D^m(RMP, D^m_{lag}, DS^m)$,

(3.2) $S^m = S^m(RMP, P2, S^m_{lag}, SS^m)$,

(3.3) $S^m = D^m = [Q^m]$.

Linkages Between Farm and Retail Markets

There are two important linkages in the model between the farm and retail markets. The first is the equilibrium condition that the quantity of raw milk should equal the sum of the quantities of fluid and manufactured products plus net government removals (CCC) when expressed on a milk equivalent basis, i.e.

(4) $Q^{rm} = Q^f + Q^m + CCC$.

The second linkage between markets is the all milk price formula. In (1), the supply of raw milk is expressed in part as a function of the expected all milk price. To fully link the system, an equation for the all milk price is needed. Based on the legislated classified pricing scheme, the all milk price is a function of P1, P2, Q^f, Q^m, and Q^{rm}:

(5) $AMP = P1 * (Q^f/Q^{rm}) + P2 * (Q^m + CCC)/Q^{rm}$.

The Estimation

Estimation of the system of equations defined above can be simplified by making the following two assumptions: 1) the expectations expressed in (1.2) and (1.3) are naive and therefore exogenous, and 2) the Grade B market price never exceeds the support level and therefore the government support price is binding.[3]

The two plausible assumptions facilitate solving the system in a block independent manner. Specifically, as a result of assuming naive expectations, it is possible to estimate the farm supply of milk (1.1 to 1.3) independently from the rest of the system. Furthermore, the results of the independent estimation determine the equilibrium quantity (Q^{rm}) of raw milk as expressed in (1.4).

Given the second assumption, it is reasonable to expect the Class II price to be closely correlated to the support price (SP). Accordingly, the legislated support price can be used to obtain a good

---

[3] In previous studies using annual data (e.g., Chavas and Klemme), a naive price expectations assumption for the all milk price has yielded reasonable results. Specifying another system to explain the behavior of feed costs and slaughter cow prices is clearly beyond the scope of this analysis. The second assumption is realistic because, during the study period (1949 to 1985), government net removals are positive in all but one year.

instrument for the actual Class II price and, hence, the actual Class I Price (LaFrance and de Gorter). Denote the Class I differential as d and the instruments for P1 and P2 as P1HAT and P2HAT, respectively:

(6.1) P2HAT = f(SP),

(6.2) P1HAT = P2HAT + d.

By substituting P1HAT into (2.2) for P1, the three endogenous variables (D^f,S^f,RFP) in the fluid milk market can be solved simultaneously using (2.1) to (2.3). Hence, the equilibrium quantity Q^f is determined. In a similar fashion, by substituting P2HAT into (3.2), the three endogenous variables (D^m,S^m,RMP), and hence the equilibrium quantity Q^m in the manufacturing market, can be solved simultaneously using (3.1) to (3.3). Finally, Q^{rm}, Q^f, and Q^m can be used in (4) and (5) to determine government removals and the equilibrium all milk price.

Estimation Results

The estimated equations are presented in Table 1, and variables are defined in Table 2. The numbers in parentheses are t-ratios, R^2 is the adjusted coefficient of determination, DW is the Durbin-Watson statistic for serial correlation, and u is used to denote the estimated white noise for each equation. The estimated coefficients of all explanatory variables have the expected signs, and all have reasonably large t-ratios. In every case, the estimated equation explains over 95 percent of the variation in the dependent variable. The data and source for each time series used in the estimation are reported in Appendix 2.

Class II Price Equation

The Class II price per hundredweight (P2) initially was regressed on the 3.67 percent butterfat support price per hundredweight (SP) using ordinary least squares to obtain the instrument P2HAT. However, the resulting DW indicated the existence of serial correlation. To correct for the first-order autocorrelation, Beach and Mackinnon's maximum likelihood procedure was used. In the table, the notation L denotes a lag operator with the property that $L\ X = X_{-1}$.

Raw Milk Supply

The cow numbers variable (CN), was regressed on the lagged ratio of the all milk price (AMP) to the dairy ration costs (FC); and the lagged slaughter cow price per cwt., deflated by the index of prices received by farmers (DSCP).[4] The price variables were lagged one year to reflect the assumption of naive expectations. A distributed-lag filter ($1 - w_1 L - w_2 L^2$) was applied to the price ratio variable where the coefficients w were estimated simultaneously with the rest of

4 For all indices used in this study, 1967 is the base year.

Table 1. Results of the Estimated Equations of the Dairy Sector.

Class II Milk Price (Equation 6.1)

$$P2 = \underset{(2.10)}{0.2673} + \underset{(51.90)}{0.9621}\ SP + \underset{(2.55)}{1/(1-0.4059\ L)}\ u \qquad R^2=0.995;\ DW=1.85$$

Cow Numbers (Equation 1.2)

$$\ln CN = \underset{(1.65)}{0.0287/(1 - 1.7264\ L + \underset{(-5.48)}{0.7281\ L^2})}\ \underset{(12.96)}{\ln (AMP/FC)_{-1}} - \underset{(-2.15)}{0.0378\ \ln DSCP_{-1}} + u \qquad R^2=0.997;\ DW=1.95$$

Production Per Cow (Equation 1.3)

$$\ln PPC = \underset{(237.01)}{8.5198} + \underset{(1.84)}{0.0871\ \ln (AMP/FC)_{-1}} + \underset{(17.09)}{0.0253\ T} + \underset{(12.34)}{1/(1 - 0.9106\ L)}\ u \qquad R^2=0.998;\ DW=1.74$$

Fluid Demand (Equation 2.1)

$$\ln D^f = \underset{(-1.84)}{-\ 0.0407\ \ln (RFP/BPI)} + \underset{(3.23)}{0.1712\ \ln DINCOME} + \underset{(3.04)}{1.3779\ A_{U19}}$$
$$\underset{(-2.78)}{-\ 3.4980\ A_{45-64}} + \underset{(2.85)}{0.5531\ \ln D^f_{-1}} \underset{(-1.67)}{-0.2933\ \ln D^f_{-2}} - \underset{(-3.82)}{0.0096\ T}$$
$$\underset{(1.55)}{+\ 0.0202\ DUM1} + u \qquad R^2=0.989;\ DW=1.91$$

Fluid Supply (Equation 2.2)

$$\ln S^f = \underset{(-3.99)}{-\ 0.5082} + \underset{(2.21)}{0.0528\ \ln (RFP/DP1HAT)} + \underset{(12.38)}{0.8683\ \ln S^f_{-1}} - \underset{(-4.53)}{0.0036\ T} - \underset{(-3.55)}{0.0228\ DUM2} + u \qquad R^2=0.989;\ DW=2.07$$

Manufacturing Demand (Equation 3.1)

$$\ln D^m = \underset{(-2.27)}{-\ 0.5631\ \ln (RMP/FPI)} + \underset{(2.55)}{0.2389\ \ln DINCOME} + \underset{(2.60)}{1.5980\ A_{25-64}}$$
$$\underset{(5.39)}{+\ 0.7654\ \ln D^m_{-1}} \underset{(-2.43)}{-\ 0.0089\ T} + \underset{(1.97)}{0.0576\ DUM3} + u \qquad R^2=0.943;\ DW=2.50$$

Manufacturing Supply (Equation 3.2)

$$\ln S^m = \underset{(-4.48)}{-\ 4.8318} + \underset{(3.66)}{0.3541\ \ln (RMP/DP2HAT)} + \underset{(2.25)}{0.3426\ \ln S^m_{-1}}$$
$$\underset{(-2.12)}{-\ 0.4281\ \ln DHWR} \underset{(-2.43)}{-\ 0.0127\ T} \underset{(-2.93)}{-\ 0.0986\ DUM4} + u \qquad R^2=0.964;\ DW=2.09$$

Table 2. Definitions of Variables Used in the Econometric Model.

Variable Name	Unit of Measurement	Description
A_{25-64}	%	Population between 25 and 64
A_{45-64}	%	Population between 45 and 64
AMP	$/cwt.	All milk price
A_{U19}	%	Population less than 19
BPI	1967=100	Nondairy beverage price index
CN	thou. head	Number of cows
DF	billion lbs./ million peo.	Fluid demand: Ratio of raw milk utilized for fluid purposes to civilian population
DHWR	$/hour	Wage rate of manufacturing sector
DINCOME	$/capita	Deflated disposable per capita income
DM	billion lbs./ million peo.	Mfg demand: Ratio of raw milk production net of fluid and government removals to civilian population
DP1HAT	$/cwt.	Deflated estimate for Class I price
DP2HAT	$/cwt.	Deflated estimated Class II price
DSCP	1967=100	Index of prices received by farmers
DUM1	0,1	Equal 1 for 1949-1965,
DUM2	0,1	Equal 1 if 1973-1974 or 1978-1983
DUM3	0,1	Equal to 1 for 1981-1985
DUM4	0,1	Equal to 1 for 1980-1985
FC	$/cwt.	Dairy ration costs
FPI	1967=100	All food price index
P2	$/cwt.	Class II price
PPC	lbs.	Production per cow
RFP	1967=100	Retail fluid milk price index
RMP	1967=100	Retail manufactured dairy product index
SF	billion lbs./ million peo.	Fluid supply: Ratio of raw milk utilized for fluid purposes to civilian population
SM	billion lbs./ million peo.	Mfg supply: Ratio of raw milk production net of fluid consumption and government removals to civilian population
SP	$/cwt.	3.67 percent butterfat support price
T	integer	Trend variable

the coefficients.[5] The procedure reflects the assumption that long-term adjustments in the cow population are not based solely on a single "snap shot" of the price ratio. In other words, while farmers react immediately to favorable slaughter cow prices by culling older cows, reaction to changes in the ratio of the all milk price and feed cost are delayed. The equation is estimated by the Gauss-Newton procedure.

Production per cow measured in pounds (PPC) was regressed on the lagged price ratio (AMP/FC), and a linear trend (T) to capture changes in the biological technology of the dairy industry. Beach and Mackinnon's maximum likelihood procedure was used to correct for first-order serial correlation.

Retail Fluid Milk Market

The fluid milk demand and supply equations were estimated by a two-stage least squares procedure. The demand and supply variables were measured as the ratio of raw milk utilized for fluid purposes measured in billion pounds divided by the civilian population measured in million persons.

Fluid demand (D^f) was estimated as a function of the ratio of retail fresh milk price index (RFP) to the nondairy beverage price index (BPI). The BPI was used as a proxy for the price of fluid milk substitutes.[6] Other explanatory variables included: deflated per capita disposable income (DINCOME); percentages of the population under nineteen years old (A_{U19}) and between forty-five and sixty-four years old (A_{45-64}); lagged demand; a linear trend (T); and a dummy variable (DUM1) with 1949 to 1965 equal to one. The signs pertaining to U_{A19} and A_{45-64} are consistent with the milk consumption patterns of the young and the old. The trend variable was included to reflect the increase in health concerns about the potential link of heart disease to consumption of whole milk. The dummy variable was selected on the basis of an empirical search. The positive estimated coefficient may reflect the

---

[5] Note that by multiplying out the lag polynomial $W(L) = (1 - w_1L - w_2L^2)$ to the rest of the equation and rearranging terms, CN can be expressed as a function of its own lags; a specification which is consistent with (1.2). Also, for stationarity, the roots of $W(L)=0$ must lie outside the unit circle, which is true only when w_1 and w_2 satisfy the following conditions: $w_2 + w_1 < 1$; ii) $w_2 - w_1 < 1$; and iii) $-1 < w_2 < 1$ (Box and Jenkins, p58). An examination of the estimated w_1 and w_2 indicates that these conditions are satisfied.

[6] The use of the price ratio RFP/BPI resulted in a more significant estimated coefficient compared to estimation of individual prices. Since the purpose of this study was to simulate impacts of alternative policies rather than to investigate the elasticity of individual consumption determinants, this approach was judged to be sufficient. Moreover, the estimated coefficients on RFP and BPI under a non-ratio specification were found to be similar in magnitude, but opposite in sign. Hence, the price ratio approach is consistent with Leamer's "simplification search."

fact that health concerns did not become significant until the mid-1960's.

The fluid supply (S^f) was regressed on the ratio of RFP to the deflated estimated Class I price (DP1HAT); supply in the previous year; a dummy variable (DUM2) with 1973 to 1974 and 1978 to 1983 equal to one, and a linear trend. The trend was included as a proxy for the costs of labor and energy needed for milk processing, while the structural dummy was selected on this basis on an empirical search. The negative estimated coefficient may be a result of the effect of the energy crises on processing costs during the associated years.

Retail Manufactured Product Market

The demand and supply equations for the manufacturing sector were estimated by a two-stage least squares procedure. Demand and supply were measured as the ratio of raw milk production net of fluid consumption and government removals to civilian population. To maintain consistency with the fluid sector, quantity variables were measured in billion pounds and the population figure in million persons.

Demand (D^m) was specified as a function of the ratio of the retail manufactured dairy product index (RMP) to the all food price index (FPI). The retail manufacturing price index was constructed by taking the average of the retail butter, cheese, and ice cream price indices, weighted by the proportion of raw milk used in making these products. The denominator was used as a proxy for the price of manufactured product substitute. Other explanatory variables specified in the demand equation included deflated per capita disposable income; the percentage of population between twenty-five and sixty-four years old (A_{25-64}); demand in the previous year; a linear trend; and a dummy variable (DUM3) with 1981 to 1985 equal to one. The positive sign associated with A_{25-64} is consistent with previous research findings that middle aged or older consumers purchase more manufactured dairy products than other groups (e.g., Putnam, et. al.). The trend was included to capture the effects of health concerns related to dairy products, while the dummy variable was selected on the basis of an empirical search. A possible explanation for the positive sign is the recent trend toward increased away-from-home consumption of food items containing dairy products.

Supply (S^m) was estimated as a function of the ratio of RMP to the deflated estimated Class II price (DP2HAT); lagged supply; deflated hourly wage rate of the manufacturing sector (DHWR); a linear trend; and a dummy variable (DUM4) with 1980 to 1985 equal to one. The trend was included to capture the supply effect of increasing energy costs over time, while the structural dummy was selected on the basis of an empirical search. A feasible explanation for its negative coefficient is the upward shift in the support price over the period of 1980 to 1985. With the large increase in the support prices, net removals have increased significantly over the years. Hence, the available supply to the retail market declined.

Policy Simulation

One of the objectives of this study was to compare the welfare effects of existing dairy policy with supply control policies such as the Harkin-Gephardt Bill. The comparison was made on the basis of consumer and producer surpluses under each policy, which were calculated using demand and supply relationships for the years 1986 to 1990. In order to maintain comparable time periods for both scenarios, it was assumed the HGB would take effect beginning in 1986 rather than in 1988.

Several pieces of information were necessary to perform the simulation. First, equations (1) to (6) (see Table 3 for a summary of the system of equations) were needed to depict the dynamics of the dairy system. Second, the policy parameters (support prices) for each scenario were required to project the instruments for the Class I and Class II prices (P1HAT and P2HAT). Third, the initial conditions for the lagged endogenous variables were needed for the dynamic part of the simulation. This information included CN_{-1}, CN_{-2}, PPC_{-1}, AMP_{-1}, and AMP_{-2} for raw milk market; Q^f_{-1} and Q^f_{-2} for fluid market; and Q^m_{-1} for manufactured market. Finally, forecast models were needed for predicting future values (1986-90) of exogenous variables (Z). Exogenous variables for the farm level market (Z^{rm}) included feed costs and deflated slaughter cow prices. Exogenous variables for the fluid market (Z^f) were population, the beverage price index, deflated income, the age group less than 19 years, and the age group between 45 and 64 years old. Finally, exogenous variables for the manufacturing market (Z^m) were the food price index, deflated income, the age group between 25 and 64, deflated hourly wage rate, and population, which was needed to convert per capita demand and supply to marketwide figures. With the exception of the population and feed cost variables, all exogenous variables were forecasted recursively using a simple five-year average.[7] The results of the forecasts are reported in the Appendix 3.

A first-order autoregressive model with a trend variable was used to forecast population to reflect the fact that population closely follows a time trend. Special consideration was also given to the feed costs forecast procedures. In this case, it was necessary to distinguish between the two policy scenarios. For the Food Security Act scenario in which there is no mandatory supply control, a simple five-year average forecasting scheme was used. However, to reflect the impact on feed costs of the grain support price provisions in the Harkin-Gephardt Bill, a different forecasting method was employed. Specifically, FC was regressed on corn and soybean prices as well as a time trend. The market prices of corn and soybeans for the simulation period were based on FAPRI's result for the crop sector.

---

[7] Experiments were made with other forecasting schemes such as autoregression. However, more accurate predictions were obtained from forecasts with emphasis on the most recent data.

Table 3. Summary of Equations.

Farm Sector

(1.1) $S^{rm} = CN * PPC,$

(1.2) $CN = CN(AMP^{*}, FC^{*}, SCP^{*}, CN_{lag}),$

(1.3) $PPC = PPC(AMP^{*}, FC^{*}, T),$

(1.4) $S^{rm} = D^{rm} = [Q^{rm}].$

Fluid Sector

(2.1) $D^{f} = D^{f}(RFP, D^{f}_{lag}, DS^{f}),$

(2.2) $S^{f} = S^{f}(RFP, P1, S^{f}_{lag}, SS^{f}),$

(2.3) $D^{f} = S^{f} = [Q^{f}].$

Manufacturing Sector

(3.1) $D^{m} = D^{m}(RMP, D^{m}_{lag}, DS^{m}),$

(3.2) $S^{m} = S^{m}(RMP, P2, S^{m}_{lag}, SS^{m}),$

(3.3) $S^{m} = D^{m} = [Q^{m}].$

Linking Relationships

(4) $Q^{rm} = Q^{f} + Q^{m} + CCC.$

(5) $AMP = P1 * (Q^{f}/Q^{rm}) + P2 * (Q^{m} + CCC)/Q^{rm}.$

Class Price Equations

(6.1) $P2HAT = f(SP),$

(6.2) $P1HAT = P2HAT + d.$

The Simulation Procedure

Figure 1 displays a flowchart of the simulation, including both market-to-market and year-to-year linkages. The market-to-market linkages reflect the recursive structure of the model, while the year-to-year linkages result from the dynamic nature of the system.

The linkages among markets are best understood by outlining the two phases of the simulation within each year. During the first phase, the farm, fluid, and manufacturing market simulations were carried out independently to produce the first period's (1986) equilibrium farm raw milk quantity (Q^{rm}) and equilibrium conditions for the two retail markets (Q^f, Q^m, RFP, and RMP). In turn, the results were used in conjunction with other information during the second phase to simulate the net government removals under the price support program and the all milk price for the same year.

To simulate Q^f for each year, (2.1) to (2.3) were solved to obtain the reduced form equation for RFP as a function of all the predetermined variables, including forecasts of Z^f, P1HAT, and lagged Q^f. In turn, the equilibrium RFP was substituted into (2.1) or (2.2) to obtain the equilibrium quantity (Q^f). The equilibrium conditions for the manufacturing market (Q^m and RMP) were simulated in a parallel manner using (3) with corresponding forecasts for Z^m, P2HAT, and lagged Q^m. The farm market simulation was performed in a slightly different fashion. The variables CN and PPC for the year were simulated using (1.2) and (1.3) with corresponding values of the exogenous variables (Z^{rm}), the lagged all milk price, lagged cow numbers, and the lagged production per cow. Raw milk supply S^{rm} is simply the product of the simulated values for CN and PPC as indicated in (1.1). By (1.4), the equilibrium raw milk quantity Q^{rm} is set as S^{rm}.

As illustrated in Figure 1, the second phase of each year's simulation consists of calculations carried out using the results of the first phase. Specifically, simulated values for Q^f, Q^m, were subtracted from simulated raw milk supply Q^{rm} to obtain the simulated value for net removals as indicated in (4). The all milk price was calculated using (5).

Finally, the year-to-year linkages in the simulation procedures are basically a function of the lagged endogenous variables for each market. In the initial year of the simulation (1986), lagged variables were drawn from the historical data (1984-1985). However, in following years, some of the lagged values came from the previous year's simulation. For example, in simulating 1987 values, 1986 values were needed for Q^f, Q^m, CN, PPC, and AMP. These values were carried forward from the first year's simulation process as indicated by the dashed lines in Figure 1. The year-to-year linkages which characterize the dynamic simulation made it necessary to perform the simulation one year at a time, carrying forward the relevant variables from one year to the next.

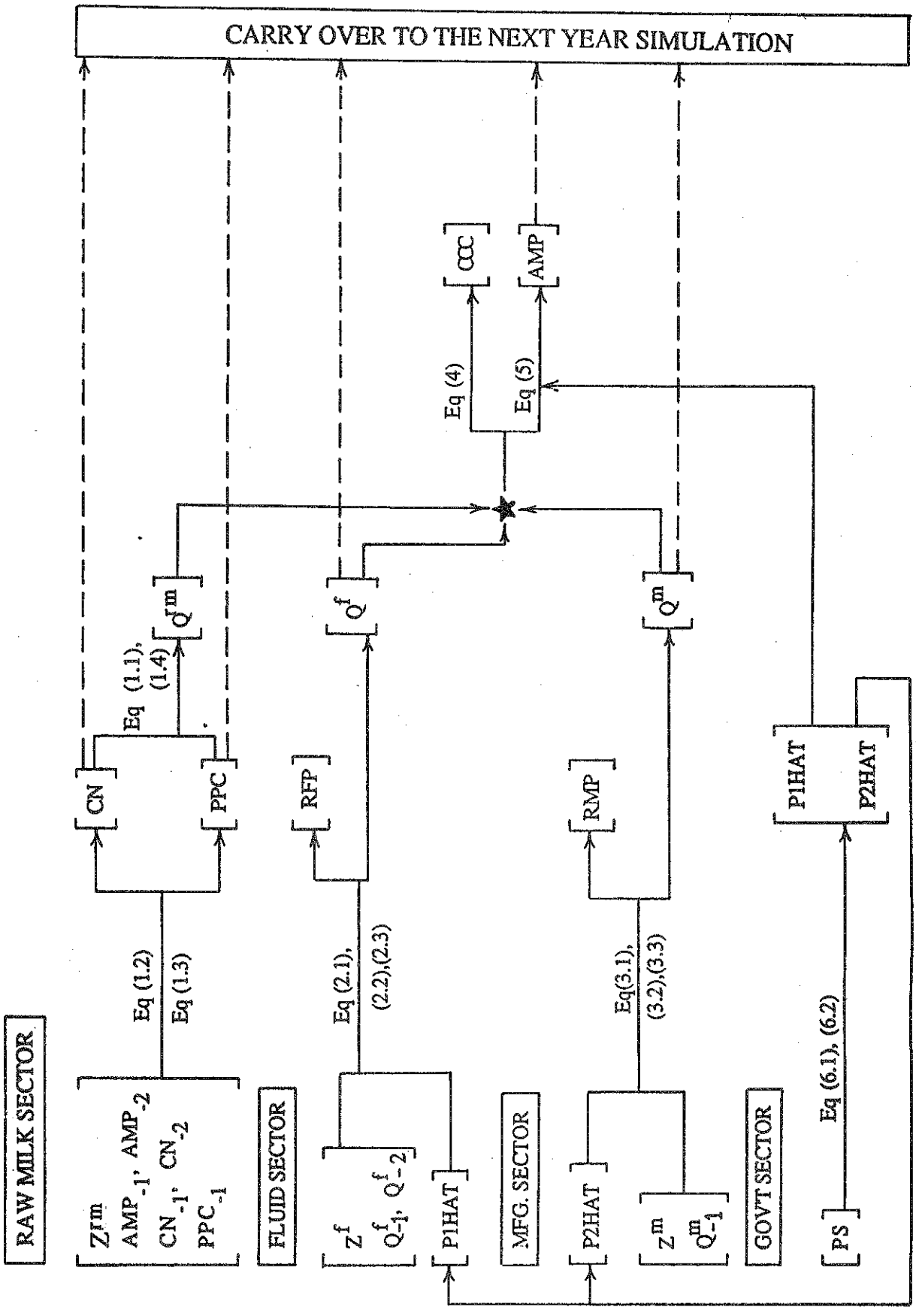

FIGURE 1. A FLOWCHART OF THE DYNAMIC SIMULATION

Consumer and producer surplus were simulated for each year from 1986 to 1990 and for each policy scenario. A detailed discussion of the calculations is contained in Appendix 4.

Differences in Simulation Between the Two Policy Scenarios

In addition to the feed cost forecasting methods, there are three important differences between the simulation procedures for the two scenarios. The first difference involves the support price levels used to calculate the instrumental variables P1HAT and P2HAT. For the FSA scenario, price support levels were set at mandated levels for 1986 and 1987. For 1988-90, support prices were set based on the simulation solutions for net removals, i.e. if net removals obtained from initial runs were greater than (less than) 5 (2.5) billion pounds, then the support price was lowered (raised) by $0.50 per hundredweight and the solutions to the system recalculated. Support prices for the HGB scenario for 1986-90, were based on 70-74 percent of parity as mandated by the Harkin-Gephardt Bill (see Appendix 5 for details on parity calculations).

Another important difference between the two scenarios is that net removals under the dairy price support program were assumed to be zero in the HGB scenario.[8] Therefore, for the HGB policy simulation, the farm market quantity, Q^{rm}, is simply calculated as the sum of commercial disappearance, Q^{f} and Q^{m}. Because it is assumed that farmers do not produce over their quotas, cow numbers and production per cow were not simulated in the HGB scenario. In contrast, the FSA scenario simulation involves simulating CN and PPC to obtain Q^{rm}. Net removals were calculated as the difference between total supply of raw milk and commercial disappearance.

An adjustment was also necessary for the cow number simulations in the FSA scenario to reflect the dairy herd liquidation that occurred due to the Dairy Termination Program. The simulated cow numbers variables were reduced by 338.85 thousand cows in 1986 and 206.23 thousand cows in 1987 to reflect the impact of the month of liquidation on annual average cow numbers.

---

[8] It was assumed that all farmers stayed within their marketing quotas in the HGB scenario, i.e there was no over-quota production. This assumption was necessary since there is no a priori information on supply response to the over-quota price penalty. It was also assumed that government purchases for social programs were zero since these outlays have been trivial compared to total dairy price support program outlays.

Simulation Results

Table 4 presents the simulated equilibrium quantities and prices for both scenarios. In the farm sector, milk production under the FSA is relatively stable over the five-year period, declining slightly from 1986 to 1988 and increasing moderately in 1989 and 1990. By contrast, under the HGB production consistently declines over the entire period. The simulated all milk prices for the HGB scenario are substantially higher than for the FSA scenario. In addition, the HGB results in steadily increasing all milk prices over the simulation period, compared to the relatively stable prices yielded by the FSA.

With respect to the fluid sector, the equilibrium quantity is stable over time regardless of the policy adopted, reflecting highly inelastic demand. Under the FSA, Class I and retail prices remain stable over time, unlike the HGB scenario, in which prices increase rapidly. The difference stems from the influence of support prices, which increase rapidly under the Harkin-Gephardt Bill (see bottom row in Table 4). In contrast with the fluid sector, the equilibrium quantity in the manufacturing sector differs markedly depending on the policy adopted. The FSA scenario is characterized by higher quantities and lower prices, as compared to the HGB. In addition, quantity increases over time in the FSA scenario, while it declines in the HGB scenario.

A comparison of the results for fluid and manufacturing sectors under the HGB leads to the conclusion that most, if not all, of the adjustments in the marketplace occur in the manufacturing sector. Table 4 also displays net CCC purchases for the period 1986-1990. Under the FSA, purchases decline by about two-thirds by the end of the simulation period.

Simulated processor income and government support expenditures are reported in Table 5. Total income to processors net of raw milk costs is lower under the HGB than the FSA. Furthermore, a change from the current policy to the HGB would have a more negative impact on manufacturing processors than fluid processors. Government costs decline steadily for the FSA scenario.[9]

The welfare impacts of moving from current policy to the HGB are displayed in Table 6. Producer surplus under the HGB is about $5 billion higher per year on average than the FSA scenario. At the same time, consumer surplus in the HGB situation is about $12 billion lower per year on average than the FSA case. Most of the loss in consumer surplus from the change in policies comes from the more price-elastic manufacturing market.

---

[9] Government costs of the support program were calculated by taking the product of net removals, times the support price, times a constant, c, which represents the mark up of the average purchase price for butter, nonfat dry milk, and cheese. The constant c was estimated using 1985 values and was equal to the weighted average purchase price in 1985, divided by the 1985 support price.

Table 4. Comparisons of the Food Security Act and the Harkin-Gephardt Bill on Market Prices and Quantities.

Variable	Policy Scenario	Simulation 1986	1987	1988	1989	1990
FARM SECTOR:						
Milk Production	FSA	144.74	142.28	141.45	141.50	142.70
(bil. pounds)	HGB	129.80	128.95	127.85	126.55	125.03
All Milk Price	FSA	12.24	11.97	11.80	12.29	12.29
($/cwt.)*	HGB	15.59	16.19	16.93	17.76	18.47
FLUID SECTOR:						
Equilibrium Quantity	FSA	52.54	52.75	52.93	53.08	53.26
(bil. pounds)	HGB	52.28	52.25	52.23	52.29	52.38
Class I Price	FSA	13.73	13.43	13.25	13.73	13.73
($/cwt.)*	HGB	16.99	17.57	18.30	19.11	19.91
Fluid Wholemilk Retail Price	FSA	19.83	18.31	18.83	20.36	21.77
($/cwt. of raw milk equivalent)*	HGB	22.37	21.67	23.70	26.45	29.37
MANUFACTURING SECTOR:						
Equilibrium Quantity	FSA	81.87	84.46	86.22	86.30	86.01
(bil. pounds)	HGB	77.52	76.70	75.62	74.27	72.66
Class II Price	FSA	11.43	11.13	10.95	11.43	11.43
($/cwt.)*	HGB	14.69	15.27	16.00	16.81	17.51
Manufacturing Retail Price	FSA	17.73	18.09	18.44	19.13	19.31
($/cwt. of raw milk equivalent)*	HGB	19.54	19.93	20.43	20.90	21.24
GOVERNMENT SECTOR:						
Net CCC Purchases	FSA	10.33	5.05	2.44	2.09	3.52
(bil. pounds)	HGB	0.00	0.00	0.00	0.00	0.00
3.67% Butterfat Support	FSA	11.60	11.29	11.10	11.60	11.60
Price ($/cwt.)*	HGB	14.99	15.59	16.35	17.19	17.92

* Deflated by the forecasted Consumer Price Index (1986=100).

Table 5. Comparisons of the Impacts of the Food Security Act and the Harkin-Gephardt Bill on Processor Incomes and Government Costs.

Variable	Policy Scenario	Simulation 1986	1987	1988	1989	1990
		Billion $*				
Total Processor Income Net of Raw Milk Costs	FSA	8.37	8.30	9.28	9.83	10.72
	HGB	6.57	5.61	6.00	6.66	7.44
Fluid Sector	FSA	3.21	2.53	2.87	3.41	4.15
	HGB	2.81	2.10	2.74	3.72	4.81
Manufacturing Sector	FSA	5.16	5.78	6.41	6.43	6.57
	HGB	3.76	3.51	3.26	2.94	2.63
Direct Government Costs of Price Support Program	FSA	1.66	0.78	0.37	0.33	0.50
	HGB	0.00	0.00	0.00	0.00	0.00

* Deflated by the forecasted Consumer Price Index (1986=100).

Table 6. Economic Welfare Under the Harkin-Gephardt Bill as Compared to the Food Security Act.

Variable	1986	1987	1988	1989	1990
	----------Billion $*----------				
Change in Producer Surplus	3.459	4.602	5.818	5.969	6.603
Change in Consumer Surplus	-6.508	-9.753	-12.896	-14.382	-16.336
Fluid Sector	-1.532	-2.124	-3.023	-3.691	-4.528
Manufacturing Sector	-4.976	-7.629	-9.873	-10.691	-11.808

* Deflated by the forecasted Consumer Price Index (1986=100).

Summary and Policy Implications

This study has analyzed the differential impacts of the FSA and the HGB on farm and retail milk markets. The analysis was based on an annual econometric model and a dynamic simulation of the dairy sector from 1986 to 1990.

The results of the simulation show that over time, the FSA would be successful in reversing the trend of mounting dairy surpluses. The results also indicate that the HGB would achieve its intended goals: to eliminate dairy program costs associated with price supports and to raise producer prices and incomes.

However, the benefits accruing to producers under the HGB would be achieved only at the expense of consumers and processors. Moreover, the resulting transfers in welfare are not trivial in magnitude. Finally, the effects of the HGB would not be evenly distributed across sectors, since the manufacturing sector would bear a larger burden than the fluid market due to differences in demand elasticity.

To summarize, the study provides insights for policy makers who are comparing various approaches for resolving current surplus problems in the dairy industry. If the primary goal is to reduce government purchases, it appears that the Food Security Act is moving the industry in the appropriate direction. However, if in addition to reducing government purchases, the goal of dairy policy is to increase producer incomes, the Harkin-Gephardt Bill is a better means for achieving these objectives. Obviously, policy makers must weigh the gains to dairy farmers against the losses to consumers and processors.

References

Beach, C.M., and J.G. Mackinnon. "A Maximum Likelihood Procedure for Regression With Auto-Correlated Errors." **Econometrica** 46(1978): 51-58.

Box, J., and G. Jenkins. **Time Series Analysis: Forecasting and Control**. Sanfransico: Holden-Day, 1976.

Chavas, J.P., and R.M. Klemme. "Aggregate Milk Supply Response and Investment Behavior on U.S. Dairy Farms." **American Journal of Agricultural Economics** 68(1986): 55-66.

Council of Economic Advisors. **Economic Report of the President**. Washington D.C., various issues.

Food and Agricultural Policy Research Institute. "Comparative Analysis of Selected Policy Options for U.S. Agriculture." **FAPRI Staff Report #1-87**, Center for National Food and Agricultural Policy, Department of Agricultural Economics, University of Missouri and Center for Trade and Agricultural Policy, Department of Economics, Iowa State University, February 1987.

Food and Agricultural Policy Research Institute. "The Commodity Supply Management Program." **FAPRI Staff Report #2-87**, Center for National Food and Agricultural Policy, Department of Agricultural Economics, University of Missouri and Center for Trade and Agricultural Policy, Department of Economics, Iowa State University, February 1987.

Kaiser, H.M. "A Primer on Federal Milk Marketing Orders in the United States." **A.E. Ext. 86-15**, Department of Agricultural Economics, Cornell University, April 1986.

Knutson, R.D., E.G. Smith, J.W. Richardson, J.B. Penson, Jr., D.W. Hughs, M.S. Paggi, R.D. Yonkers, and D.T. Chen. "Policy Alternatives for Modifying the 1985 Farm Bill." Agricultural and Food Policy Center, **Paper B-1561**, Texas Agricultural Research Station and Extension Service, The Texas A&M University, January 1987.

LaFrance, J.T., and H. de Gorter. "Regulation in a Dynamic Market: the U.S. Dairy Industry." **American Journal of Agricultural Economics** 67(1985): 821-32.

Leamer, E.E. **Specification Searches: Ad Hoc Inference With Nonexperimental Data**. New York: John Wiley & Sons, 1978.

Putnam, J.N. II, S.E. Barnard, H.M. Kaiser, and F.C. Webster. "Dairy Marketing in the Northeast: Summary Version." Published by the **Springfield and Baltimore Farm Credit Banks**, August 1987.

Thraen, C.S. and J.W. Hammond. "Price Supports, Risk Aversion, and U.S. Dairy Policy." **Economic Report 83-9**, Department of Agricultural and Applied Economics, University of Minnesota, June 1983.

U.S. Department of Labor, Bureau of Labor Statistics. **Consumer Price Index Detailed Report**. Washington D.C., various issues.

U.S. Department of Agriculture. **Agricultural Statistics**. Washington D.C., various issues.

U.S. Department of Agriculture, Economic Research Service. **Dairy Situation and Outlook**. Washington D.C., various issues.

U.S. Department of Agriculture, Agricultural Marketing Service. **Federal Milk Order Market Statistics Annual Summary**. Washington D.C., various issues.

Appendices

Appendix 1

Results of Knutson, et. al. and FAPRI's Studies

Variable	Policy Scenario	FAPRI Study 1986	FAPRI Study 1987	FAPRI Study 1988	FAPRI Study 1989	FAPRI Study 1990	AFPC Study 1986	AFPC Study 1987	AFPC Study 1988	AFPC Study 1989	AFPC Study 1990
Milk Cows (mil)	FSA	10.85	10.42	10.63	10.70	10.76	10.80	10.50	10.30	10.10	9.90
	HG	N/A	9.15	9.18	9.17	9.17	N/A	N/A	8.50	8.20	7.90
Yield/Cow (thous lbs)	FSA	13.37	13.48	13.62	13.68	13.92	13.53	13.87	14.21	14.57	14.93
	HG	N/A	13.24	13.29	13.36	13.42	N/A	N/A	14.30	14.66	15.03
Milk Production (bil lbs)	FSA	145.00	140.45	144.72	146.44	149.79	145.70	144.00	146.00	147.20	147.80
	HG	N/A	121.15	122.00	122.51	123.06	N/A	N/A	120.60	118.80	117.80
Quotas as Percent of Base (135.5 bil lbs)	HG	N/A	89.41%	90.04%	90.41%	90.82%	N/A	N/A	89.00%	87.68%	86.94%
All Milk Price ($/cwt.)	FSA	12.35	12.29	11.62	11.10	10.61	12.28	12.28	11.79	11.77	11.75
	HG	N/A	16.95	17.79	18.71	19.51	N/A	N/A	16.35	17.43	18.26
Net Income ($ bil)	FSA	N/A	N/A	N/A	N/A	N/A	6.50	5.90	4.40	4.00	2.50
	HG	N/A	N/A	N/A	N/A	N/A	N/A	N/A	9.00	9.40	9.50
Fluid (bil lbs ME)	FSA	51.96	51.83	51.53	51.23	50.95	N/A	N/A	N/A	N/A	N/A
	HG	N/A	50.85	50.16	49.47	48.81	N/A	N/A	N/A	N/A	N/A
Manufacturing (bil lbs ME)	FSA	85.12	86.17	88.68	90.51	93.03	N/A	N/A	N/A	N/A	N/A
	HG	N/A	70.30	71.84	73.04	74.25	N/A	N/A	N/A	N/A	N/A
Total	FSA	137.08	138.00	140.21	141.74	143.98	135.30	136.70	140.30	141.70	143.10
	HG	N/A	121.15	122.00	122.51	123.06	N/A	N/A	120.60	118.80	117.80
Price Support ($/cwt.)	FSA	11.60	11.29	10.60	10.10	9.60	11.10	11.10	10.60	10.60	10.60
	HG	N/A	16.95	17.79	18.71	19.51	N/A	N/A	15.02	16.07	16.88
Net CCC Removals (bil lbs)	FSA	10.85	6.21	9.66	9.86	10.97	10.40	7.30	5.70	5.50	4.70
	HG	N/A	0.00	0.00	0.00	0.00	N/A	N/A	0.00	0.00	0.00
Government Costs ($ bil)	FSA	2.39	1.59	1.49	1.46	1.56	2.12	1.31	0.66	0.64	0.55
	HG	N/A	0.00	0.00	0.00	0.00	N/A	N/A	0.00	0.00	0.00

Appendix 2

The Data and Sources

All the data used in the econometric estimation of the dairy sector are listed in Table A.2. The time series is annual data from 1949 to 1985. The numbers in parentheses at the end of each column refer to the sources where the data were obtained. The numbers corresponding to each source is defined as the following:

(1) U.S. Department of Agriculture, Economic Research Service. **Dairy Situation and Outlook.** Washington D.C., various issues.

(2) U.S. Department of Agriculture. **Agricultural Statistics.** Washington D.C., various issues.

(3) Council of Economic Advisors. **Economic Report of the President.** Washington D.C., various issues.

(4) Thraen, C.S. and J.W. Hammond. "Price Supports, Risk Aversion, and U.S. Dairy Policy." **Economic Report 83-9,** Department of Agricultural and Applied Economics, University of Minnesota, June 1983.

(5) LaFrance, J.T., and H. de Gorter. "Regulation in a Dynamic Market: the U.S. Dairy Industry." **American Journal of Agricultural Economics** 67(1985): 821-32.

(6) U.S. Department of Agriculture, Agricultural Marketing Service. **Federal Milk Order Market Statistics Annual Summary.** Washington D.C., various issues.

(7) U.S. Department of Labor, Bureau of Labor Statistics. **Consumer Price Index Detailed Report** . Washington D.C., various issues.

(8) Manufacturing product supply/demand is equal to production per cow times cow numbers minus fluid supply/demand minus government net removals.

Table A.2. Data Used in Econometric Estimation of Dairy Industry, 1949-64.

YEAR	MANF PRICE ($/CWT)	CLASS I PRICE ($/CWT)	ALL MILK PRICE ($/CWT)	MILK PRICE SUPPORT ($/CWT)	DAIRY RATION COST/CWT ($/CWT)	SLAUT COW PRICE ($/CWT)	DAIRY COW NUMBERS (1000)	PRO-DUCTION PER COW (LBS)	SUPPLY (BIL LBS)	RAW MILK UTILIZED IN FLUID (BIL LBS)	RAW MILK UTILIZED IN MANF (BIL LBS)	CCC NET REMOVAL (BIL LBS)
1949	3.10	5.08	3.95	3.14	3.11	18.41	22,024	5,272	116.11	41.84	71.78	2.49
1950	3.16	4.86	3.89	3.07	3.16	21.48	21,944	5,314	116.61	43.10	72.38	1.13
1951	3.85	5.49	4.58	3.60	3.58	27.14	21,505	5,333	114.69	44.40	70.90	-0.62
1952	4.06	5.76	4.85	3.85	3.84	21.20	21,338	5,374	114.67	45.50	68.83	0.34
1953	3.48	5.43	4.32	3.74	3.50	13.60	21,691	5,542	120.21	46.20	63.81	10.20
1954	3.14	5.15	3.97	3.15	3.36	12.81	21,581	5,657	122.08	47.70	65.80	8.59
1955	3.15	5.18	4.01	3.15	3.16	12.62	21,044	5,842	122.94	49.20	69.05	4.69
1956	3.25	5.32	4.14	3.22	3.05	12.25	20,501	6,090	124.85	50.70	68.95	5.21
1957	3.27	5.45	4.21	3.25	3.05	14.84	19,774	6,303	124.64	51.80	66.97	5.87
1958	3.15	5.40	4.13	3.06	2.94	19.28	18,711	6,585	123.21	52.10	66.45	4.66
1959	3.17	5.40	4.16	3.06	2.93	18.80	17,901	6,815	122.00	52.40	66.38	3.21
1960	3.25	5.48	4.21	3.10	2.92	16.42	17,515	7,029	123.11	53.00	67.01	3.10
1961	3.36	5.43	4.22	3.40	2.92	16.44	17,243	7,290	125.70	52.60	65.08	8.02
1962	3.20	5.35	4.09	3.11	2.95	16.35	16,842	7,496	126.25	53.30	62.22	10.72
1963	3.21	5.31	4.10	3.14	3.04	15.64	16,260	7,700	125.20	54.30	63.16	7.75
1964	3.26	5.35	4.15	3.15	3.03	13.73	15,677	8,099	126.97	54.90	64.39	7.68
SOURCES	(4) (2)	(2) (5) (6)	(1) (2)	(1)	(1) (2)	(1) (4)	(1)	(1)	(1)	(1)	(8)	(1)

Table A.2. Data Used in Econometric Estimation of Dairy Industry, 1965-85.

YEAR	MANF PRICE ($/CWT)	CLASS I PRICE ($/CWT)	ALL MILK PRICE ($/CWT)	MILK PRICE SUPPORT ($/CWT)	DAIRY RATION COST/CWT ($/CWT)	SLAUT COW PRICE ($/CWT)	DAIRY COW NUMBERS (1000)	PRO-DUCTION PER COW (LBS)	SUPPLY (3IL LBS)	RAW MILK UTILIZED IN FLUID (BIL LBS)	RAW MILK UTILIZED IN MANF (BIL LBS)	CCC NET REMOVAL (BIL LBS)
1965	3.34	5.39	4.23	3.24	3.03	15.07	14,953	8,305	124.18	55.40	63.12	5.67
1966	3.97	5.66	4.81	3.75	3.15	18.44	14,071	8,522	119.91	55.40	63.87	0.65
1967	4.06	6.07	5.02	4.00	3.23	17.22	13,415	8,851	118.74	54.00	57.31	7.43
1968	4.22	6.34	5.24	4.28	3.10	17.65	12,832	9,135	117.22	53.70	59.37	4.15
1969	4.45	6.63	5.49	4.28	3.15	19.79	12,307	9,434	116.10	52.80	58.83	4.48
1970	4.70	6.88	5.71	4.66	3.28	20.94	12,000	9,751	117.01	52.00	59.24	5.77
1971	4.86	7.08	5.87	4.93	3.44	21.21	11,839	10,015	118.57	51.80	59.50	7.27
1972	5.08	7.23	6.07	4.93	3.52	24.86	11,700	10,259	120.03	52.30	62.39	5.35
1973	6.20	8.18	7.14	5.34	4.88	32.90	11,413	10,119	115.49	52.00	61.30	2.19
1974	7.13	9.79	8.33	6.57	6.23	25.45	11,230	10,293	115.59	50.50	63.75	1.35
1975	7.63	10.10	8.75	7.36	6.25	21.63	11,139	10,360	115.40	51.10	62.26	2.04
1976	8.56	11.06	9.66	8.16	6.30	26.80	11,032	10,894	120.18	51.50	67.45	1.24
1977	8.70	11.07	9.72	9.00	6.20	26.11	10,945	11,206	122.65	51.40	65.17	6.08
1978	9.65	11.85	10.60	9.43	6.08	37.80	10,803	11,243	121.46	51.20	67.52	2.74
1979	11.10	13.22	12.00	10.61	6.68	50.00	10,734	11,492	123.36	51.40	69.84	2.12
1980	12.01	14.55	13.00	12.33	7.42	45.70	10,799	11,891	128.41	50.90	68.71	8.80
1981	12.72	14.69	13.80	13.39	8.02	41.30	10,898	12,183	132.77	50.20	69.71	12.86
1982	12.60	14.63	13.61	13.10	7.45	38.50	11,011	12,306	135.50	49.30	71.92	14.28
1983	12.61	14.69	13.58	12.98	7.88	38.10	11,098	12,577	139.58	49.70	73.07	16.81
1984	12.49	14.41	13.46	12.60	8.16	37.40	10,840	12,495	135.45	50.60	76.21	8.64
1985	11.72	13.88	12.75	11.97	7.35	36.53	11,025	13,031	143.67	52.00	78.49	13.17
SOURCES	(4) (2)	(2) (5) (6)	(1) (2)	(1)	(1) (2)	(1) (4)	(1)	(1)	(1)	(1)	(8)	(1)

Table A.2. Data Used in Econometric Estimation of Dairy Industry, 1949-64, (Continued).

YEAR	FRESH MILK PRICE INDEX (1967=100)	MANUF MILK PRICE INDEX (1967=100)	NONDAIRY BEVERAGE PRICE INDEX (1967=100)	ALL FOOD PRICE INDEX (1967=100)	CONSUMER PRICE INDEX (1967=100)	INDEX OF PRICES REC BY FARMERS (1967=100)	HOURLY EARNINGS MANUF ($/HOUR)	DISPOSABLE PER CAPITA INCOME (CUR $)	CIVILIAN POPULATION BY AGE			
									POPU-LATION (MIL)	--------PERCENTAGE---------- 1-19 (%)	25-64 (%)	45-64 (%)
1949	74.0	81.87	61.2	73.5	71.4	100.0	1.38	1,260	149.2	0.337	0.505	0.204
1950	71.9	81.93	86.7	74.5	72.1	101.8	1.44	1,368	152.3	0.339	0.503	0.203
1951	79.7	89.71	95.5	82.8	77.8	120.0	1.56	1,475	154.9	0.343	0.500	0.202
1952	83.7	92.70	96.1	84.3	79.5	114.5	1.64	1,528	157.6	0.347	0.497	0.202
1953	82.7	88.47	98.8	83.0	80.1	101.8	1.74	1,599	160.2	0.352	0.494	0.202
1954	80.9	82.79	117.3	82.8	80.5	98.2	1.78	1,604	163.0	0.357	0.490	0.202
1955	81.1	81.67	105.1	81.6	80.2	92.7	1.85	1,687	165.9	0.362	0.486	0.202
1956	83.6	82.86	109.9	82.2	81.4	90.9	1.95	1,769	168.9	0.367	0.482	0.202
1957	86.5	84.85	109.1	84.9	84.3	92.7	2.04	1,833	172.0	0.372	0.477	0.201
1958	88.1	85.24	101.4	88.5	86.6	100.0	2.10	1,865	174.9	0.377	0.471	0.201
1959	89.0	86.50	92.1	87.1	87.3	96.4	2.19	1,946	177.8	0.381	0.466	0.201
1960	91.1	86.55	91.5	88.0	88.7	94.5	2.26	1,986	180.7	0.385	0.461	0.200
1961	91.4	88.56	91.5	89.1	89.6	96.4	2.32	2,034	183.7	0.388	0.456	0.200
1962	90.9	87.68	90.1	89.9	90.6	96.4	2.39	2,123	186.5	0.391	0.452	0.200
1963	90.5	87.61	91.2	91.2	91.7	96.4	2.45	2,197	189.2	0.391	0.448	0.200
1964	90.8	88.34	102.3	92.4	92.9	94.5	2.53	2,352	191.9	0.392	0.445	0.200
SOURCES	(1) Constructed From (1). See Text.		(4) (7)	(1)	(1)	(3)	(3)	(3)	(3)	(3)	(3)	(3)

Table A.2. Data Used in Econometric Estimation of Dairy Industry, 1965-85, (Continued).

YEAR	FRESH MILK PRICE INDEX (1967=100)	MANUF MILK PRICE INDEX (1967=100)	NONDAIRY BEVERAGE PRICE INDEX (1967=100)	ALL FOOD PRICE INDEX (1967=100)	CONSUMER PRICE INDEX (1967=100)	INDEX OF PRICES REC BY FARMERS (1967=100)	HOURLY EARNINGS MANUF ($/HOUR)	DISPOSABLE PER CAPITA INCOME (CUR $)	CIVILIAN POPULATION BY AGE: POPULATION (MIL)	PERCENTAGE 1-19 (%)	PERCENTAGE 25-64 (%)	PERCENTAGE 45-64 (%)
1965	90.3	89.44	101.5	94.4	94.5	98.2	2.61	2,505	193.4	0.393	0.442	0.200
1966	96.1	96.87	100.9	99.1	97.2	105.5	2.71	2,675	197.0	0.393	0.440	0.201
1967	100.0	100.00	100.0	100.0	100.0	100.0	2.82	2,828	199.2	0.389	0.440	0.202
1968	104.1	101.02	101.9	103.6	104.2	101.8	3.01	3,037	201.4	0.385	0.441	0.204
1969	107.0	103.67	104.6	108.9	109.8	107.3	3.19	3,239	205.4	0.380	0.442	0.204
1970	111.6	108.55	117.4	114.9	116.3	109.1	3.35	3,489	204.8	0.376	0.441	0.205
1971	114.6	111.57	121.6	118.4	121.3	112.7	3.57	3,740	204.0	0.371	0.440	0.205
1972	116.3	113.33	121.3	123.5	125.3	125.5	3.82	4,000	208.1	0.366	0.445	0.204
1973	127.3	123.20	130.2	141.4	133.1	178.2	4.09	4,481	211.5	0.360	0.448	0.204
1974	152.5	141.14	155.6	161.7	147.7	190.9	4.42	4,855	213.3	0.354	0.452	0.203
1975	152.7	151.20	179.0	175.4	161.2	183.6	4.83	5,291	210.7	0.348	0.454	0.203
1976	160.7	176.08	214.0	180.8	170.5	185.5	5.22	5,744	216.7	0.340	0.458	0.202
1977	162.3	182.60	322.4	192.2	181.5	181.8	5.68	6,262	220.5	0.333	0.462	0.200
1978	171.7	199.13	340.8	211.4	195.4	209.1	6.17	6,968	223.5	0.326	0.466	0.199
1979	191.5	224.64	357.8	234.5	217.4	240.0	6.70	7,682	224.6	0.321	0.470	0.197
1980	208.4	249.54	395.8	254.6	246.8	243.6	7.27	8,422	229.2	0.315	0.474	0.195
1981	220.2	271.01	412.6	274.6	272.4	252.7	7.99	9,247	228.2	0.311	0.479	0.194
1982	221.4	278.08	424.2	285.7	289.1	241.8	8.49	9,732	229.7	0.306	0.483	0.192
1983	222.9	282.55	432.2	291.7	298.4	243.6	8.83	10,339	234.7	0.302	0.488	0.190
1984	224.6	286.74	443.0	302.9	311.1	258.2	9.18	11,279	234.4	0.298	0.493	0.189
1985	228.1	293.52	451.7	309.8	322.2	232.7	9.52	11,727	236.2	0.307	0.483	0.192
SOURCES	(1) Constructed From (1). See Text.		(4) (7)	(1)	(1)	(3)	(3)	(3)	(3)	(3)	(3)	(3)

Appendix 3

Forecasted Values of Exogenous Variables

The forecasted values of the exogenous variables for the simulation period are listed in below.

YEAR	INCOME	POP	BPI	FPI	A_{U19}
1986	12.3880	239.117	432.740	292.940	.304840
1987	13.0162	241.860	436.768	296.608	.303628
1988	13.6730	244.481	439.282	298.790	.303094
1989	14.3398	247.015	440.698	300.208	.303252
1990	14.9520	249.487	440.238	299.669	.304283

YEAR	A_{45-64}	A_{25-64}	HWR	FC-FSA	FC-HGB
1986	.191360	.485220	8.80200	7.77200	8.99248
1987	.190912	.486524	8.96440	7.72240	9.34512
1988	.190734	.487129	9.05928	7.77688	9.71372
1989	.190821	.486955	9.10514	7.75626	10.0586
1990	.191166	.485825	9.09016	7.67551	10.4434

YEAR	SCP	CPI	FPR*
1986	38.3660	298.640	246.000
1987	37.7792	303.888	244.600
1988	37.6350	306.846	245.120
1989	37.5420	308.535	245.344
1990	37.5705	308.022	242.813

*FPR is farm price received, 1967=100.

Appendix 4

Welfare Calculations

Consumer surplus is a measure of well-being, calculated as the area below the demand curve and above the equilibrium price. The first step in calculating consumer surplus in this study was to use the simulation results to compute a marketwide demand curve for each policy scenario for each year from 1986-1990. Consumer surplus was calculated for both the manufacturing and fluid markets.

To outline the general procedure used, consider the "per capita" demand (D/POP) for either fluid or manufactured dairy products as a function of the own product price index (PI) and a constant term which reflects the consumption impact of all other predetermined (exogenous and lagged endogenous) variables.

$$\text{(A5.1)} \qquad \ln (D/POP) = a_0 + a_1 \ln PI.$$

In the above, D is measured in billion pounds, POP in million of persons and PI is an index. After suitable transformations of variables, meanwhile preserving the equality of (A5.1), the above can be expressed as:

$$\text{(A5.2)} \qquad \ln Q = A_0 + a_1 \ln P,$$

where Q (measured in cwt.) is the "marketwide" quantity demanded and P (measured in $/cwt.) is the nominal retail price of the product in question. Denoting a_1 as w_1 and the exponential of A_0 as W_0, (A5.2) is equivalent to:

$$\text{(A5.3)} \qquad Q = W_0 \, P^{w1}.$$

Since the magnitude of W_0 depends on the values of the predetermined variables, it is not a constant over time. It differs for each year of the simulation and for each policy scenario. The consumer surplus for the market considered is:

$$\text{(A5.4)} \qquad CS = \int_0^{Q^*} P(Q)\,dq - P^*Q^*,$$

where the Q^* and P^* are the simulated equilibrium values. However, due to the logarithmic specification of the original demand equation, the demand curve approaches the price and quantity axes asymptotically, and hence the area for the consumer surplus is infinite. The procedure used to overcome this problem was to arbitrarily set a "choke-off" price (p^{choke}), above which it is reasonable to assume zero demand. The choke-off price was set at five times the average simulated retail prices. As the price of the products increase five folds, it is reasonable to assume that the demand becomes trivial. Hence, the consumer surplus is:

$$(A5.5) \qquad CS = \int_{p^*}^{p^{choke}} Q(P)\,dP,$$

or

$$(A5.6) \qquad CS = [W_0(1/w_1+1)P^{(w1+1)}]\Big|_{p^*}^{p^{choke}},$$

Consumer surplus was calculated in this fashion for each policy scenario and for both the manufacturing and fluid markets.

Benefits to the farm market were measured using producer surplus, which is the area above the supply curve and to the left of the equilibrium quantity. Producer surplus was calculated for each year of the simulation and for each policy scenario.

Recall that production per cow times cow numbers yields the total farm supply. The PPC and CN equations can be written more generally:

$$(A5.7) \qquad \ln PPC = g_0 + g_1 \ln P,$$

$$(A5.8) \qquad \ln CN = f_0 + f_1 \ln P,$$

where g_0 and f_0 represent the effect on the dependent variables (PPC and CN) of the associated explanatory variables other than all milk price (which is denoted as P now). In the above PPC is measured in pounds, CN in thousand heads, and P in \$/cwt. Performing suitable transformations to make the units of measurement consistent between price (\$/cwt.) and quantity (cwt.), the "supply curve" can be expressed as:

$$(A5.9) \qquad Q = W_0\, P^{w1},$$

where w_1 substitutes for (g_1+f_1). Thus producer surplus is:

$$(A5.10) \qquad PS = P^*Q^* - \int_0^{Q^*} P(Q)\,dq,$$

where the inverses supply curve $P(Q)$ is $W_0^{(-1/w1)}Q^{(1/W1)}$.

or

$$(A5.11) \qquad PS = P^*Q^* - [w_0^{(-1/w1)}(w_1/w_1+1)Q^{(w1+1/w1)}]\Big|_0^{Q^*},$$

where superscript * indicates equilibrium values.

Note that the problem related to functional form which arose when calculating consumer surplus is eliminated when working with producer surplus because the area under the supply curve between the origin and the equilibrium quantity is a finite number. However, there is one

aspect of the supply situation that warrants special mention. The equilibrium quantity Q^* is realized quantity supplied which is based on price expectations (as specified in (1.2) and (1.3)) and **not** on realized price (P^*). As such, the calculated producer surplus is an ex-post welfare measure. Furthermore, for the second scenario, P^* and Q^* are the mandated price and quota levels.

Appendix 5

Support Price Calculations for the HGB Scenario

Under provisions in the Harkin-Gephardt Bill, determination of support prices for agricultural commodities would return to the parity formula. For the years considered in this study, the support price for Grade B milk would be set at 70 percent of parity in 1986 and would be increased by one percentage point each year.

The following steps illustrate how the support price for milk would be calculated under the parity formula. First, the Secretary of Agriculture would calculate the adjusted base price (ABP), which is equal to:

$$(A4.1) \quad ABP = \frac{\text{10-Year Average All Milk Wholesale Price}}{\text{10-Year Average Index of Prices Received by Farmers.}}$$

Next, the ABP is multiplied by the current index of prices paid to get the 100 percent of parity all milk wholesale price (AMP), i.e.

$$(A4.2) \quad AMP = ABP * \text{Current Index of Prices Paid by Farmers.}$$

To obtain the parity equivalent for the manufacturing grade milk price (MGP), the AMP is multiplied by the ratio of the ten-year average MGP to the ten-year average AMP. One hundred percent parity for the milk support price ($SP_{100\%}$) is therefore equal to:

$$(A4.3) \quad SP_{100\%} = AMP * \frac{\text{10-Year Average MGP}}{\text{10-Year Average AMP.}}$$

Finally, $SP_{100\%}$ is multiplied by 70 percent of parity to obtain the support price for 1986.

In this study, the estimates of prices received and paid under the Harkin-Gephardt Bill were based on projections by FAPRI. Based on these projections, the milk support prices per hundredweight used in this study were: $14.99 in 1986, $15.59 in 1987, $16.35 in 1988, $17.19 in 1989, and $17.92 in 1990. These prices are lower than those used in the FAPRI study. This is due to the fact that FAPRI used the AMP rather than the MGP. Since the support price is based on manufacturing grade milk, the estimates used in this study were judged to be more realistic than FAPRI's estimates.