AgEcon SEARCH
RESEARCH IN AGRICULTURAL & APPLIED ECONOMICS

The World's Largest Open Access Agricultural & Applied Economics Digital Library

This document is discoverable and free to researchers across the globe due to the work of AgEcon Search.

Help ensure our sustainability.

Give to AgEcon Search

AgEcon Search
http://ageconsearch.umn.edu
aesearch@umn.edu

*Papers downloaded from **AgEcon Search** may be used for non-commercial purposes and personal study only. No other use, including posting to another Internet site, is permitted without permission from the copyright owner (not AgEcon Search), or as allowed under the provisions of Fair Use, U.S. Copyright Act, Title 17 U.S.C.*

CANADA

6/91

Agriculture Canada

Policy Branch

Direction générale des politiques

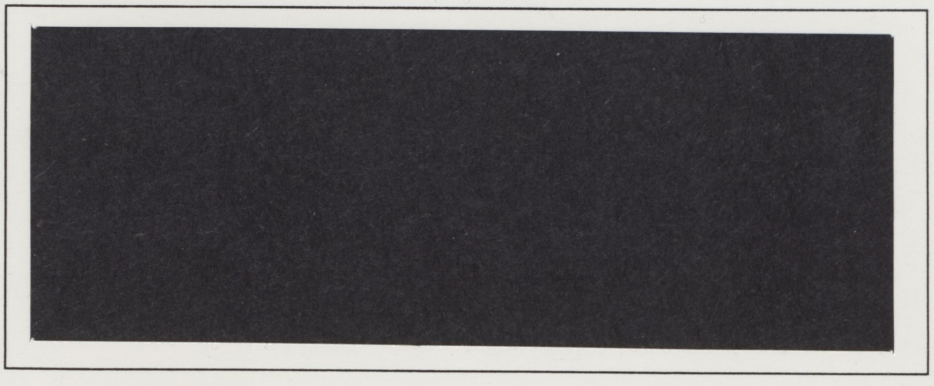

GIANNINI FOUNDATION OF AGRICULTURAL ECONOMICS LIBRARY
WITHDRAWN
APR 18 1991

WORKING PAPER

Canada

Working papers are (1) interim reports completed by the staff of the Policy Branch, and (2) research reports completed under contract. The former reports have received limited review, and are circulated in the language of preparation for discussion and comment. Views expressed in these papers are those of the author(s) and do not necessarily represent those of Agriculture Canada.

A REVIEW OF STUDIES ON WESTERN CANADIAN GRAIN TRANSPORTATION POLICIES

(Working Paper 6/91)

W.A. Kerr[1], G. Fox[2], J.E. Hobbs[1], K.K. Klein[3]

[1] Department of Economics, The University of Calgary, Calgary, Alberta.
[2] Department of Agricultural Economics and Business, University of Guelph, Guelph, Ontario.
[3] Department of Economics, University of Lethbridge, Lethbridge, Alberta.

March 1991

This report was completed under contract with the Policy and Grains and Oilseeds Branches, Agriculture Canada, 1991.

PREFACE

This document was prepared as part of a study commissioned by Agriculture Canada following the federal government's Growing Together Conference, held in Ottawa in December, 1989. The purpose of the study was to estimate the economic impact on Canadian agriculture and related industries of various options for change in the Western Grain Transportation Act.

An Advisory Committee of Douglas D. Hedley, H. Bruce Huff, Zuhair A. Hassan, Jeff Corman, James Atcheson, Malcolm Cairns, Bruce Kirk, Roger Eyvindson, Brian Paddock, Elizabeth Riach, Howard Migie, Richard Barichello and Robert Romaine helped set the bounds for the study.

This document reviews previous studies and provides comparison with the results of the current study, at least to the extent that is possible given divergent natures and time frames of the various studies. Other reports prepared as part of the study were:

1) Klein, K.K., G. Fox, W.A. Kerr, S.N. Kulshreshtha, and B. Stennes, 1991, Regional Implications of Compensatory Freight Rates for Prairie Grains and Oilseeds. Working Paper 3/91, Policy Branch and Grains and Oilseeds Branch, Agriculture Canada, Ottawa.

2) Klein, K.K., G. Fox, W.A. Kerr, S.N. Kulshreshtha, and B. Stennes, 1991, Summary of Regional Impacts of Compensatory Freight Rates for Prairie Grain. Working Paper 4/91, Policy Branch and Grains and Oilseeds Branch, Agriculture Canada, Ottawa.

TABLE OF CONTENTS

		Page
1.	Introduction	1
	1.1 Background	1
	1.2 Objectives	2
	1.3 Scope	2
2.	History of Government Regulation of Grain Freight Rates in Canada	3
3.	Analytical Issues Pertaining to the Study of the Grain Handling and Transportation System	10
	3.1 Analytical Approaches	11
	3.2 Elasticities	18
	3.3 Dynamics of Herd Size Adjustment	20
	3.4 Regional Feeder Cattle Market Linkages	20
	3.5 Consumer and Taxpayer Effects	21
4.	Review of Studies	22
	4.1 Studies Undertaken with the Statutory Rates in Place	22
	4.2 Studies of Proposed Changes to the Statutory Rates	31
	4.3 Studies Evaluating the WGTA	35
	4.4 Studies Evaluating Changes to the WGTA Assuming Relatively High Grain Prices	38
	4.5 Studies Evaluating Changes to the WGTA Assuming Relatively Low Grain Prices	43
5.	Conclusions	53
REFERENCES		58
APPENDIX 1:	Farm Organizations Contacted Regarding WGTA Study	64
APPENDIX 2:	Organizations Which Responded to the Letter Regarding the WGTA Study	68
APPENDIX 3:	Response of Farm Groups Contacted Regarding WGTA Study	70

1.2 Objectives

There were two major objectives: (1) to classify previously published studies into categories that are meaningful to a policy analyst; and (2) to examine previously published studies to determine their value for a general public policy review of the grain transportation system in Canada. The former was developed along analytical classifications although the taxonomy was sufficiently broad to indicate differences in both the extent of geographic coverage and the products examined.

1.3 Scope

While the western grain transportation system has been the subject of study since its inception this review covers work undertaken between 1975 to 1990. There are a number of reasons why the review was limited to this period. In 1975, in response to claims by the railways that there was a serious shortfall in revenues received for shipping grain and the obvious deterioration in the ability of the system to move grain to the ports, two Commissions were appointed. The major contribution of the Hall Commission was to catalogue the deterioration of the system while that of the Snavely Commission was the provision of estimates of the revenue shortfall. This formal evidence provided both the incentive for change and the empirical information upon which to evaluate changes. The first serious proposals to make significant changes to the regulatory regime followed soon after. Further, estimates arising from studies done prior to 1975 were expected to be of limited usefulness due to the subsequent period of sustained inflation. Finally, changing rail and grain handling technology, new crops such as canola and a shift in

emphasis to West Coast based markets suggested that the results of pre-1975 studies would have been invalidated by the march of events.

Particular care was taken to ensure that the studies reviewed encompassed the widest possible geographic area as the effects of any change to the grain handling system might have ramifications for all parts of Canada, and not simply the prairie provinces. These effects are important for a Canadian public policy review. In addition, a large number of farm groups and other interested parties were contacted to ensure that no major research efforts in the private sector had been overlooked and that their major concerns had not been excluded from the quantitative analysis of which this report is a part.

2. History of Government Regulation of Grain Freight Rates in Canada

On September 6th, 1897, the Dominion of Canada signed a contract, known as the Crowsnest Pass Agreement, with the Canadian Pacific Railway (CPR). In exchange for a subsidy of $3.4 million to build a rail line from Lethbridge, Alberta through the Crowsnest Pass to Nelson, British Columbia, the CPR agreed to haul export grains to the Lakehead - now Thunder Bay - at reduced freight rates. The CPR agreed that these rates be fixed in perpetuity. These rates, over time, came to be known as the Crow Rates. The Railway Act of 1925 made the rates statutory - hence the term Statutory Rates. The Act extended the Crow Rates to apply to both the CPR and the Canadian National Railway (CNR) for transport of export grains and flour moving through three Western ports - Vancouver, Prince Rupert and Churchill - as well as all grains and flour moving to Thunder Bay.

Except for minor adjustments, the Crow Rates remained at their nominal - uncorrected for inflation - 1897 level until the 1980's. Over the years, particularly in the late 1970's, the Statutory Rates were extended to cover more than fifty commodities ranging from wheat to sunflower seed oil.

Due to post-war inflation, nominal freight costs today differ considerably from those in 1897. By 1981 it was estimated that shippers of statutory grains paid only about twenty percent of the costs of moving grain. Projections showed that this could fall to as low as ten percent by 1990 if the old Crow Rates had remained in effect. The federal government agreed to pay a part of the "Crow gap" - the difference between compensatory and statutory freight rates - while the railroads absorbed the portion of the "Crow gap" not covered by the federal government.

Due to the losses that they were sustaining when transporting grains at the Crow Rate, the railroads had little incentive to replace or maintain the grain transportation network. As the transportation system for grain deteriorated, reductions in the railroads' ability to deliver grain to export position could have severely damaged Canada's reputation as a reliable grain exporting nation. The expected results were lost grain sales, additional on-farm storage costs and outdated technology. During the 1970's it was estimated that as much as $1 billion in grain export sales were either lost or deferred because of the inadequate transportation capacity of the railroads. In 1978-79 on-farm storage costs for wheat alone were estimated at $100 million.

While it was not the sole policy responsible, the widening gap between the full cost of transporting grains to terminal positions and

the cost paid by farmers contributed to a number of distortions in the market signals received by those involved in prairie agriculture. Artificially low freight rates translated into artificially high grain prices at the farm level. Since world grain prices are virtually independent of small production changes in the prairie region of Canada, farm level grain prices within the Wheat Board area are high relative to their level had freight rates more closely reflected actual transportation costs. The Crow Rates have meant higher farmgate grain prices in western Canada but have had no such effect on grain prices in central and eastern Canada, since in these regions feed grain policies have been mostly determined by the import prices for corn and wheat prices have been independently negotiated by the Ontario Wheat Producers' Marketing Board. The Thunder Bay price of grain, of course, reflects the world price and, hence, effectively determined the price of western grain in central Canada allowing for the cost of transport.

Cattle and hog production in western Canada has been reduced by the effect of the Crow Rates on feed-grains. As nearly two-thirds of prairie grain production is sold to markets outside the prairies, the local market is basically a residual or price taking market. Due to competitive forces, the prices of Crow grains sold locally reflect the farmgate prices of grain sold for export. The western livestock industry has had to pay higher prices for feed than would have been the case if grain producers were charged the full cost for transporting their grain to export markets. The effect has been to reduce beef and pork production in western Canada. During the 1970s and early 1980s a substantial change occurred in the location of livestock production in Canada. The prairie provinces had traditionally been large net exporters

of hogs and pork products while the remaining provinces have been net importers. During the mid-1970s, the prairie surplus in hog products fell dramatically while Ontario and especially Quebec increased production relative to consumption so that these provinces became surplus pork producers in the 1970's and 1980's. Since 1985, when the Government of Alberta instituted a Crow Offset Subsidy (a subsidy to feed grain users that was designed to compensate them for the higher farm level prices for feed grains), Alberta production of hogs and beef has increased.

Relatively higher grain prices also had an impact on secondary agricultural processing industries in western Canada. Canola crushing and feed processing firms all had to pay higher prices for their oilseed and grain inputs. This provides an incentive to locate processing plants closer to centres of consumption which are, for the most part, situated outside the prairie region and in many cases outside Canada. In addition, meat processing and associated activities followed the eastward shift of livestock production in the 1970s and early 1980s.

These, and other distortions, were recognised as serious problems by the federal government. In 1982, the Minister of Transport indicated that the federal government no longer felt obliged to: (1) make payments at a level higher than the 1981-82 level of subsidy to the railroads; and (2) make payments in the manner that had prevailed during the past 85 years. Dr. J.C. Gilson was commissioned to determine a way to implement a new freight rate structure. After Dr. Gilson made his report, on February 1, 1983 the federal government put forward a set of transportation proposals.

Gilson selected the 1981-82 crop year as a base year and 30.4 million tonnes as a reference point for statutory grain shipments. The difference between the revenue earned on moving this amount of grain at the Crow Rates and the total cost involved in transportation was called the Gross Railway Revenue Shortfall. Gilson recommended that western farmers should forever receive a subsidy equal to this value - later set at about $658 million annually. This would be known as the Crow Benefit. The federal government would also pay some portion of increased transportation costs beyond the 1981-82 level. The grain producer would pay the remaining portion of increased costs. Gilson proposed that payments be made on an acreage basis. This meant that the benefits would be shared by those who grew non-statutory grain.

The method of payment proposed by Gilson was a compromise between paying the full amount of the subsidy to the railroads and paying the full amount to the producers. It was recommended that by 1989-90 the proportion of the Crow Benefit paid directly to the producer should be 81 percent with the remaining nineteen percent being paid directly to the railroads. The reasoning underlying this proposed division of the subsidy was that by giving 81 percent of the payment to producers, most of the distortions to grain prices caused by the Crow Rate would be removed. The nineteen percent given to the railroads would be a leverage device to ensure that the railroads fulfilled their obligation to improve the transportation system.

Following the release of the Gilson report, two major Western farm organisations issued policy statements on the proposed resolution of the Crow issue. There was general agreement on some of the proposals, but as a reflection of the degree of controversy, they could not agree on the

central issues. The Western Agricultural Conference (WAC) and the Prairie Farm Commodity Coalition (PFCC) disagreed on the fundamental issue of the method of compensating the railroads and of retaining the Crow Benefit for grain producers. The Western Agricultural Conference (representing the three prairie Wheat Pools, the Manitoba Farm Bureau, the Saskatchewan Federation of Agriculture and Alberta's Unifarm) proposed that the subsidy be paid directly to the railroads and that the old Crow Rates be retained and paid by grain producers. They did, however, suggest that future levels of the subsidy be negotiable and that producers could share in future cost increases. The Prairie Farm Commodity Coalition (representing organizations that consisted either of western livestock interests or those directly connected in the production chain to western livestock producers - feed suppliers, packing plants, etc.) made the argument that producers should pay the railroads the entire costs of moving grain and the grain producer would then be compensated through acreage payments by the federal government. These opposing positions on this major policy issue reflected the origins and views of their respective supporters. Organisations in the WAC are mainly grain growing interest groups and would therefore support retention of the benefits conferred to grain producers by the Statutory Rates. They also worried that political support for payments made directly to farmers might wane in future years and farmers might not end up receiving the full amount of the subsidy in perpetuity. The PFCC would be in favour of farmers receiving the subsidy since the resulting fall in grain prices would lower feed grain costs and aid in the resurgence of the livestock industry in western Canada.

Most farm groups in central Canada supported paying the railroads in perpetuity at the level of the 1981-82 Gross Railway Revenue Shortfall. These groups took this stand because they believed this would protect their own livestock industry. It was believed that the maintenance of high prices for Crow grains would discourage cattle finishing in western Canada and, hence, facilitate the growth of the central Canadian livestock industry. The results of Klein et al. (1991) suggest that such effects are very small.

In November 1983, the Canadian Parliament passed the Western Grain Transportation Act (WGTA) which replaced the fixed statutory freight rates on grain with rates that were meant to reflect changing costs of grain transportation. The main features of the Act were: (1) that the federal government would pay, on a continuing basis, a Crow Benefit of $658 to the railroads; (2) grain producers would pay inflation capped increases in rail transportation costs; (3) payments were limited to shipments of 30.4 million tonnes or less. A provision of the Act was a review to be held in 1984-85 to examine the method of paying the Crow Benefit.

Since the passage of the WGTA there have been no major changes to the regulation of the grain transportation system. However, the Crow Benefit (about $720 million in 1989-90) now accounts for about 70% of total grain transportation costs. Producers pay directly about 30% of grain transport costs. The position of grain farmers in Western Canada has, however, changed dramatically due to declining world prices, drought and the receipt of large transfers from the federal government. This changing situation has led to a major policy review of the support system in place to aid prairie farmers, including the WGTA.

3. Analytical Issues Pertaining to the Study of the Grain Handling and Transportation System

Given the problems created by the Crow Rates and the substantial changes which have been legislated over the last two decades, it is probably not surprising that few issues have been more studied than the movement of grain produced in western Canada. The transportation system which moves grain in Western Canada is heavily regulated from the farmgate until control of the product passes either to international carriers or domestic end users. Regulations apply to every aspect of movement from load limits on farm trucks to grain handling at elevators, rail car allocation, transportation rate setting, and scheduling of international carriers. As regulations determine the procedures followed by the various economic actors engaged in the complex and interdependent processes which comprise the grain handling and transportation system, questions arise as to the effect of the regulations on system efficiency and the incomes of the participants. When it is a group of participants asking the research questions, the emphasis tends to be narrowly focused. Of course, as research is not a costless activity, one would expect that those expending resources for research would use their limited resources to maximise information on aspects of the regulatory system which affect them most directly. For similar reasons, provincial governments and some federal departments initiate narrowly focused studies. The grain handling and transportation system must be treated as an integrated system in any public policy decisions; therefore, narrowly focused studies are likely to be of only limited use in the public policy process. It is probably not surprising then, that attempting to draw on existing studies for a major policy review fails to provide sufficient information for effective decision making. This, of course, leaves aside

all of the problems which different analytical techniques and assumptions, plus the march of events, create for the comparison of results across studies.

Economic studies can have two aspects: (1) a theoretical component with qualitative predictions; and (2) empirical estimates. Almost all studies on the western grain transportation system have the former while only a few have the latter. The theoretical-qualitative models, whether empirically validated or not, have been concerned with deriving directional predictions (e.g., an increase in cattle feeding activity) based on economic logic. In the studies examined for this report, there were no discernible differences across studies regarding the directional predictions arising from major potential changes to the regulatory system. This was encouraging as there seemed to be a consensus on the basic underlying structure of the grain handling and transportation system (GHTS) and the economic forces which affect it. Unfortunately, a similar degree of consensus regarding the magnitudes of the directional predictions has not yet emerged in the empirical work. Given the diverse nature of the research sponsors, analytical techniques, assumptions and empirical results exhibited by the studies examined for this project, a brief taxonomy of possible research approaches will be useful.

3.1 Analytical Approaches

Since that the GHTS must be approached as a system for public policy assessments, conceptually the most useful information would come from a "Disaggregated Dynamic General Equilibrium" (DDGE) model. Disaggregation is important because it allows an assessment of the

effects of proposed changes to the regulatory system for all of the various economic actors concerned with the GHTS. Disaggregation by crops and livestock products, by end users, by input suppliers and by transportation mode are obvious categories. In addition, further disaggregation of these categories by units of political decision making (at least to the provincial level) are also desirable.

Having a dynamic model is important because the process of adjustment to any policy change is not instantaneous but rather, entails paths of adjustment for all of the participants in the GHTS. The ability of participants to adjust to any policy change may be as important as the benefits which are eventually expected to arise from that change. A general equilibrium model is desirable because, in systems like the GHTS, interaction of impacts among various components can have synergistic effects.

Unfortunately, the development of large scale DDGE models is hampered by the complexity of the system to be modeled with available, scarce, research resources. As a result, much economic analysis is undertaken with models which sacrifice one or more of the characteristics of DDGE models. General Equilibrium Models tend to be highly aggregated - Aggregated Dynamic General Equilibrium Models (ADGE) - and, hence, do not provide much detail for the decision making process. Dynamic models may be continuously dynamic or iterative. Iterative adjustments are often sufficient to provide the insights required by policy makers regarding paths of adjustment. At the most basic level, dynamic adjustments are treated as linear and non-interactive among participants. Such models might be called Disaggregated Linear Dynamic General Equilibrium Models (DLDGE). More often, however, the complexities

associated with modeling paths of adjustment is foregone and analysis is conducted within a comparative statics framework.

Comparative statics compares two hypothesised equilibriuma. This comparison can be conducted within a Disaggregated General Equilibrium framework - Disaggregated Comparative Statics General Equilibrium (DCSGE) or models can retain their dynamic or linear dynamic character but forego the general equilibrium approach for partial equilibrium analysis. Such models can be partial equilibrium by commodity (i.e., they do not include all major commodities), or spatially (i.e., they include only a subset of geographic areas such as western Canada but not central Canada), or both. These models will be denoted respectively: (1) Dynamic Partial Equilibrium by Commodity (DPEC); (2) Linear Dynamic Partial Equilibrium by Commodity (LDPEC); (3) Dynamic Partial Equilibrium Spatially (DPES); (4) Linear Dynamic Partial Equilibrium Spatially (LDPES); (5) Dynamic Partial Equilibrium by Commodity and Spatially (DPECS); and (6) Linear Dynamic Partial Equilibrium by Commodity and Spatially (LDPECS).

Finally, there is a set of models which forego both dynamics and general equilibrium. They are Comparative Static Partial Equilibrium models which again can be divided by whether they are Commodity Partial Equilibrium, Spatially Partial Equilibrium or both. Formally, they can be denoted: (1) Comparative Static Partial Equilibrium by Commodity (CSPEC); (2) Comparative Static Partial Equilibrium Spatially (CSPES); and (3) Comparative Static Partial Equilibrium by Commodity and Spatially (CSPECS). The majority of the models investigated for this project fall into the latter three categories and, hence, are of limited usefulness for a general policy assessment. As the various studies are discussed

below the analytical approach used will be identified according to the taxonomy developed above. While these are admittedly crude divisions and some studies cannot be easily "pigeon holed," it does provide a quick reference point as to the likely strengths and weaknesses of the studies assessed. The various analytical approaches are summarised in Table 1 below.

The analytical approaches used to study the GHTS and their likely usefulness to a major policy review are illustrated in Figure 1. While any cataloging of studies must be somewhat arbitrary, a general indication of the likely available information can be provided by such a procedure. A summary of the studies investigated in this paper is provided in Table 2. In addition, the approach used in individual studies is indicated at the end of each citation in the bibliography.

As can be seen from Table 2, the majority of the studies on the GHTS fall into the categories which are of limited use for a general policy review. Most of the studies are either Linear Dynamic or Comparative Static and Partial Equilibrium in nature. This immediately suggests that a major research effort is required to provide sufficient information for a serious policy review.

Beyond these broad issues of analytical approach there are certain recurrent themes related to the structure of models used to study changes in western Canadian grain transportation policy which are deserving of emphasis in the present context. As well as the structure of the models used for policy analysis, the protocol used to compute estimates of key parameters play a critical role in determining the outcome of the exercise. Four important concerns need to be addressed in the development of the model in the current study: elasticities, dynamics of

Table 1

Summary of Analytical Approaches

Abbreviation		Description	Major Weaknesses
1.	DDGE	Disaggregated Dynamic General Equilibrium	Expense and data requirements
2.	ADGE	Aggregated Dynamic General Equilibrium	Lack of sufficient detail for complete analysis
3.	DLDGE	Disaggregated Linear Dynamic General Equilibrium	Paths of adjustment unrealistic
4.	DCSGE	Disaggregated Comparative Static General Equilibrium	No paths of adjustment
5.	DPEC	Dynamic Partial Equilibrium by Commodity	Lack of interactive information for all commodities
6.	LDPEC	Linear Dynamic Partial Equilibrium by Commodity	Paths of adjustment unrealistic and lack of interactive information for all commodities
7.	DPES	Dynamic Partial Equilibrium Spatially	Lack of interactive information for all geographic regions
8.	LDPES	Linear Dynamic Partial Equilibrium Spatially	Paths of adjustment unrealistic and lack of interactive information for all geographic regions
9.	DPECS	Dynamic Partial Equilibrium by Commodity and Spatially	Lack of interactive information for all commodities and all geographic regions
10.	LDPECS	Linear Dynamic Partial Equilibrium by Commodity and Spatially	Paths of adjustment unrealistic and lack of interactive information for all commodities and all geographic regions
11.	CSPEC	Comparative Static Partial Equilibrium by Commodity	No information on paths of adjustment and lack of interactive information for all commodities
12.	CSPES	Comparative Static Partial Equilibrium Spatially	No information on paths of adjustment and lack of interactive information for all geographic areas
13.	CSPECS	Comparative Static Partial Equilibrium by Commodity and Spatially	No information on paths of adjustment and lack of interactive information for all commodities and all geographic areas

FIGURE 1

METHODOLOGIES USED TO STUDY THE GHTS AND THEIR USEFULLNESS FOR A MAJOR POLICY REVIEW

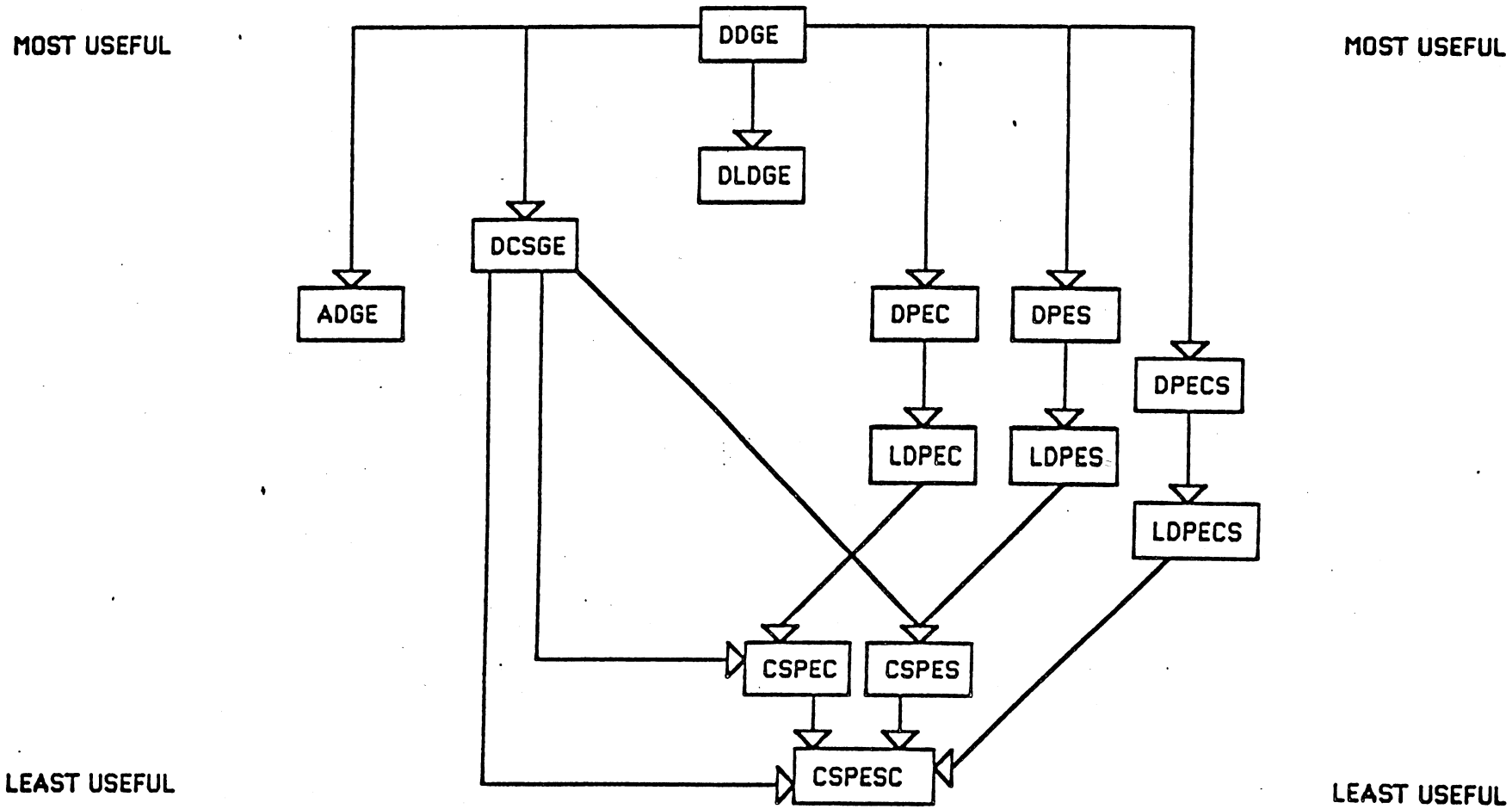

KEY

DDGE - DISAGGREGATED DYNAMIC GENERAL EQUILIBRIUM
ADGE - AGGREGATED DYNAMIC GENERAL EQUILIBRIUM
DLDGE - DISAGGREGATED LINEAR DYNAMIC GENERAL EQUILIBRIUM
DCSGE - DISAGGREGATED COMPARATIVE STATIC GENERAL EQUILIBRIUM
DPEC - DYNAMIC PARTIAL EQUILIBRIUM BY COMMODITY
LDPEC - LINEAR DYNAMIC PARTIAL EQUILIBRIUM BY COMMODITY
DPES - DYNAMIC PARTIAL EQUILIBRIUM SPATIALLY
LDPES - LINEAR DYNAMIC PARTIAL EQUILIBRIUM SPATIALLY
DPECS - DYNAMIC PARTIAL EQUILIBRIUM BY COMMODITY AND SPATIALLY
LDPECS - LINEAR DYNAMIC PARTIAL EQUILIBRIUM BY COMMODITY AND SPATIALLY
CSPEC - COMPARATIVE STATIC PARTIAL EQUILIBRIUM BY COMMODITY
CSPES - COMPARATIVE STATIC PARTIAL EQUILIBRIUM SPATIALLY
CSPECS - COMPARATIVE STATIC PARTIAL EQUILIBRIUM BY COMMODITY AND SPATIALLY

Table 2

Number of Studies by Analytical Approach

Methodology	Number of Studies
DDGE	0
DLDGE	6
DCSGE	2
ADGE	1
DPEC	0
DPES	1
DPECS	0
LDPEC	0
LDPES	2
LDPECS	1
CSPEC	2
CSPES	8
CSPESC	10
TOTAL	33

herd size adjustment, regional feeder cattle linkages and consumer and taxpayer effects. These concerns are explained in detail in the following four sections.

3.2 Elasticities

Various demand and supply elasticities for grains and livestock turn out to be critical determinants of the size and the incidence of effects arising from changes in the Crow Benefit. Consistency, the selection of particular values and estimation procedures are all important issues that have not received adequate emphasis.

Consistency relates to two specific concerns. First, it is not at all clear that previous models of grain supply have incorporated restrictions on own and cross-price elasticities suggested by the homogeneity and symmetry conditions for supply functions. Cross-price effects for grains in the prairies could be significantly influenced if differential price effects for different grains occur as a result of changes in the method of payment of the Crow Benefit. Interpretation of the projected output effects for western Canadian grains is difficult if the underlying system of supply functions is not theoretically consistent. A second consistency concern relates to the selective use of the small country assumption. For example, some studies have assumed that fluctuations in Canadian barley exports have no effect on world barley or feedgrain prices but it has frequently been assumed that changes in western Canadian hog and cattle production do influence North American pork and beef prices. However, western Canada's share of North American markets for red meats is smaller than Canada's share of world barley trade although Canada's share of the world feed grain market is,

indeed, very small. More care needs to be taken in the specification of how fluctuations in regional Canadian production affect prices.

Selection of particular values for relevant elasticities have been made on an ad hoc basis. Generally, most analysts have used relatively small values for the own-price elasticities of supply for both grains and livestock. In the case of grains in western Canada, this leads to modest projections of the output (and indirectly price) effects of changes in the effective prices received by farmers. Given the magnitudes of the farmgate price movements involved under a regime of compensatory freight rates, these small output effects are difficult to accept. They would seem to seriously understate the possible extent of abandonment of marginally profitable farmland and the adjustment to less intensive use of purchased inputs and, hence, lower yields on land that remains in production. On the other hand, selected studies have used very large values for the elasticities of livestock supply with respect to changes in feedgrain prices.

Estimation of appropriate values for elasticities, where time series data are the most available source of information, poses serious problems. Supply functions estimated with historical data describe output adjustments to periodic fluctuations in input and output prices. Until very recently these fluctuations have been small relative to the effects of compensatory freight rates on farmgate prices, and both price decreases and increases have been observed. Changes in freight rates associated with changes in the size or method of payment of the WGTA subsidy constitutes a new policy regime. As Lucas (1976) has made quite clear, parameter estimates obtained under one policy regime are likely to be of little value for policy analysis under another regime.

3.3 Dynamics of Herd Size Adjustment

Most of the models that have been used to study changes in the Crow Rates have been annual or quarterly. Herd size adjustments to input and output price changes take place over protracted time periods. It is the long-run supply consequences for western and eastern Canadian livestock sectors that are of interest in the present context. It is necessary to characterise the intertemporal adjustment to desired herd sizes and output levels under different transportation policy regimes if useful quantitative predictions are to be made. This is required to capture the heifer retention and breeding decisions in each region as producers respond to changing feed and product prices.

3.4 Regional Feeder Cattle Market Linkages

Most analysts agree that changes in freight rates will have a considerable effect on the comparative advantage in livestock feeding within North America. In particular, the supply of western feeder cattle to central Canada is expected to decline if farm-gate prices for feed grains in western Canada decline. Of course, provincial programs aimed at western feeder retention will have already mitigated some of this effect. These regional linkages, however, have not generally been modelled explicitly and the price, output and farm income effects of changing trade patterns in feeder cattle have not been rigorously explored. As a result, it has been difficult to interpret the farm income effects that have been reported for the cattle industry in central Canada.

3.5 Consumer and Taxpayer Effects

Most studies which have assessed the impact of changes in western grain transportation policy have not emphasised the gains to consumers from lower product prices. In a general public policy review these effects, as well as the effects of lower treasury costs as a result of reduced transportation subsidies, need to be evaluated and presented on a comparable basis to form expectations about the revenue and income effects which tend to dominate discussion on this topic.

Apart from the choice of analytical approaches used, the other major limitation of existing studies of the GHTS is that their results have been overtaken by the march of events. The most significant of these events have been: (1) the change from "Statutory Rates" to the Crow Benefit subsidies of the WGTA and along with it the method of paying the subsidy; and (2) the change from a booming prairie agricultural economy in the 1970's to a depressed economy in the late 1980's, primarily as the result of exogenous international trade problems.

To ensure that the review of studies relating to the GHTS was as comprehensive as possible, a large number of farm organisations were contacted (a complete list can be found in Appendix 1) to identify any "in house" studies which may have been conducted but are not in the public domain. The organisations were also asked to comment on any aspects of GHTS research they felt would be relevant. A complete list of the respondents can be found in Appendix 2. A brief summary of the results of the survey is presented in Appendix 3.

In general, the review of studies of the GHTS will follow a chronological ordering within five general time progressing headings: (1) studies undertaken with the Statutory Rates in place; (2) studies of

proposed changes to the Statutory Rates; (3) studies evaluating the WGTA; (4) studies evaluating changes to the WGTA assuming relatively high grain prices; and (5) studies evaluating the changes to the WGTA assuming relatively low grain prices.

Certainly, there have been many other changes to the environment within which the GHTS must operate; as far as possible they will be alluded to in the review process. The divisions above, however, represent the major changes to the approach of studies evaluating the GHTS and indeed the incentives for carrying out the studies. In general, older studies receive less attention in this review, while newer studies are examined in considerable detail.

4. Review of Studies

4.1 Studies Undertaken with the Statutory Rates in Place

While the point in time to begin any review of studies concerning the GHTS must be somewhat arbitrary, it would seem logical to begin the examination with the studies which led up to the change from the Statutory Rates to the WGTA. Early studies emphasised documentation of the concerns raised by the railways who felt they were receiving insufficient revenues under the Statutory Rates. Furthermore, the commensurate lack of investment in the GHTS and the system's very obvious deterioration prompted several studies.

In response to grain industry and railway concerns, the federal government established two commissions in 1975. The Hall Commission (HCR, 1977), while it dealt with the issue of Statutory Rates, was primarily concerned with the branch line system. It did, however, have

one major recommendation regarding the Statutory Rates. According to Abouchar (1977):

> The Hall Commission Report recommends that the statutory rates (Crowsnest Pass Rates) be retained, and that any difference between the revenue generated by the statutory rates and the cost of transporting grain be paid directly to the railways by the federal government. (p. 27)

This represents the earliest expression of what has become known as the "Pay the Railway" (PTR) option. The Hall Commission showed that the state of the GHTS was such that a major change in grain transportation policy was warranted.

The Snavely Commission (SCR, 1977) documented that the railways were experiencing a serious shortfall in revenue when transporting grain. In 1974 only 38 percent of the variable costs which could be attributed to the movement of grain were covered by the Statutory Rates while 24 percent was covered by federal branch line subsidies. This left a railway shortfall of 38 percent, which amounted to $89 million. These estimates were subsequently updated (Snavely, King and Associates, 1978). The costs of shipping grain in this study were apportioned as follows: Statutory Rates, 32 percent; federal subsidies, 18 percent; and railway shortfall, 50 percent. The realisation that a change in policy was required as well as the publication of these estimates, led to a flurry of research activity into the effects of the Statutory Rates.

The first of these was the study by Tyrchniewicz et al. (1978) (CSPES). This is one of the most sophisticated modeling exercises in all of the assessments of the GHTS system and illustrates the extreme complexity of the system from a modeling perspective. It should be noted that for all its modeling sophistication, the study falls into the CSPES category and hence, is of limited usefulness. The study used a spatial

partial equilibrium approach as it only examines the effect on Manitoba. It uses comparative statics to compare the Statutory Rates case with the farmers paying the full cost of transportation as calculated by Snavely for two representative years. Within Manitoba, however, it is an attempt at general equilibrium as a number of crop and livestock activities are included, as are links to other sectors. The Collection, Handling and Distribution model (CHAD) was used to estimate the effects on the GHTS. These results were then fed into a disaggregated linear programming model of the Manitoba economy to discern the effect on farmers. These results were, in turn, fed into a dynamic input-output model of a Manitoba sub-region to examine the regional impacts. Results were generated for small, medium and large farms and a number of crop, crop-livestock and livestock enterprise combinations. Tyrchniewicz et al. (1978) concluded that:

> The change in rail rates from the present statutory rates to compensatory rates (farmers paying 100 percent of 'Snavely' costs) would affect all farmers delivering grain to primary elevators. The increase in rail costs to farmers would be $17,672,000 under the 1973-74 scenario, and $12,666,000 under the 1970-71 scenario. In both instances the increase would be 13 cents per bushel. The effect on individual farmers would depend on the volume of grain deliveries. Under 1970-71 conditions, the average increase in rail costs to farmers (decrease in net farm income) would have been $410, with a range of $34 to $1,242. Under 1973-74 conditions, this average increase would have been $572, with a range of $47 to $1,726. (pp. 417-418)

While informative in its local detail, this study illustrates the inherent difficulty embodied in studies of the GHTS. Despite the considerable effort expended, it was not designed to provide any information about the adjustment process of farmers and the effect on other regions, particularly central Canada. The study is retrospective, as it compares counterfactual - or what if - results for past time

periods. Hence, there are no price expectations. The major advantage of the model used by Tyrchniewicz et al. (1978) is that it allows for realistic substitution among crop and livestock activities.

As suggested in section 3.2, there are three basic assumptions in almost all of the studies: (1) EXport price ELasticity is INFinite (hereafter EXELINF); (2) the Supply Elasticity of Prairie Grain production is close to zerO (hereafter PGSELO); and (3) Livestock Supplies are Very Responsive to Changes in Feed Costs (hereafter LSVRCFC). Tyrchniewicz et al. (1978) are constrained by the first assumption but not the second and third assumptions. A typical example of the latter is the MacEachern (1978) (CSPESC) study on the effect of the Statutory Rates on Alberta's livestock economy. Again, an historically based counterfactual argument is presented which implicitly assumes both EXELINF and PGSELO and states "It can be safely assumed that for a 1% increase in the relative cost of feeding livestock, that supply or production will eventually decline by at least 1%" (p. 27). Given these assumptions, the potential loss of retaining the Statutory Rates to the Alberta livestock industry was estimated at between $354 - $516 million and the loss to the Alberta economy from between $700 million and $1 billion per year.

The first of the three major studies by Harvey (1980) (LDPES) provides one of the few general equilibrium approaches, although it restricts its analysis to western Canada and, hence, is a spatially partial equilibrium approach. Straight line projections are made for the period 1977-1985 for a number of assumed changes to the cost of shipping grain relative to the Snavely estimates. Linear price projections are

also used. The analysis is carried out under assumptions of EXELINF and near PGSELO as:

> ...since the magnitude of the Crow Gap is probably not sufficient to drive net returns to zero, and since much of this land has little or no potential to grow anything other than grain, the supply response is likely to be slight. (p. 26)

As to livestock expansion, "short-run estimates (two to five years) suggest a 3 to 6 percent expansion for hog and beef production, while in the longer run (six to ten years) expansions in the order of 14 percent and 12 percent are not unlikely" (p. 26). These estimates were based on linear projections of Snavely costs.

The first Harvey study provides a comprehensive estimate of the likely effect of abandonment of grain subsidies under these assumptions. As this is one of the few studies which investigates the abandonment of the Statutory Rates without compensation, it is worth quoting the results at length:

> If the statutory rates are increased to at least cover the railway's variable costs, it is estimated ...that western Canadian agriculture would suffer an income loss on impact of between $225 and $300 million. This would be exactly offset by an increase in income to the railway and reduced expenditures by the Federal Government. It is estimated that grain and livestock production responses to this impact on income would, in time, reduce the loss in total agricultural income to between $104 million and $127 million per year, although the gain to railways and government would remain largely unchanged. The implications are that real final product from agriculture could increase by between $100 million and $130 million per year, and that there would be further gains in the value added by the secondary industry sector of perhaps $70 and $90 per year. In other words, if the grain rates are raised to a compensatory level, the western economy will experience a net increase in real income of well over $170 million per year. (pp. xi-xii)

These nominal values reflect 1980 prices and conditions. Nevertheless, the relative magnitudes may still be of interest for an abandonment case.

The second study by Harvey (1981) (LDPES) provides estimated declines in land prices. Based on an estimate of the implicit subsidy of $220 million per year capitalised over 20 years at 10 percent, the decline in land prices is estimated at $40 per acre if the Statutory Rates were abandoned, representing a capital loss of 18-22 percent on average. Estimates of the effect on land values are important because they will provide the ultimate adjustment to any major changes in net incomes and they may form the basis for any compensation offered to farmers in lieu of continuing transportation subsidies. Asset values are particularly important for borrowing and farmers' retirement. Given the EXELINF assumption, over the long run, while individual farm operators may not survive a fall in income, the productive asset (land), remains and will be retained in production. The only question is, at what price will that asset be employed? Unfortunately, few of the studies even attempt to address this issue. The estimates of the Crow Benefit as a percentage of crop value provided by Harvey (1981) are, at this point in time, of only limited usefulness as both the numerator and denominator in the calculations have been altered considerably. The numerator has been increased through growth in the "Crow Gap" (the difference between compensatory rates and the amount farmers pay to ship grain) while the denominator has declined due to the low grain prices of the late 1980's.

The final study by Harvey (1982) (DLDGE) investigated a number of abandonment options. The results suggest that there are considerable effects on income from pursuing a policy of staged abandonment. For example, in the case of grain, a decrease in income of $211 million ($1981) vs. $7 million for immediate abandonment and phased abandonment, respectively, suggest that phased abandonment should be considered explicitly in any policy review.

The Harvey studies also estimated the effects on central Canada. In the 1980 study, at the end of ten years, beef prices and steer and heifer slaughter in central Canada were projected to fall by 1.8 percent and 1.4 percent respectively. With adjustments to carcass size as a result of lower beef prices, total revenue from beef slaughter in central Canada was predicted to fall by 3 percent. Central Canadian hog prices were anticipated to fall by 1 percent with a 0.6 percent decline in production and a 1.6 percent decline in gross revenue. Measured as a present value in 1978, reduced beef sales over the ten year simulation amounted to $9 million and reduced sales of hogs were projected at $8 million. One scenario developed analysed a "Crow-Benefit" type of scenario in which the Statutory Rates were maintained, a payment to the railroads was made to offset their losses on grain transportation and western livestock producers received a feed subsidy to offset the higher feed costs generated by Crow Rates. Steer prices and steer and heifer slaughter in central Canada declined by 1.3 percent and 2.5 percent respectively. No specific results for the impact of this policy in the central Canadian hog sector are reported. In Harvey's (1982) update, simulations for 1980 to 1990 were conducted, comparing the effect of maintaining the Statutory Rates with freight rates based on 110 percent of the railway's variable costs of grain transport. An "immediate" and a "gradual" transition to non-Crow freight rates were studied. Under the gradual approach, the federal government paid 50% of the difference between Statutory Rates and compensatory rates. The Central Canadian results (Tables 3 and 4) are broadly comparable to those of the earlier study.

Table 3

Livestock Production Changes - Central Canada

	Beef Production '000 Head Steer and Heifer Slaughter		Hog Production Million lb. Chilled Trimmed Carcass	
Year	Base	Immediate Approach (change over base)	Base	Immediate Approach (change over base)
1975	759		775	
1976	841		685	
1977	1009		735	
1978	965		861	
1979	864		1077	
1980	942		1283	
1981	1161	0	1001	0
1982	1261	+2	967	0
1983	1187	+1	1021	- 2
1984	1244	-1	1028	- 3
1985	1148	-1	1021	- 3
1986	1043	-1	1045	- 3
1987	986	-2	1063	- 3.5
1988	1155	-3	1024	- 6.5
1989	1168	-4	1022	- 8.5
1990	1181	-5	1020	-12

Note: Projections of base production levels are derived from the base results of the beef and pork models run for the analysis reported in Harvey, 1980. These base levels are re-calibrated by adjusting model output levels to observed levels by the average percentage error over the period 1978-80. The final three years' output levels are estimated, since the previous model runs finished in 1987, by taking a linear trend through the base results and extrapolating to 1990.

Source: Harvey (1982).

Table 4

Long Run Income Effects in Central Canada
- $ Millions - 1981 Present Value

	Immediate Approach	Gradual Approach
Beef		
a) Reduction in Production: net of feed grain savings	- 1.1	0
b) Income Transfer from Producers to Consumers	- 9.6	-1.9
Sub Total	-10.7	-1.9
Hogs		
a) Reduction in Production: net of feed grain savings	- 5.0	0
b) Income Transfer from Producers to Consumers	-12.7	-2.1
Sub Total	-17.7	-2.1
TOTAL	-28.4	-4.0
as % of Base Total from Income to beef and hog producers	- 3.8%	-0.5%

Source: Harvey (1982).

The Hall and Snavely Commissions and the studies which followed them led to the Gilson consultative process and resulting report (Gilson, 1982). On February 8, 1982 the Federal Minister of Transport issued a statement on rail transportation which announced the government's intent to alter the Statutory Rates arrangement. The government position contained two elements: (1) that the government would assume the existing Crow Gap as a subsidy; and (2) that grain shippers should bear some of the burden of future increases in grain transportation rates. Dr. Clay Gilson of the University of Manitoba was appointed to lead a consultative process which would work out the specific details of a number of major issues, including how the subsidy should be paid and the proportion of future costs which grain shippers should pay. In brief, the major recommendations were: (1) that the federal government would commit to a subsidy equal to the 1981-1982 Crow Gap; (2) that the grain shippers would pay only an inflation capped proportion of any transportation cost increase, with the federal government paying the residual; (3) that initially the railways would directly receive the subsidies but by 1989-90 the grain producers should receive 81 percent; and (4) that grain shippers pay the full cost of any grain shipments in excess of 30.4 million tonnes. Of course, these recommendations brought forth additional studies.

4.2 Studies of Proposed Changes to the Statutory Rates

While too aggregated in approach to examine the specific Gilson recommendations, the Norrie and Percy (1983) (ADGE) article represents a serious attempt to analyse an increase in the rates paid to ship grain. By altering a number of elasticities and re-running the model they

suggested that GDP of the entire prairie region would decrease between 0.07 percent and 1.15 percent if farmers were required to assume the full transportation cost. Unfortunately, as agriculture is aggregated to one activity, the results cannot help address the intra-sectoral equity issues which surround the GHTS.

Kirk's (1983) (DCSGE) report for Agriculture Canada followed Harvey's comparative statics approach. Scenarios were projected for the 1990-91 crop year. In addition, a grain shipment capacity constraint was built into the analysis. Four policy options were examined in addition to retention of the Statutory Rates: (1) the Gilson recommendation; (2) the Gilson recommendation without the inflation cap; (3) pay the railway only the base year Crow Gap in perpetuity; and (4) a proposal which would have shared the subsidy between railways, grain producers and livestock producers. A number of other sub-scenarios were explored by varying assumed price/cost projections and other parameters. A complete taxonomy of the options considered is presented in Table 5.

The results suggested a range of outcomes; grain production increases between $2.2 and $2.7 billion and livestock increases between $700 million (policy E) and $1.1 billion (policy G). However, the study used higher inflation rates and prices than have actually occurred in the time since the study was completed. The lack of information on paths of adjustment also limits the usefulness of the study.

Kirk's projected effects on eastern Canadian hog and beef prices are reported in Table 6. Both the production and price effects are of the same order of magnitude as those reported by Harvey. The range of effects on the net revenues of farms in eastern Canada extends from about $10 million to $36 million per year.

Table 5

Policy Scenarios Considered in Kirk Study

AGRICULTURAL IMPACT SCENARIOS

Methods of Payment/Cost Sharing

	Gilson (G)	Alternative to Gilson (A)	Payment to Railways (E)	Pool Proposal (P)
Rail Costs I, II, III, and Types of Impacts Estimated	-as per Gilson Report.	-assumes Gilson up to 1985-86 but producers pick up all volume and inflation thereafter.	-1981-82 gross R.R. shortfall paid to R.R. and producers pay for all volume and inflation.	-assumes Gilson's cost sharing proposals.
I. Low Rail Costs -Real Final Product (RPA) Impact.	Impact (GI) and compensatory rate (CI) estimates measured from no Crow change base case.	None	None	None
II. High Rail Costs -Real Final Product (RFP) Impacts.	Impact (GI) and compensatory rate (CI) estimates measured from no Crow change base case.	None	None	None
III. Medium Rail Costs -Real Final Product (RFP) Impacts. -Farm Income Impacts.	Impact (GIII) and compensation rate (CIII) estimates measured from no Crow change base.	Impact (AIII) estimates measured from no Crow change base. Compensatory rate estimate = CIII.	Impact (EIII) estimates measured from no Crow change base. Compensatory rate estimate = CIII.	Impact (PIII) estimates measured from no Crow change base. Compensatory rate estimate = CIII.

Note: The compensatory rate estimates CI, CII and CIII indicate the maximum possible impacts from Crow change for the respective sets of low, high and medium rail cost assumptions. These estimates assume that producers pay the full compensatory rail rates, beginning in 1983-84 and for each subsequent year thereafter.

Table 6

Percentage Changes in Eastern Livestock Prices and Production by Policy Option in 1990-91

- % -

Policy Option	Hog Prices	Hog Production	Beef Prices	Beef Production
GIII	-0.87	-0.43	-1.07	-0.92
CIII	-1.35	-0.66	-1.90	-1.31
AIII	-0.87	-0.44	-1.08	-0.95
EIII	-0.54	-0.25	-0.63	-0.64
PIII	-1.05	-0.56	-1.58	-1.10

Source: Kirk (1983).

4.3 Studies Evaluating the WGTA

The federal government passed the Western Grain Transportation Act (WGTA) in 1983 (Tyrchniewicz, 1984). The key provisions of the Act are: (1) $659 million paid annually to the railway; (2) producers pay cost increases up to 3 percent, for the period 1984-1986 and up to 6 percent thereafter unless their transportation cost exceeds 10 percent of the price of grain; (3) subsidy is paid on a maximum of 31.5 million tonnes but can be reduced if volumes decline. In addition, the Act mandated an automatic review of the program. This provided the incentive for a plethora of studies.

Lerohl et al. (1984) (CSPES) examined a number of payment options under EXELINF, PGSELO and LSVRCFC assumptions for 1991-92. One option considered was an annuity. The estimated values for adjusted farm incomes in Alberta were $889 million for pay the railway, $1,130 million for pay the producer and $1,178 million for the annuity. No adjustment for increased railway efficiency was included. The estimates were based on high price forecasts and were restricted to Alberta, thus limiting the usefulness of the study.

Furniss (1984) (CSPESC) examined the effect on input industries. For Eastern Canada, farm machinery sales were estimated to decline by $5.6 - $12.2 million by 1995 as a result of lower levels of livestock revenue. This estimate is based on the historical relationship that annual machinery sales average about ten percent of farm gross revenue in Canada. Some specialised studies such as that by Davey and Kirk (1984) (CSPEC) on livestock and by Narayanan and Atcheson (1985) (CSPESC) on representative farms were undertaken. A study by Schweitzer (1984) (CSPEC) examined the WGTA changes within the general context of freight

rates between east and west and determined that transport issues were less important than in the past for the economy of western Canada. The results are of limited use for an examination of the agricultural sector. Other studies undertaken include Hollander's (1984) investigation of the effects of changes in the Crow Rate on the egg and poultry industry and Saint-Louis' (1984) study of the effects of the Crow changes in eastern feedgrain markets. Neither author anticipated major effects on eastern Canada.

Even in the early period of the WGTA, the question of whether the producer or the railway should be paid the subsidy became a major issue for research. One of the earliest and most extensive of these studies was the report prepared by Arcus Consulting Limited (1985) (CSPESC) for the Canadian Co-operative Wheat Producers. This study is important because it assumes EXELINF as only one demand elasticity option. The alternative export elasticity for grain used is -5.00; domestic feed grain elasticities are for wheat, -0.045; for barley, -4.259; and oats, -3.909. The supply elasticities for grain are assumed to be 0.5. The alternative to the pay the railway provisions of the WGTA used for the comparative static comparisons is similar to the Gilson proposal with 80 percent going to the producers and 20 percent being paid directly to the railway. Along with wheat, barley and oats, the effects on beef, chicken, hogs and grain elevator revenues are included in the analysis. Unfortunately, the usefulness of the study is constrained by its scope as it only considers western Canada and is limited in the range of commodities covered. It provides two "snapshots" for a projected 1986-87 crop year and those "snapshots" are based on optimistic price projections which do not reflect the reality of the 1986-87 crop year.

While the Arcus results are disaggregated, by crop and by province, the summary results reported suggest that the total benefit created for grain producers of having the subsidy go to the railway was $696.3 million; wheat, $435.4 million; barley, $165.5 million; and oats, $11.2 million. These gains are distributed as follows: Saskatchewan, $319.5 million; Alberta, $217.5 million; and Manitoba, $75.2 million.

Prices for hogs and cattle fell by 4.4 percent and 4.1 percent respectively, under a pay-the-producer option. The Arcus study assumed that there would be no output effect in eastern Canada from this price change. Under a closed border scenario, beef prices were predicted to fall by 10 percent and hog prices by 1.7 percent in eastern Canada. Again, no output effect was assumed.

Baldwin (1985) (LDPESC) used representative farms and an adding-up or accounting approach, assuming both historic and conservative rates for inflationary trends over the period 1981-82 to 1995-96 to determine:

> ...the historical and future magnitude of costs, as the typical prairie farmer perceives them, for trucking, elevator handling and rail transportation of grain destined for export. (p. 1)

Based on an estimate of a 28 percent increase in grain shipments over the period, the study estimated that in 1981-82 the average farmer could apportion the total cost of moving this grain to port as follows: 14 percent for trucking costs, 56 percent for elevation costs and 30 percent for rail shipment. If cost increased on a linear inflationary trend of 6.8 percent per year, then by 1995-96 this ratio would change to: 6 percent trucking, 28 percent elevation, 65 percent rail cost. With a 3.4 percent inflation rate, it was estimated to be: 7 percent trucking, 20 percent elevation, 73 percent rail.

A study of the effect of the Statutory Rates on the western Canadian feed grain market and implicitly, therefore, the WGTA changes, was undertaken by the Canadian Grains Council in 1985 (CSPESC). A counterfactual argument for the period 1974-75 to 1982-83 was presented. The study assumed EXELINF and PGSELO. The total cost of the implicit Crow subsidy to western feed users was estimated to be $424.4 million: wheat, $24.1 million; oats, $179.3 million; and barley, $220.9 million with Alberta's industry absorbing the lion's share at $247.5 million.

4.4 Studies Evaluating Changes to the WGTA Assuming Relatively High Grain Prices

With the approach of the legislatively mandated review of the WGTA method of payment slated for 1985 the research emphasis shifted. This heralded the "modern era" of GHTS study. Unfortunately, given the terms of reference for the mandated review, scenarios which included an abandonment option, whether phased or not, were infrequently analysed.

Some of the better research on the GHTS was done as a background to the report of the Committee of Inquiry on Crow Benefit Payment. The review, however, was ill-timed from a research point of view for two reasons. First, the WGTA's provisions had been operable for only a short time and, hence, as the cost to farmers had not increased significantly, resources were still largely used as they were when the Statutory Rates applied. In addition, the changes had not had time to have any significant effect on railway efficiency. Second, the price declines of the late 1980's were not yet manifest.

Of particular interest are a series of studies undertaken by Agriculture Canada as input to the Committee of Inquiry on the Crow Benefit Payment. The first of these was released in revised form in

January 1985 (Agriculture Canada, 1985a) (DLDGE). This report compiles the results of four reports using consistent analytical approach, two of which will be examined in detail in this discussion (Agriculture Canada, 1984) (DLDGE), (Agriculture Canada, 1985b) (DLDGE). The studies compared four policy alternatives with the existing WGTA provisions: (1) 50:50 - gradual increase in payments to producers until they are shared equally between producers and the railway; (2) phased in Gilson-producer compensation increasing from 33 to 81 percent, remainder to the railways; (3) 80:20 - immediate (no phase in) compensation for producers increased to 80 percent; (4) compensatory rates - all compensation paid to producers. Forecasts were obtained for production and sales by running simulations on Agriculture Canada's Food and Agricultural Regional Model (FARM). The model was run under assumptions of EXELINF and effectively PGSELO and LGLVRTP. The results for Western Canada can be summarised as follows: (1) beef production increases of 8 to 19 percent; (2) hog production increases of 7 to 14 percent, no significant change in total grain production; (3) some shifting of grains from exports to prairie region feed inputs.

Under the studies' projections, between 1983 and 1985 net farm income was forecast to increase by 45 percent from $1.9 billion and $2.7 billion under the WGTA system. These increase consistently under all the payment options: 50:50 - ten percent; Gilson - seventeen percent; 80:20 - eighteen percent; compensatory rates - twenty-one percent. The estimates of rail cost inflation - 5 percent per annum - triggered the safety net provisions each year from 1991-92 onward suggesting increased government expenditures. The main limitations of the forecasts for the current policy review is that wheat prices were projected to increase at

a rate of 4 percent per year and continued increases in output were assumed. Of course, these estimates do not take account of the deterioration of prices which followed the increase in European Community (EC) exports and the subsequent passage of the 1985 U.S. Farm Bill.

The report of the Committee of Inquiry into payment of the Crow Benefit, the so-called Hall Committee (HCR, 1985) (DLDGE), recommended that:

> Payments will be apportioned to individual producers on the basis of their net sales of eligible grains in each crop year, regardless of whether these grains are sold for export, for processing or for the feeding of livestock. There will be no minimum or maximum entitlement. Payments will vary to reflect rail freight charges in the rail freight zones of Western Canada. (p. 1)

The Committee used as the basis of its estimates the work provided to it by Agriculture Canada discussed above. While the Committee debated the assumptions underlying the Agriculture Canada models (particularly the magnitude of the livestock production response, p. 47, and the price projections, p. 48) they generally accepted them. The Committee also realised that their analysis failed to deal with a couple of fundamental issues. First, the capitalisation of benefit payments:

> If the Crow Benefit is paid to producers it becomes part of the income received and expected by producers. As such it acquires a value associated with the land from which income is derived, regardless of whether land is owned or rented. In other words, capitalisation of the Crow Benefit into farm land values is inevitable. The essential question is not whether this occurs but, if payments are made to producers, whether it would result in additional capitalisation and to what extent it would vary from capitalisation of the Crow Benefit under the current pay the railway policy. (p. 64)

The Committee had no recent estimates of the effect of capitalisation and in any case the depreciation of land values in the latter part of the 1980's would have reduced the usefulness of such estimates. The question, however, remains fundamental and has not yet

been adequately addressed. Second, the Committee also recognised that the subsidy could have international trade ramifications in any set of GATT negotiations which might finally have to deal with agricultural issues. Again the Committee had no answers. This issue also has not yet been adequately dealt with in subsequent analyses.

The Committee provided projections for the 1995-96 crop year. These were for its pay the producer option relative to the WGTA pay the railways method. The resulting estimates were: (1) no change in grain and oilseed production; (2) no change in grain sales revenues; (3) 2.4 percent decline in grain exports; (4) an increase of 14 percent in the value of western hog sales; (5) an increase in western beef production of 19 percent; and (6) a net increase in Canadian agricultural income.

The Hall Committee's recommendations regarding method of payment were assessed and criticised by the Grains Transportation Agency (1986) (CSPESC). The criticisms were for the most part centered on the technical difficulties associated with paying the producers. As a result, it recommended a "buy out" or annuity option. One of the important observations of the review was that:

> The safety net, as currently structured, would probably be triggered constantly in the future. Once the freight rate/grain price ratio reaches the 10 per cent trigger level, every $2 increase in freight rates will require a $20 annual increase in grain prices to avoid a continual triggering of the safety net. If grain price increases fail to materialise, freight rates actually paid by shippers would tend to flatten out. (p. 33)

Given the decline in grain prices experienced in the late 1980's, this issue has increased relevance but has not been dealt with adequately in subsequent studies. This is important because it has both resource distortion ramifications and budgetary implications for the government.

The review also broached for the first time the issue of productivity sharing with the railways. While no projections were provided there is a recognition that the disbursements of the Crow Benefit to the railways are provided so that the GHTS can be improved and modernised and that the associated benefits should not be captured by any one group. Unfortunately, the issues of railway performance and improvements to the efficiency of the GHTS which should arise from the disbursements have never been adequately dealt with.

Two papers which discuss increases in railway efficiency are those by Boyd (1986) and Craig (1986). Their discussion suggests that most of the gains in efficiency will come from technologically related improvements to the general rail system or from abandonment of additional lines. Neither of these would appear to be related to the WGTA payments to the railways. McQueen (1986) summarised the state of information regarding improvements to the rail transport aspects of the GHTS:

> When I started researching this matter for the CTC, I foolishly assumed that because there exists some quite good numbers relating to some aspects of modernisation, these could be put together with others to give some tentative but useful orders of magnitude. It could not be done. Above all, the interactive nature of the system defeated me. You cannot, for example, simply add estimates of branch line savings to estimates of unit train savings: they interact, overlap and make for serious double counting. Also, as you calculate the consequences of abandoning successive high cost branch lines, you must somehow allow for the way in which the resulting diversion of grain to alternative delivery points alters the cost profiles of the remaining lines. (p. 74)

A microeconomic farm level study by Schmitz and Rosaasen (1986) (CSPES) attempted to estimate the effect on intra-regional livestock production in western Canada as a result of switching from the WGTA payment to the railways to paying the producers directly. Since the existing method by which rail tariffs are set is largely a function of

distance, it is probably not surprising that reallocation of resources to livestock production will be greater the further the distance from grain export ports.

4.5 Studies Evaluating Changes to the WGTA Assuming Relatively Low Grain Prices

At this point the events of the late 1980's, particularly those associated with the export subsidy war between the EC and the U.S. and the resulting decline in prices are included (or should be included) in the assumptions of studies.

While not explicitly dealing with the WGTA, the study by MacGregor and Graham (1986) (DCSGE) used the CRAM model to provide estimates of the effects on grain producers of sustained lower prices. These could provide a basis for initialising data for future studies. Of particular importance are the estimates of the decline in farmland values arising from lower grain prices. In western Canada these declines are expected to range from 10 to 38 percent for the various prairie crop districts.

Partly as a reaction to the income crisis in the prairie grain economy, the Economic Council of Canada commissioned a major study on the "Future of the Prairie Grain Economy." Part of that larger study was a Council study by Fulton, Rosaasen and Schmitz (1988) (DPES). The study attempted to take a general equilibrium approach to the method of payment, although the effects on central Canada are not considered. The study's estimates are based, in part, on formal modeling, and in part, on casual empiricism. The effects on grains and oilseeds, livestock, farm income, income distribution, land prices and trade negotiations are estimated or discussed. These estimates assume EXELINF but have both short and long run supply elasticities for crops, plus livestock supply

elasticities with respect to feed grain prices (beef, short-run -0.32, long-run -0.96; hogs, short-run -0.12, long-run -0.36). The study takes a counterfactual approach providing alternative estimates for the period 1975-1987. Wheat and barley production were estimated to have been 6-7 percent lower under the WGTA system relative to paying the producer, while cattle and hog production would have increased 6 percent and 2 percent per year. They assume no cross price effects.

The study also notes that the value of the WGTA to farm incomes has increased from 25 to 30 percent of net farm income in 1980 to 40 percent in 1987 reflecting the decline in grain prices. Of course, this is an underestimate given that net farm income would have been negative in the absence of other major government programs such as Western Grains Stabilisation Program, Crop Insurance, the Special Canadian Grains Program and various product payments as well as the WGTA payments. This suggests another problem which has not been adequately dealt with in the literature. Any discussion of changes in method of payment or abandonment of the WGTA payments should be referenced to the financial position of prairie grain farmers. Grain farmers' incomes have, in recent years, been considerably supported by transfers from the federal government. These transfers have been directly or indirectly tied to grain prices. This means that even if grain prices recover, the income and asset position of farmers will not quickly improve as there will be an offsetting decrease in levels of support. The WGTA payments relate only indirectly to the price of grain through the safety net. Clearly, any income effects associated with the removal of the subsidy could be mitigated if the financial position of farmers had improved. Unfortunately, it will take a significant and sustained increase in grain

prices until that point is reached. This timing aspect of a change to the WGTA system has not been adequately addressed in existing studies. Of course, if grain prices remain at current levels indefinitely, land prices will adjust and the next generation of farmers will be financially viable.

In 1989 each of the prairie provinces had major studies of the method of payment undertaken either under the auspices of the provincial government or in the private sector. The most significant effort, however, was in Alberta. In August 1989, a study carried out on contract for Alberta Agriculture was released (Lerohl, Apedaile, Tyrchniewicz and Nakmura, 1989) (CSPESC). The study's intent was to focus on the "direct" effects of method of payment. It did not consider the effects of a changed rate structure in terms of full cost pricing of branch lines, variable/incentive rates, and shifts in pattern of rail/truck use. The direct effects of MOP (method of payment) change are changes in grain production and use. These were obtained from a model of the Alberta grain-livestock economy developed by Alberta Agriculture. The project had three components: (1) a survey of farmers as to their grain transportation behaviour to point of sale; (2) a cost model to assess the total cost of handling and shipping grain; and (3) a community impact analysis.

The major results of the survey of transportation behaviour suggest that: (1) farmers tend to make greater use of commercial trucks as distance increases; (2) if rail cost increased they would make greater use of trucks; and (3) if farmers had to pay for dockage (which they implicitly would do if they paid the full compensatory rate) more cleaning would be carried out in the prairies.

The cost-impact analysis developed five scenarios: (1) current practice - base case; (2) pay the producer with only output effects accounted for; (3) pay the producer and dockage remains on farm; (4) pay the producer and all grain is moved to West Coast; and (5) pay the producer with increased shipments to the U.S. The method used is counterfactual estimation for 1988. The results were summarised in the report as follows:

> ...the total cost of handling and transporting grain produced in Alberta in 1988 was $544 million. A change in the MOP would lead to an increase in overall grain production in Alberta of 323,000 tonnes (2.1%). On a regional basis, this would lead to an increase of 599,000 tonnes (9.2%) in the south, a decrease of 287,000 tonnes (-4.0%) in the central region, and a small increase of 10,000 tonnes (0.5%) in the north. On a commodity basis, wheat production would decrease by 3.2%, while oats, barley, and canola production would increase by 8.1%, 1.6% and 17.0% respectively. These production changes would result in a decrease of approximately $6 million (1.1%) in total grain handling and transportation costs. If dockage were kept on farms after a change in the MOP the cost savings would be approximately $15 million (2.7%). The elimination of cross hauls of Alberta grains after a change in MOP would lead to a cost saving of $40 million or 7.3%. If more canola and oats were shipped directly to the U.S., a cost saving of $25 million or 4.6% could be realised. The cumulative effect of all of these scenarios relative to the base case is a cost saving of approximately $75 million (13.5%). Had 25% or 100% of barley exports moved via truck to the U.S., rather than by rail to ports, the cost savings would have been even larger. (p. 2)

The final scenario is unique because it is the first explicit attempt to incorporate the possibility of grain exports to the U.S. as a result of the Canada-U.S. Trade Agreement (CUSTA).

The expected impact on rural communities was determined through the method of representative communities. The results suggest that community welfare is only marginally related to grain deliveries.

One of the most contentious of all the WGTA studies was the study released in September 1989 prepared by Alberta Agriculture and the

Alberta Wheat Pool (1989) (CSPES). The study followed a counterfactual approach for the period 1978-1988. The counterfactual assumption is that producers would be compensated for losses due to changes in the method of payment. Compensation covers the WGTA payment plus an adjustment for the so-called "dilution" factor. The dilution factor arises because low transportation costs put upward pressure on all grain prices, whether the grain is destined for export or domestic use. As the WGTA benefit pertains only to grain shipped to an export port, the payment is not sufficient to cover the entire loss from a price decline associated with a change in the method of payment. The difference is the dilution factor.

The model used in this study was disaggregated into seven regions in the province of Alberta. The results were as follows: (1) wheat production - decline of 4 percent; (2) barley production - increase of 2 percent; (3) canola production - increase of 17.5 percent; (4) cow herd - increase of 12 percent; (5) cattle inventories - increase of 23 percent; (6) sow numbers increase 5-10 percent; (7) an increase in gross revenues to both the grains and livestock sectors. These estimates were based on input price supply elasticities of 0.11 to 0.13 for livestock. The results were not accepted by the Alberta Wheat Pool members of the review committee. They had three major criticisms.

> First:
>
> The basic hypothesis of the study is that a change in the method of payment of the Crow Benefit, through its effect on the price of grain, will cause farmers to change their crop and livestock production patterns. The important assumption here is that price is a significant factor in terms of production. However, in a number of the grain supply equations the price of grain is not included as a variable. AWP (Alberta Wheat Pool) members of the committee feel that the study should accurately reflect how farmers make decisions and that to exclude price creates a bias in the equations and produces unreliable results. (p. xv)

Second, the model's estimates of feeder cattle inflows was considered overstated because they took no account of any policy initiatives to reduce interprovincial feeder cattle movements by other provincial governments. Third, the model predicted reduced feedlot margins simultaneously with investment to expand feedlots. This is theoretically inconsistent. The final result is that cropping pattern changes are probably underestimated and livestock expansion overestimated.

At the same time, two documents were released which explored the technical aspects of dilution. The Alberta Task Force Considering a Change in the Method of Payment (1989) and Anon (1989), did not include any economic analysis. A third technical document was produced by the Alberta Wheat Pool (1989) (CSPESC) in November 1989. This paper provides background information on the grain cleaning aspects of the GHTS which would be important in any pay-the-producer scheme. A pay-the-producer scheme which was not directly tied to the volume shipped would mean that the volume of grain shipped would become a much more important element in cost reduction. As grain is now cleaned at port this means that dockage is shipped to port adding to the volume shipped. To reduce the volume shipped, more grain could be cleaned on the prairies.

In September 1989, the Saskatchewan Wheat Pool (1989) (CSPESC) released a study. Little information is provided in the study regarding the analytical techniques used:

> In-house models were developed to estimate the economic effect on members of payment to the producer. Net farm income and implications for crops, cattle and hogs are developed. (p. 5)

Three scenarios were developed: (1) pay the producer in perpetuity; (2) an annuity payout of the benefit; and (3) abandonment. The farm level

results are as follows: (1) for an 1,100 acre cultivated farm in the black soil zone a decrease of $18,000 in net farm income from abandonment; (2) a decrease of $9,000 for a farm of similar size in the brown soil zone; (3) an increased net return of $26.76 per finished feeder; (4) an increased net return of $7.04 per market hog; and (5) transport's share of total operating costs would rise from 3-5 percent to 12-15 percent. The major provincial impacts would be: (1) abandonment would cost grain producers $400 million per year and pay the producer would cost them $135 million; (2) a benefit of $14 million and $7 million for the beef and hog sectors respectively from pay the producer; and (3) an increase of 380,000 in the number of beef cattle finished in the province from pay the producer. A further microeconomic study of the effects of a change in the method of payment on alfalfa production and processing was finished in September 1989 (Kulshreshtha and Story, 1989) (CSPESC).

A major group of studies of the GHTS in 1989 were those undertaken for the Agricultural Advisory Council in Manitoba. To date these consist of three interrelated discussion papers: (Deloitte Haskins & Sells, 1989a) (CSPES); (Deloitte Haskins & Sells, 1989b) (CSPES); and Deloitte Haskins & Sells, 1990) (CSPES). The authors start by laying out a large number of policy issues and alternative solutions but quickly admit that it is not possible to undertake a DDGE analysis with the resources available. The discussion provides the best up-to-date cataloging of the relevant issues. Ultimately, only two scenarios were developed: (1) pay the producer and distance related rates; and (2) pay the producer and commercial rail rates. The latter would set rail rates competitively with lower rates for farmers on main lines and higher rates for those on

less used lines. The expected result would be a greater use of trucking. The model uses a counterfactual "snapshot" approach for the year 1988. An econometric model was used; unfortunately, no details were provided on the estimated equations other than that they contain both own price and cross price effects. The discussion suggests long run grain price-livestock supply elasticities of between -3.0 and -3.5. They assume EXELINF for wheat but assume that only 50 percent of the increased freight cost would be reflected in the price of barley and 60 percent would be reflected in the price of canola. These discounts were determined on an ad hoc basis and are related to expectations of demand growth arising from increased economic activity.

The results of the Manitoba studies were as follows: (1) decreased wheat production of 1.6 percent; (2) increased barley production of 5.5 percent; (3) increased canola production of 2.9 percent; (4) increased cattle production of 24 percent; and (5) increased hog production of 28 percent. These effects are qualitatively discussed within the broader context of processing, job creation, rail/truck rationalisation, effects on the rural road network and effects on rural communities. Where quantitative estimates are provided they are of such a partial equilibrium nature that aggregate effects cannot be discerned. Of course, the estimates are restricted to Manitoba only.

In January 1990 the Agricultural Diversification Alliance (1989) (CSPES) released a report. In some senses, the title of the discussion paper, "Transforming the CROW" is a misnomer as the issues discussed pertain to wider aspects of the GHTS of which the WGTA method of payment is only a part. In terms of the WGTA, the document proposes that the Crow Benefit be bought out through the use of an annuity which would

be amortised over 25 years and paid out over 15 years. The paper uses EXELINF assumptions but the Committee preparing the report did not carry out any original quantitative research, rather they made a "preliminary and subjective assessment of its proposals" (pp. 2-3). The major conclusions of this assessment were as follows: (1) total grain and oilseed production will fall less than 1 percent; (2) some cropland will revert to pasture; (3) livestock production will increase by 400,000 beef cows, 500,000 slaughter cattle and 300,000 hogs; (4) over the long run gross farm income on the prairies should increase by $600 million per year; and (5) the net effect on the rural economy of the prairies will be positive. While the report did not include estimates of the effects on central Canada, it did affirm that changes in the method of payment would have no effect on grain, oilseed or pork prices in central Canada.

In 1990, Agriculture Canada commissioned a study to estimate the impacts on all major sectors of the Canadian agricultural industry, as well as on related secondary industries in the prairie provinces, of a number of policy options regarding the WGTA. Results of this study were released in early 1991 (Klein, et al., 1991) (DCSGE). The following policy options were analyzed with the CRAM and provincial input-output models:

(1) Continuation of Crow Offset Programs in all prairie provinces;

(2) Producers pay full compensatory rates but receive no compensation for loss of the Crow Benefit (assuming no efficiency gains in grain handling and transportation);

(3) Producers pay full compensatory rates but receive compensation in the form of an annuity as suggested by the Agricultural Diversification Alliance (1989);

(4) Producers pay full compensatory rates but receive continuous compensation on the basis of area cultivated (similar to the Gilson proposal (1982));

(5) The method of pooling transportation costs of grains is changed from a Thunder Bay to a lower St. Lawrence basis and producers pay either:

a) distance related, WGTA scale rates, or

b) full compensatory rates but receive compensation in the form of an annuity as suggested by the Manitoba Advisory Council (Deloitte Haskins & Sells, 1990).

In general, this study estimated relatively small impacts on production patterns and exports of prairie grains and oilseeds from increased freight rates, although some increase in low volume, high value crops (canola and flax) and some decrease in high volume, low value crops (barley and wheat) were projected. However, expected financial impacts on the crops sector could differ significantly, depending on the policy options. Payment of compensation to producers, either in the form of an annuity or in the form of a direct subsidy, as in the Gilson proposal, significantly enhanced net margins in the crop sector over the time period when the compensation was being paid. With St. Lawrence pooling, crop sectors in Alberta and Saskatchewan would gain while the crop sector in Manitoba would lose. On the other hand, land rental values would be significantly reduced, particularly in the black soil zone, from imposition of full compensatory rates, except in the case of the Gilson proposal where compensation would be related to production.

The study projected a modest expansion in the beef and hog herds in most provinces, including British Columbia and Ontario, from an increase in freight rates for prairie feedgrains. The largest provincial

changes would occur with the St. Lawrence pooling method where, with full compensatory rates, livestock production in Manitoba would be significantly enhanced and livestock production in Alberta would be reduced. Due to expansion of the livestock herds and reductions in price of feedgrains, large increases in net margins to the beef and hog sectors in western Canada were projected if higher freight rates were imposed.

Total economic welfare in Canada was projected to increase with all of the options analyzed in the study. The largest gain in economic welfare ($351 m) would occur where full compensatory rates were used in conjunction with the St. Lawrence pool. Other policy options had lower, though still significant, gains in total economic welfare over the base. Total economic welfare measured changes in taxpayer costs of related agricultural programs as well as changes in producers' net margins and consumer surplus.

The input-output analysis of the prairie provinces showed modest increases in the levels of secondary industrial activities from all of the policy options, except where producers receive no compensation (Option 2).

5. Conclusions

At the outset of this project it was the intent to provide a summary sheet where the results of the various studies examined could be tabulated and compared. As the review progressed it became evident that this was simply not feasible. Of the thirty-two studies considered it can be safely said that they exhibit so little commonality of analytical approach and assumptions, so little convergence in geographic areas or products included, and so little overlap in the time periods considered,

that they constitute a basket of fruit far more diverse than the traditional concept of "apples and oranges." Their results simply cannot be compared without misleading the reader. This does not mean that the studies of the GHTS are poorly done or that their conclusions are faulty within the assumptions made and limitations of the analytical approaches chosen. In most cases, they were undertaken to answer specific questions for specific clients and were never intended to provide information which could be used in an evaluation undertaken for broadly defined public policy objectives.

Qualitatively, there is a virtual consensus regarding: (1) the effects of the current WGTA arrangements; (2) the effects of changing the method of payment so that producers are compensated directly - although there are as many proposals as studies; and (3) on the effects of abandonment whether through a buy out or discontinuation. There is not necessarily even disagreement over the magnitudes, as there have been no direct comparisons of the results of one study by the authors of other studies. It is simply that differences in analytical approaches, assumptions, etc., have led to different magnitudes of estimated impacts.

Further, many of the studies are dated, particularly those which are more useful (DLDGE, ADGE, DPEC, DPES) in the public policy context. The more up-to-date studies tend to be less useful methodologically (CSPEC, CSPES, CSPESC). In reality, there are no studies which are sufficiently broad based and which have been completed since the deterioration of international grain prices.

The deficiencies aside, the major weaknesses of the existing studies is what they do not include. These omissions, in reality, are

what is required for a comprehensive public policy review. They are as follows:

(1) The effect on railway efficiency of WGTA payments to the railways.

The WGTA payments to the railways have been made for half a decade. While various studies allude to the increased efficiency which would arise from further rail line abandonment there is no discussion of the benefits which should arise in the rail system from the pay the railway system of subsidies. This is important for two reasons. First, if there have been efficiency effects they should be explicitly factored into the projections on grain transportation costs. This could be particularly important for any discussions on the level of compensation for a buy out option. Second, if there have not been efficiency effects, then more reliance on market forces to induce improvements might be contemplated. This suggests an implicit endorsement of some form of "pay the producer." None of the studies reviewed addressed this issue.

(2) Price forecasts which take into account the effect of the continuation of the subsidy war between the U.S. and the EC.

Even if the GATT negotiations in the Uruguay Round turn out to be successful, it is unrealistic to believe that either the U.S. or EC will be able to dismantle their export subsidy systems immediately. A long phase out is more likely. The result will be that grain prices will continue to be low and, hence, prairie farm incomes will remain depressed. Under such conditions any suggested phase out or abandonment of the grain transportation subsidy in western Canada is likely to be fiercely resisted for two reasons. First, the ability of producers to pay will remain constrained. Even if grain prices increase, farmers' incomes will not improve as it will simply mean a reduction of subsidies.

With such projections, the timing of any change in the Crow Benefit should perhaps be related to the economic recovery of farmers. Of course, depressed prices might make an annuity with a long amortisation period and a short payout period more attractive. The second reason why changes to the existing WGTA payments might be resisted in the case of continued depressed prices is the "safety net" provisions which may become binding with inflationary freight costs and stable prices. This has not been adequately addressed in any of the studies and may have considerable budgetary ramifications and distortionary effects regardless of the method of payment.

(3) The dynamic effects on farmers' assets should be included in any analysis.

Whatever scenarios are developed regarding future changes to the WGTA, it is the effect on farmers' asset positions which is of long term importance. The effect on assets influences both farm survival and the ability to finance both investments and operations.

(4) Policy options should be examined within a dynamic context.

Comparative snapshots do not provide sufficient information in the public policy context because they obscure the paths of adjustment. Since future streams of income are discounted, the weight of any policy change is diminished over time. Without information on paths of adjustment it is not possible to discuss issues such as changes in payment streams, the effect of relative rates of inflation and the speed with which livestock operations, in particular, can adjust.

(5) The effect of an open border with the U.S. should be explicitly modeled.

Under a set of conditions set out in the CUSTA, there could be an opening of the border for grain trade. This could have significant

ramifications for the GHTS, including reduced east or west movements as a result of diversion of grain to the U.S. both for consumption in the U.S. and possibly for export through the U.S. system. This could affect the size of the Crow Benefit as well as the efficiency of the existing GHTS. Also, grain could move into Canada thereby putting a ceiling on local prices of grains.

In short, the existing examinations of the WGTA-GHTS have not been either sufficiently dynamic in their analysis or cognisant of the effects of changes to the grain economy to be of significant use to a major policy review. If the above changes are included in future analyses it will provide a framework within which to analyse any policy scenario.

REFERENCES

Abouchar, A. (1977), An Economic Analysis of the Hall Commission Report, Discussion Paper, Ontario Economic Council, Toronto.

Agricultural Diversification Alliance (1989), Transforming the Crow, Calgary (CSPES).

Agriculture Canada (1984), Production and Marketing Responses to Alternative Methods of Payment, Working Paper 7/85, Food Markets Analysis Division, Marketing and Economics Branch, Ottawa (DLDGE).

Agriculture Canada (1985a), Agricultural Impacts of Alternative Methods of Payment - Synopsis, prepared for the Committee of Inquiry on Crow Benefit Payment, Ottawa (DLDGE).

Agriculture Canada (1985b), Aggregate Farm Income Impact of Alternative Methods of Crow Benefit Payment, a paper prepared for the Committee of Inquiry on Crow Benefit Payment, Regional Development Branch, Ottawa (DLDGE).

Alberta Agriculture and the Alberta Wheat Pool (1989), Impact of Change to a Pay the Producer Method of Payment on Alberta's Grain and Livestock Sectors, Edmonton (CSPES).

Alberta Task Force Considering a Change in the Method of Payment (1989), Dilution, Edmonton.

Alberta Wheat Pool (1989), Facts on Cleaning Grain, a report to Alberta Agriculture, Calgary (CSPESC).

Anon (1989), Outline of an Administrative Mechanism for a Pay the Producer Method of Payment Program, Edmonton.

Arcus Consulting Limited (1985), An Analysis of Alternative Methods of Paying the Government Commitment to the Costs of Grain

Transportation by Rail Under the Western Grain Transportation Act, prepared for Canadian Co-operative Wheat Producers, Vancouver (CSPESC).

Baldwin, R.L. (1985), The Distribution of Grain Handling and Transportation Costs of Prairie Farmers From 1977/78 to 1995/96, Canadian Transport Commission, Ottawa (LDPESC).

Boyd, R.B. (1986), Grain Transportation and Railway Efficiency Gains, in Wilson, A.G. (ed.), proceedings of a Workshop on Grain Transportation Research, Occasional Paper No. 3, University of Manitoba Transport Institute, Winnipeg.

Canadian Grains Council (1985), The Structure of the Feed Grain Market in Canada, Winnipeg (CSPESC).

Craig, D.J. (1986), Recent and Potential Efficiency Gains in Grain Related Rail Operations: Focus on Branch Lines, in Wilson, A.G. (ed.), proceedings of a Workshop on Grain Transportation Research, Occasional Paper No. 3, University of Manitoba Transport Institute, Winnipeg.

Davey, B. and Kirk, B. (1984), The Effect of Bill C-155 on Canadian Livestock Production, Food Marketing Commentary, Vol. 6 (1), pp. 19-23 (CSPEC).

Deloitte Haskins & Sells (1989a), Impacts of a Change in the Method of Payment: A Discussion Paper, prepared for the Agricultural Advisory Council, Winnipeg (CSPES).

Deloitte Haskins & Sells (1989b), Discussion Paper #2: Impacts of a Change in the Method of Payment, prepared for the Agricultural Advisory Council, Winnipeg (CSPES).

Deloitte Haskins & Sells (1990), Discussion Paper #3: Impacts of a Change in the Method of Payment of the Crow Benefit, prepared for the Agricultural Advisory Council, Winnipeg (CSPES).

Fulton, M., Rosaasen, K. and Schmitz, A. (1989), Canadian Agricultural Policy and Prairie Agriculture, Economic Council of Canada, Ottawa (DPES).

Furniss, I.F. (1984), Impact on Selected Farm Input Industries of Alternative Methods of Crow Benefit Payment, prepared for Inputs and Technology Division, Regional Development Branch, Agriculture Canada, Ottawa (CSPESC).

Gilson, J.C. (1982), Western Grain Transportation, Report on Consultations and Recommendations, Minister of Supply and Services, Ottawa.

Grain Transportation Agency (1985), Review of the Western Grain Transportation Act, Winnipeg (CSPESC).

Harvey, D.R. (1980), Christmas Turkey or Prairie Vulture?, The Institute for Research on Public Policy, Montreal (LDPES).

Harvey, D.R. (1981), Government Intervention and Regulation in the Canadian Grains Industry, Technical Report E/16, Economic Council of Canada, The Institute for Research on Public Policy, Ottawa (LDPES).

Harvey, D.G. (1982), An Economic Analysis of the Crowsnest Pass Freight Rates Re-Visited, Working Paper, Agriculture Canada, Ottawa (DLDGE).

(HCR) (1977), Grain and Rail in Western Canada, The Report of the Grain Handling and Transportation Commission (Hall Commission), Vols. I and II, Winnipeg.

(HCR) (1985), The Report of the Committee of Inquiry on Crow Benefit Payment (Hall Committee), Winnipeg (DLDGE).

Hollander, A. (1984), The Egg and Poultry Industries Under Crow Change, University of Montreal.

Kirk, B. (1983), Agricultural Impacts of Crow Change, Agriculture Canada, Ottawa (DLDGE).

Klein, K.K., Fox, G., Kerr, W.A., Kulshreshtha, S.N. and Stennes, B., Regional Implications of Compensatory Freight Rates for Prairie Grains and Oilseeds, Agriculture Canada, 1991.

Kulshreshtha, S.N. and Storey, G.G. (1989), The Impact of Alternative Crow Benefit Payment Methods on Canadian Alfalfa Production and Processing, report submitted to the Canadian Dehydrators Association, Tisdale (CSPESC).

Lerohl, M.L., Anderson, M.S., Apedaile, L.P., Richter, J.J., Gill, D.S., Hawkins, M.H. and Veeman, M.M. (1984), Consequences of Alternative Methods of Payment of the Crow Benefit, Department of Rural Economy, University of Alberta, Edmonton (CSPES).

Lerohl, M.L., Apedaile, L.P., Tyrchniewicz, E.W. and Nakamura, M.L. (1989), Impact of Changes in the Method of Payment of the Crow Benefit on Grain Handling and Transportation Efficiency in Alberta, prepared for Alberta Agriculture and Alberta Economic Development and Trade, Edmonton (CSPESC).

Lucas, R.E. (1976), Econometric Policy Evaluation: A Critique, in Brunner, K. and Mezler, A. (eds.), Volume I of the Carnequie Rochester Conference on Public Policy, Supplementary Series to the Journal of Monetary Economics.

MacEachern, G.A. (1978), Retention of the Crow Rate and the Alberta Livestock Economy, prepared for the Alberta Cattle Commission, Calgary (CSPESC).

MacGregor, R.J. and Graham, J.D. (1988), The Impact of Lower Grains and Oilseed Prices on Canada's Grain Sector: A Regional Programming Approach, Canadian Journal of Agricultural Economics, Vol. 36, pp. 51-67 (DPEC).

McQueen, D. (1986), Gainers and Losers in Grain Transportation Policy Changes: A Public Choice Analysis, in Wilson, A.G. (ed.), proceedings of a Workshop on Grain Transportation Research, Occasional Paper No. 3, University of Manitoba Transport Institute, Winnipeg.

Narayanan, S. and Atcheson, J. (1985), Farm Level Impacts of Alternative Methods of Crow Benefits Payment, Regional Development Branch, Agriculture Canada, Ottawa (CSPESC).

Norrie, K.H. and Percy, M.B. (1983), Freight Rate Reform and Regional Burden: A General Equilibrium Analysis of Western Freight Proposals, Canadian Journal of Economics, XVI (2), pp. 325-349 (ADGE).

Saint-Louis, R. (1984), Developments in Eastern Canada's Feed Grain Sector Since the First Revision of the Statutory Crowsnest Pass Rate Structure, Laval University, Quebec.

Saskatchewan Wheat Pool (1989), The Crow Benefit: Implications of Change, Saskatoon (CSPECS).

Schweitzer, T.T. (1984), Old Myths and New Choices: Railway Freight Rates and Western Economic Development, Discussion Paper No. 269, Economic Council of Canada, Ottawa (CSPEC).

Schmitz, A. and Rosaasen, K. (1986), Changing Grain Freight Rates and the Impact on Livestock, in Wilson, A.G. (ed.), proceedings of a Workshop on Grain Transportation Research, Occasional Paper No. 3, University of Manitoba Transport Institute, Winnipeg (CSPES).

(SCR) (1977), Report, Commission on the Costs of Transporting Grain by Rail, Minister of Supply and Services, Vol. I, 1976, Vol. II, 1977.

Snavely, King and Associates (1978), 1977 Costs and Revenues Incurred by the Railways in the Transportation of Grain Under Statutory Rates, a report prepared for the Grain Transportation Branch, Transport Canada, Washington, D.C.

Tyrchniewicz, E.W. (1984), Western Grain Transportation Initiatives: Where Do We Go From Here?, Canadian Journal of Agricultural Economics, Vol. 32, pp. 253-268.

Tyrchniewicz, E.W., Framington, C.F., MacMillan, J.A. and Craven, J.W. (1978), The abandonment of Uneconomic Branch Lines and Unremunerative Grain Rates: Effects on Agriculture and Regional Development, The Logistics and Transportation Review, Vol. 14, No. 4, pp. 441-431 (CSPES).

APPENDIX 1

Farm Organisations Contacted Regarding WGTA Study

On the following page is a copy of the letter sent to farm organisations across Canada. On the next page is a complete list of the organisations contacted.

Dear Mr./Ms.

I am leading a team of researchers who are working with Agriculture Canada officials on a re-examination of the provisions of the Western Grain Transportation Act. We have two main objectives:

(1) review previous studies in light of developments which have occurred since the studies were completed; and

(2) analyse the impacts on all major agricultural sectors and regions in Canada of a change in method of payment of the "Crow Benefit".

We are aware of many studies that have been done on this topic. However, there may be some studies or position papers that have escaped our attention. Since any change in the method of payment of the "Crow Benefit" would surely have an impact on your industry, could you please send me a copy of any studies or position papers that your organisation may have developed on this issue.

Thank you for any assistance you can provide. Our study is due to be completed by the end of June 1990. It is intended that the results be made public as soon thereafter as possible.

Yours truly,

K.K. Klein
Professor of Economics

List of Organisations Contacted

Atlantic Farmers' Council
Bakery Council of Canada
Beef Information Centre
B.C. Federation of Agriculture
Canada Grains Council
Canadian Broiler Council
Canadian Cattlemen's Association
Canadian Chicken Marketing Agency
Canadian Dehydrators' Association
Canadian Egg Marketing Agency
Canadian Federation of Agriculture
Canadian Feed Industry Association
Canadian Fertilizer Institute
Canadian Forage Council
Canadian Horticulture Council
Canadian Meat Council
Canadian Pork Council
Canadian National Millers' Association
Canadian Seed Growers' Association
Canadian Seed Trade Association
Canadian Special Crops Association
Canadian Turkey Marketing Agency
Canola Council of Canada
Dairy Farmers of Canada
Flax Council of Canada
Further Poultry Processors' Association of Canada
Maritime Farmers' Union
National Farmers' Union
Ontario Cattlemen's Association
Ontario Corn Producers' Association
Ontario Federation of Agriculture
Ontario Soybean Growers' Marketing Board
Ontario Wheat Producers' Marketing Board
Prairie Canola Growers' Council
Prairie Pools Inc.
Saskatchewan Association of Rural Municipalities
Saskatchewan Wheat Pool
Unifarm
L'Union des producteurs agricoles
Western Barley Growers' Association
Western Canada Wheat Growers
Western Canada Pulse Growers' Association
XCan Grain Ltd.

APPENDIX 2

Organisations Which Responded to the Letter Regarding the WGTA Study

Organisations Which Responded to the Letter Regarding the WGTA Study

Atlantic Farmers' Council
Bakery Council of Canada
Canada Grains Council
Canadian Cattlemen's Association
Canadian Chicken Marketing Agency
Canadian Dehydrators' Association
Canadian Forage Council
Canadian National Millers' Association
Canadian Seed Growers' Association
Canadian Seed Trade Association
Canadian Turkey Marketing Agency
Dairy Farmers of Canada
Flax Council of Canada
Further Poultry Processors' Association of Canada
National Farmers' Union
Ontario Cattlemen's Association
Ontario Corn Producers' Association
Ontario Soybean Growers' Marketing Board
Saskatchewan Wheat Pool
Unifarm
Western Barley Growers' Association
Western Canada Pulse Growers' Association
XCan Grain Ltd.

APPENDIX 3

Response of Farm Groups Contacted Regarding WGTA Study

Response of Farm Groups Contacted Regarding WGTA Study

The responses of those farm groups who replied to the letter outlining the current WGTA study were varied both in length and in their concerns. While the opinions expressed regarding the grain transportation system were wide ranging, none of the groups who responded had undertaken any research on the WGTA which had not been covered in this review of studies. A number of groups suggested that studies already included in this review be consulted. Basically, farm groups and organisations, for the most part, did not appear to have sufficient resources to undertake independent research.

A number of groups had prepared position papers on the WGTA but these clearly relied upon the existing body of research for their information. None of the position papers submitted suggested new or different options for changes to the WGTA that were not included in the research reports examined in this review. There were certain groups, such as the Canadian Seed Trade Association, who wished their interest in having "forage seed in sacks" added to Schedule I of the WGTA to be known by readers of this report. Most groups took a fairly broad based approach, suggesting that grain transportation issues should be examined within the context of the broader system. Those who accepted that reform was desirable, suggested that any reform should not include simply the question of method of payment, but reform of the entire grain handling and transportation system.

The authors would like to thank all those who took the time to respond for their thoughtful and articulate comments.